X 231

Excavator

Service Manual

(S/N 508912001 & Above)

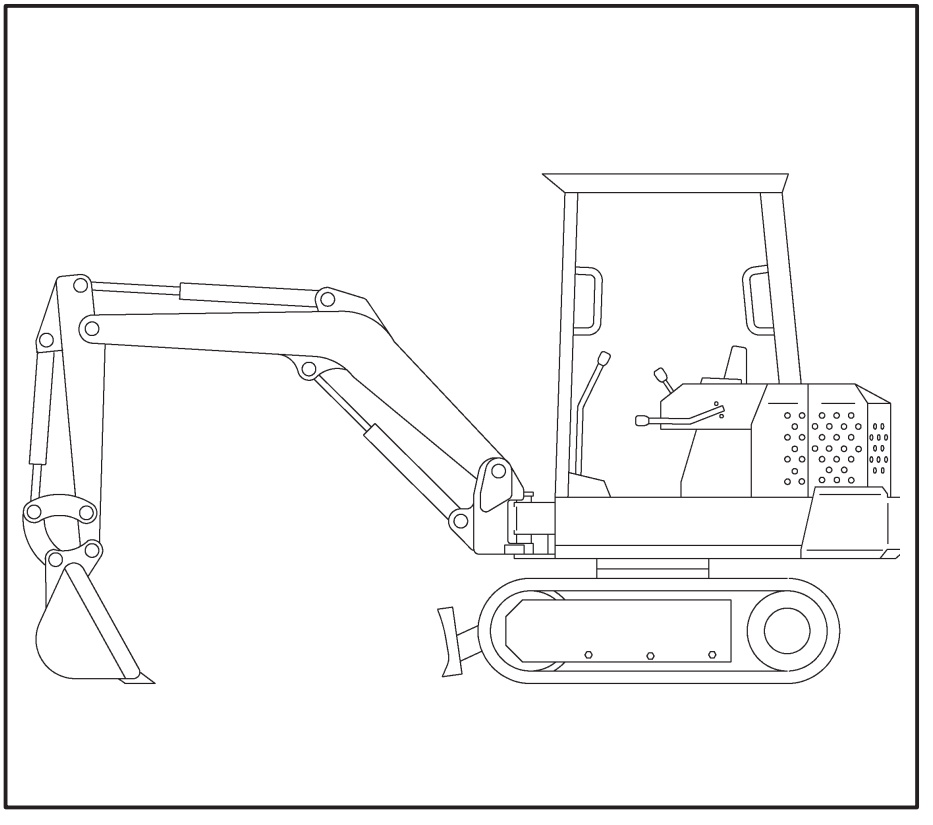

CONTENTS

SAFETY i
PREVENTIVE MAINTENANCE 1–1
HYDRAULIC SECTION 2–1
DRIVE SECTION 3–1
UPPER WORKS & SWING SECTION 4–1
MAIN FRAME & TRACKS 5–1
ELECTRICAL SYSTEM 6–1
ENGINE SERVICE 7–1
TECHNICAL DATA 8–1

Thank you so much for reading.

Please click the “Buy Now!” button below to download the complete manual.

After you pay.

You can download the most perfect and complete manual in the world immediately.

Our support email:

ebooklibonline@outlook.com