Fig. 011 CYLINDER BLOCK

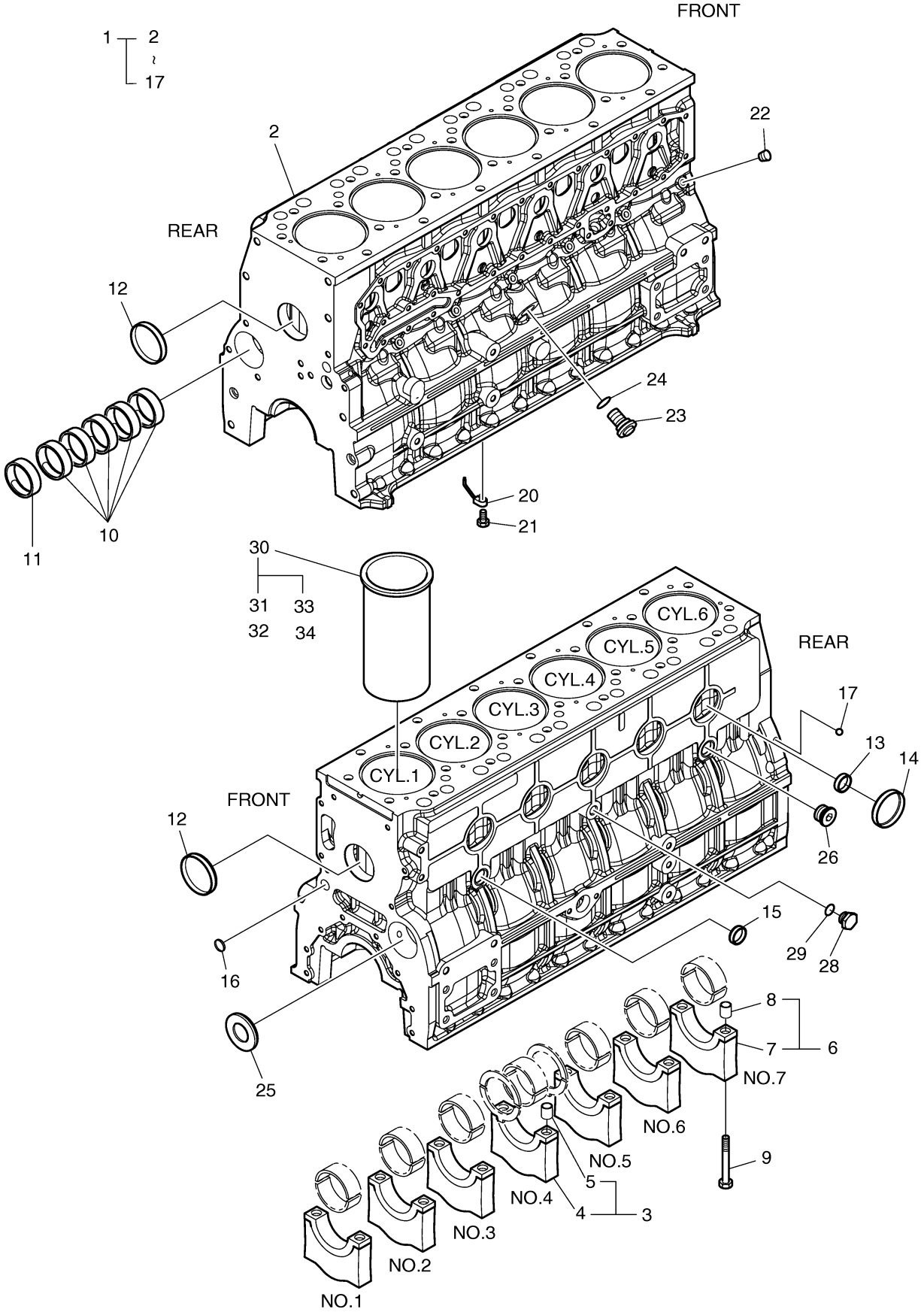

DOOSAN Doosan Infracore

Fig. 011 CYLINDER BLOCK

Key No	Part No	Description	Qty	S.C	Serial No	ICA	Replacable	Qty
1	65.01101-6085B	CYLINDER BLOCK ASS'Y	1		~070611	I	65.01101-6092A	1
1	65.01101-6092A	CYLINDER BLOCK ASS`Y	1		070612~090729	Y	150102-00037	1
1	150102-00037	CYLINDER BLOCK ASS'Y	1		~110524	Y	150102-00037A	1
1	150102-00037A	BLOCK,CYLINDER	1		110525~			
1A	65.01101-0054	CYLINDER BLOCK	1	D	~070611			
1A	65.01101-0054A	CYLINDER BLOCK	1	D	~110524			
1A	150102-00373	BLOCK,CYLINDER	1	D	110525~			
1B	65.01105-6005B	BEARING CAP ASS`Y(No:3)	1	D	~090729			
1B	140202-00016	THRUST BEARING CAP ASS'Y	1	D	090730~			
1BA	65.01105-1051B	CAP;BEARING	1	D	~090729			
1BA	140202-00017	BEARING CAP;THRUST	1	D	090730~			
1BB	65.91710-0001	RING;STOPPER	2					
1C	65.01105-6006B	BEARING CAP ASS`Y	6	D	~090729			
1C	140202-00018	BEARING CAP ASS'Y	6	D	090730~			
1CA	65.01105-1052B	CAP;BEARING	1	D	~090729			
1CA	140202-00019	BEARING CAP	1	D	090730~			
1CB	65.91710-0001	RING;STOPPER	2					
1D	65.90020-0066A	BOLT;BRG CAP	14					
1E	65.04410-0021A	BUSH;CAMSHAFT	6	B				
1F	65.04410-0022	BUSH;CAMSHAFT	1	B				
1G	65.90302-0009	PLUG;CORE	2					
1H	65.90302-0042	PLUG;CORE	8					
1I	65.90302-0034	PLUG;CORE	5					
1J	65.90302-0041	PLUG;CORE	1					
1K	65.91606-0041	PLUG;CORE	2					
1L	06.31641-0618	BALL;STEEL	1					
10	65.01601-5020	OIL SPRAY NOZZLE ASS'Y	6					
11	65.05401-5031	RELIEF VALVE ASS'Y	6					
12	65.90320-0022	PLUG SCREW PT1/8	1					
13	65.91001-0013A	PIN;CORE	6					
14	65.05401-5002F	RELIEF VALVE ASS'Y	1		~070416	Y	65.05401-5002G	1
14	65.05401-5002G	RELIEF VALVE	1		070417~			
15	06.56021-0102	O-RING	1					
16	65.91605-0002	COVER;CORE HOLE	1					
17	65.90310-0134	SCREW;PLUG	1					
18	65.90310-0135	PLUG;SCREW	1					

Key No	Part No	Description	Qty	S.C	Serial No	ICA	Replacable	Qty
19	06.56190-0705	RING;SEAL	1					
20	65.01201-0075A	CYLINDER LINER-GRADE	6	D				
21	65.01201-0076	LINER;CYLINDER-1A	6					
22	65.01201-0077	LINER;CYLINDER-1B	6					
23	65.01201-0078	LINER;CYLINDER-2A	6					
24	65.01201-0079	LINER;CYLINDER-2B	6					

Fig. 012 TIMING GEAR CASE

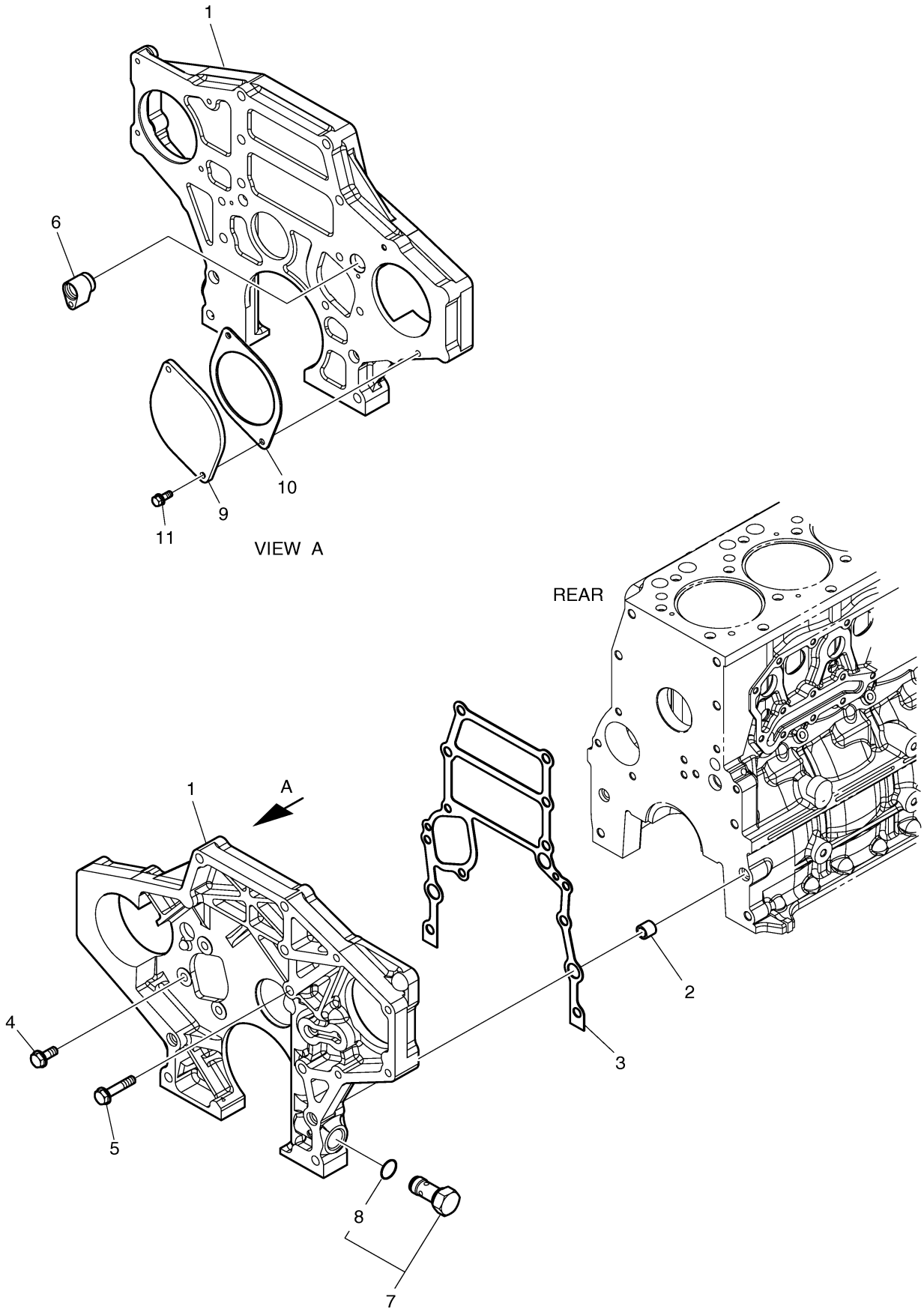

DOOSAN Doosan Infracore

Fig. 012 TIMING GEAR CASE

Key No	Part No	Description	Qty	S.C	Serial No	ICA	Replacable	Qty
1	65.01304-0029	CASE;TIMING GEAR	1		~070515	Y	65.01304-0029A	1
1	65.01304-0029A	CASE;TIMING GEAR	1		070516~			
2	65.91710-0016	RING;STOPPER	2					
3	65.01903-0034	GASKET	1					
4	65.90020-0063B	BOLT;HEX M10X25	3					
5	65.90020-0080	BOLT;COLLARED HEX.	1					
6	65.98130-0241	ADAPTER	1					
7	65.05401-5032	RELIEF VALVE ASS'Y	1		~090319	Y	65.05401-5032A	1
7	65.05401-5032A	RELIEF VALVE ASS`Y	1		~091116	I	410127-00040	1
7	410127-00040	RELIEF VALVE ASS'Y	1		091117~			
7A	65.96501-0074	O-RING	1					
8	65.91601-0011	COVER	1					
9	65.38901-0018A	GASKET;PTO	1					
10	06.01943-3318	BOLT ASS'Y M12X1.5X35	2					

Fig. 013 FLYWHEEL HOUSING

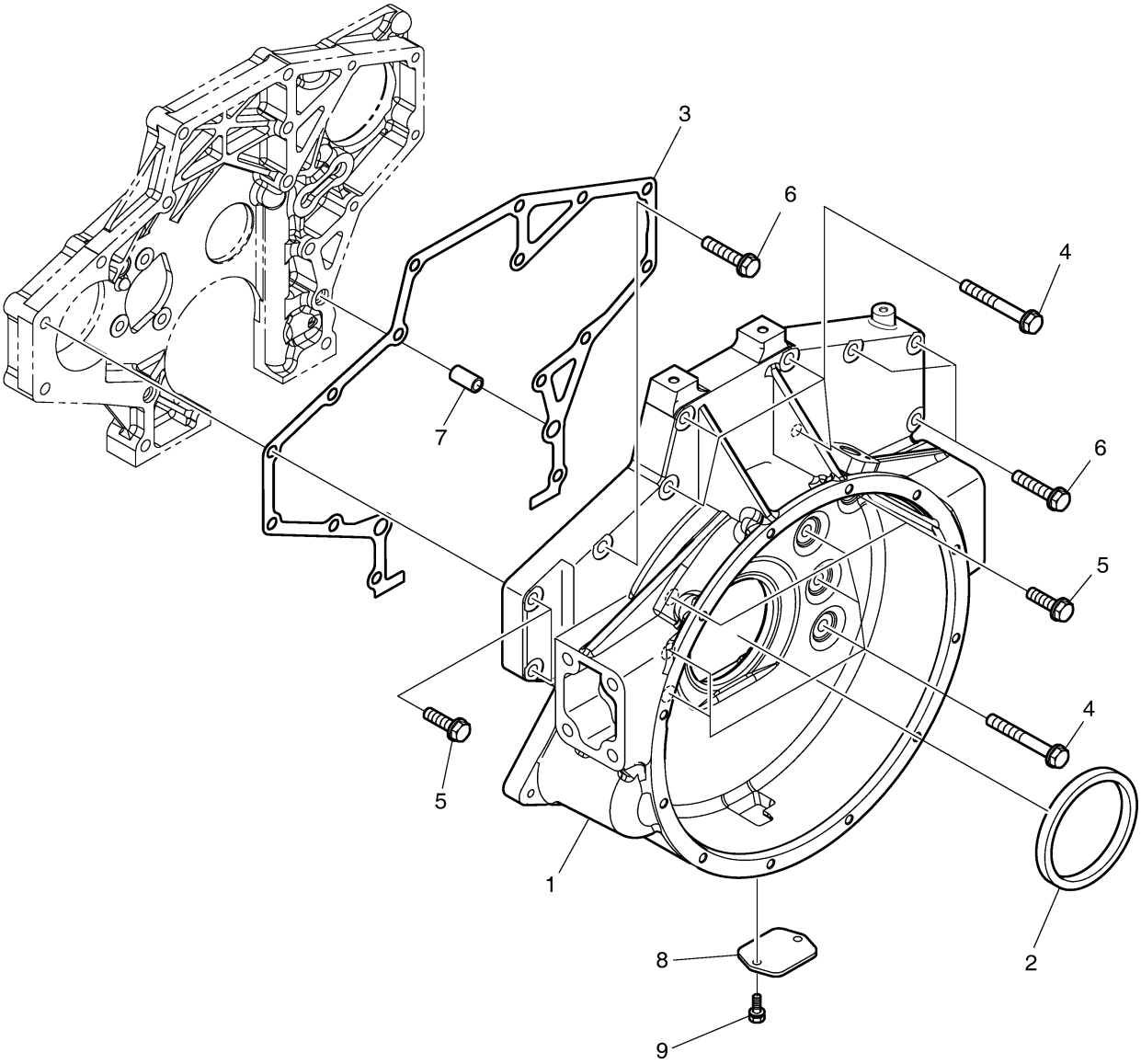

DOOSAN Doosan Infracore

Fig. 013 FLYWHEEL HOUSING

Key No	Part No	Description	Qty	S.C	Serial No	ICA	Replacable	Qty
1	65.01401-0253A	HOUSING;FLYWHEEL	1		~070312	Y	65.01401-0253B	1
1	65.01401-0253B	HOUSING;FLYWHEEL	1		~110523	I	150114-00097A	1
1	150114-00097A	HOUSING ASSY,FLYWHEEL	1		~111017	I	150114-00097B	1
1	150114-00097B	FLYWHEEL HOUSING ASS'Y	1		111018~			
2	65.01510-0040	SEAL;OIL	1					
3	65.01904-0032	GASKET	1		~110523	I	400613-00006	1
3	400613-00006	GASKET;F.W.H	1		110524~			
4	65.90020-0100	BOLT, 103mm	9					
5	65.90020-0101	BOLT, 57mm	4					
6	65.90020-0105	BOLT, 67mm	4					
7	65.91710-0009	RING;STOPPER	2					
8	65.01414-0004A	COVER	1					
9	06.01923-3111	BOLT, M8X16	2					

Fig. 014 OIL SEAL

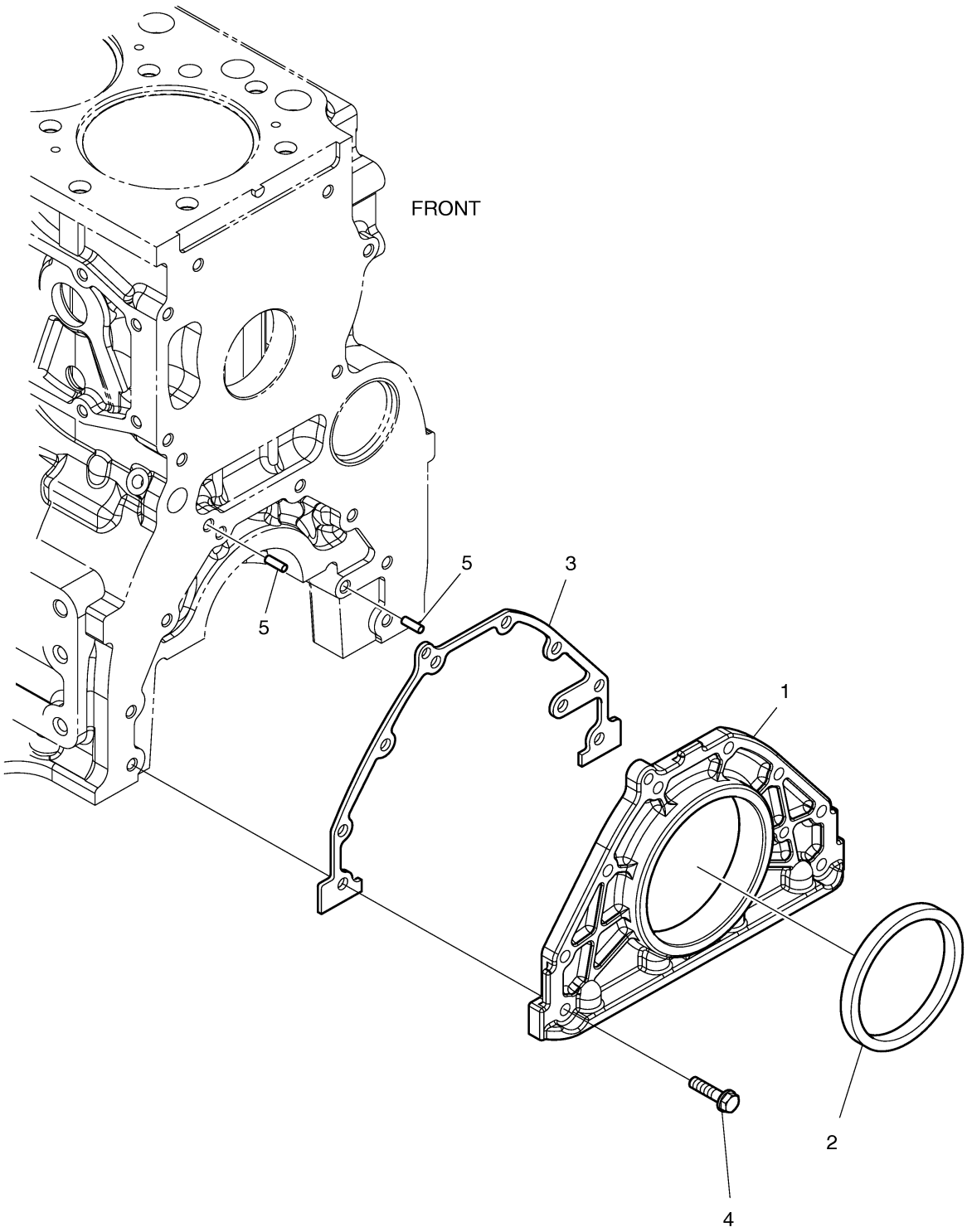

DOOSAN Doosan Infracore

Fig. 014 OIL SEAL

Key No	Part No	Description	Qty	S.C	Serial No	ICA	Replacable	Qty
1	65.01501-5003A	COVER;SEALING	1					
2	65.01510-0157	SEAL;OIL	1					
3	65.01905-0009	GASKET	1					
4	06.01923-3116	BOLT ASS'Y M8X28	8					
5	06.22022-1063	PIN	2					

Fig. 015 BREATHER [100530]

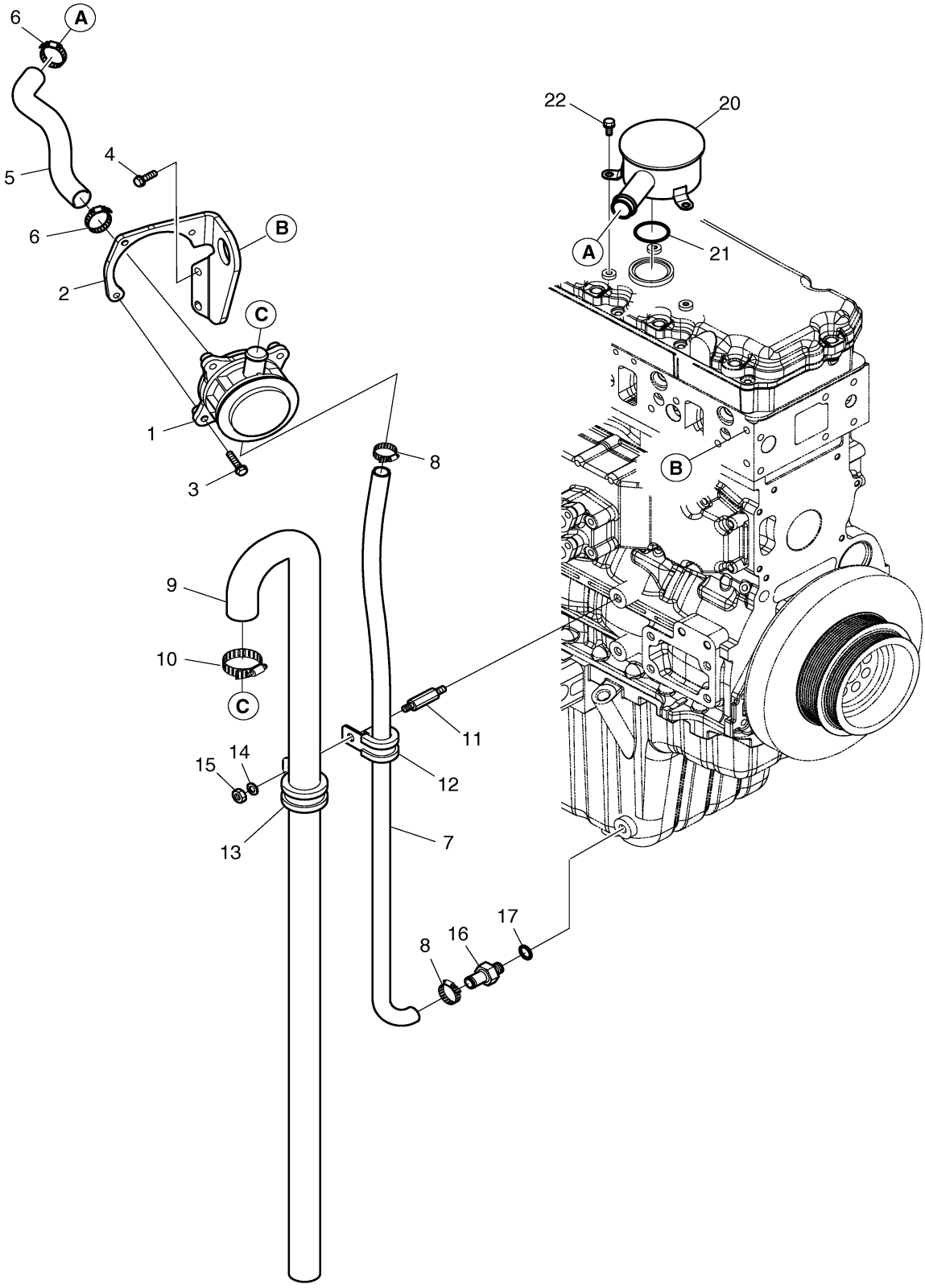

DOOSAN Doosan Infracore

Fig. 015 BREATHER [100530]

Key No	Part No	Description	Qty	S.C	Serial No	ICA	Replacable	Qty
1	65.01801-5100	HOUSING;BREATHER	1					
2	65.01840-0017	BRACKET;BREATHER PIPE	1					
3	06.01923-3114	BOLT ASS'Y M8X22	3					
4	06.01924-3217	BOLT ASS'Y M10X30	2					
5	65.96301-0478	HOSE;RUBBER	1					
6	06.67020-0105	CLAMP;HOSE	2					
7	65.96301-0455A	HOSE;RUBBER	1					
8	65.97440-0005	CLAMP;HOSE	2		~070419	Y	65.97402-0025	2
8	65.97402-0025	CLAMP;HOSE	2		070420~			
9	65.96301-0441	HOSE;RUBBER	1		~061220	Y	65.96301-0441A	1
9	65.96301-0441A	HOSE;RUBBER	1		061221~			
10	06.67020-0105	CLAMP;HOSE	1					
11	65.90201-0122	BOLT;STUD	1					
12	65.97401-5024	CLIP;PIPE	2					
13	65.97401-5019	CLIP;PIPE	1					
14	06.16731-2107	WASHER	1					
15	06.11063-8214	NUT	1					
16	65.98131-0119	NIPPLE	1					
17	06.56190-0719	RING;SEAL	1					
20	65.01801-5043A	HOUSING;BREATHER	1					
21	65.96501-0033B	O-RING	1					
22	06.01923-3111	BOLT, M8X16	3					

Fig. 015A BREATHER [110530]

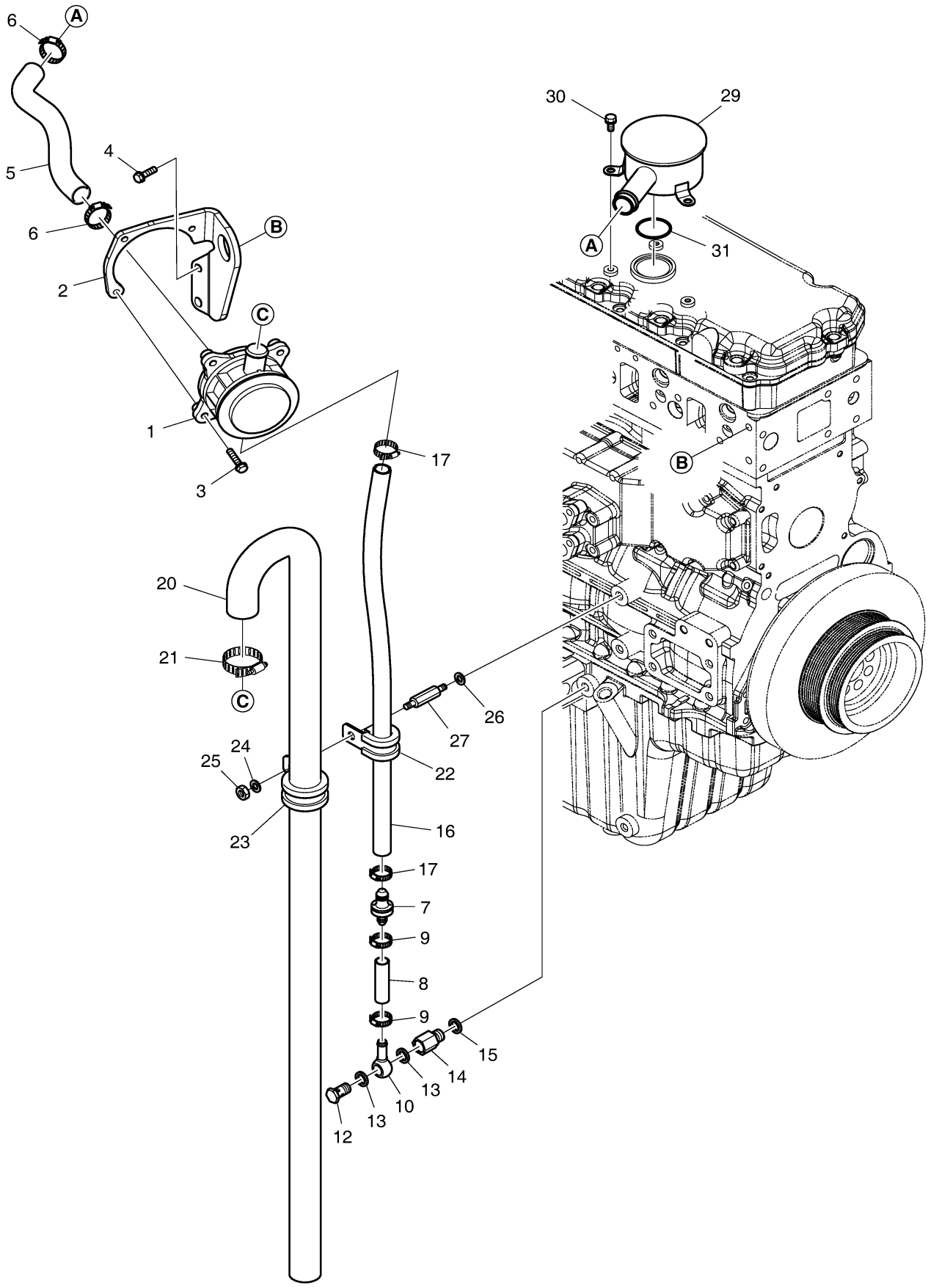

DOOSAN Doosan Infracore

Fig. 015A BREATHER [110530]

Key No	Part No	Description	Qty	S.C	Serial No	ICA	Replacable	Qty
1	65.01801-5100	HOUSING;BREATHER	1					
2	65.01840-0017	BRACKET;BREATHER PIPE	1					
3	06.01923-3114	BOLT ASS'Y M8X22	3					
4	06.01924-3217	BOLT ASS'Y M10X30	2					
5	420101-00070	HOSE,AIR	1					
6	06.67020-0105	CLAMP;HOSE	2					
7	410104-00025	CHECK VALVE ASS'Y	1					
8	65.96301-0535	HOSE;RUBBER	1					
9	65.97402-0015	CLIP;HOSE	2					
10	65.01802-5047	PIPE,BREATHER;FOR DRAIN	1					
12	06.78144-8404	SCREW;HOLLOW	1					
13	06.56190-0706	SEAL RING A14X20	2					
14	65.98130-0139A	ADAPTER;INJ. PUMP OVER	1					
15	06.56190-0706	SEAL RING A14X20	1					
16	420108-00252	HOSE,RUBBER	1					
17	65.97402-0025	CLAMP;HOSE	2					
20	65.96301-0441A	HOSE;RUBBER	1					
21	06.67020-0105	CLAMP;HOSE	1					
22	65.97401-5024	CLIP;PIPE	1					
23	65.97401-5019	CLIP;PIPE	1					
24	06.16731-2107	WASHER	1					
25	06.11063-8214	NUT	1					
26	06.16731-2108	WASHER;SPRING	1					
27	65.90201-0122	BOLT;STUD	1					
29	110972-00005	HOUSING;BREATHER	1					
30	06.01923-3113	BOLT ASS'Y M8X20	3					
31	401002-00082	O-RING	1					

Fig. 015B BREATHER [110531 ~]

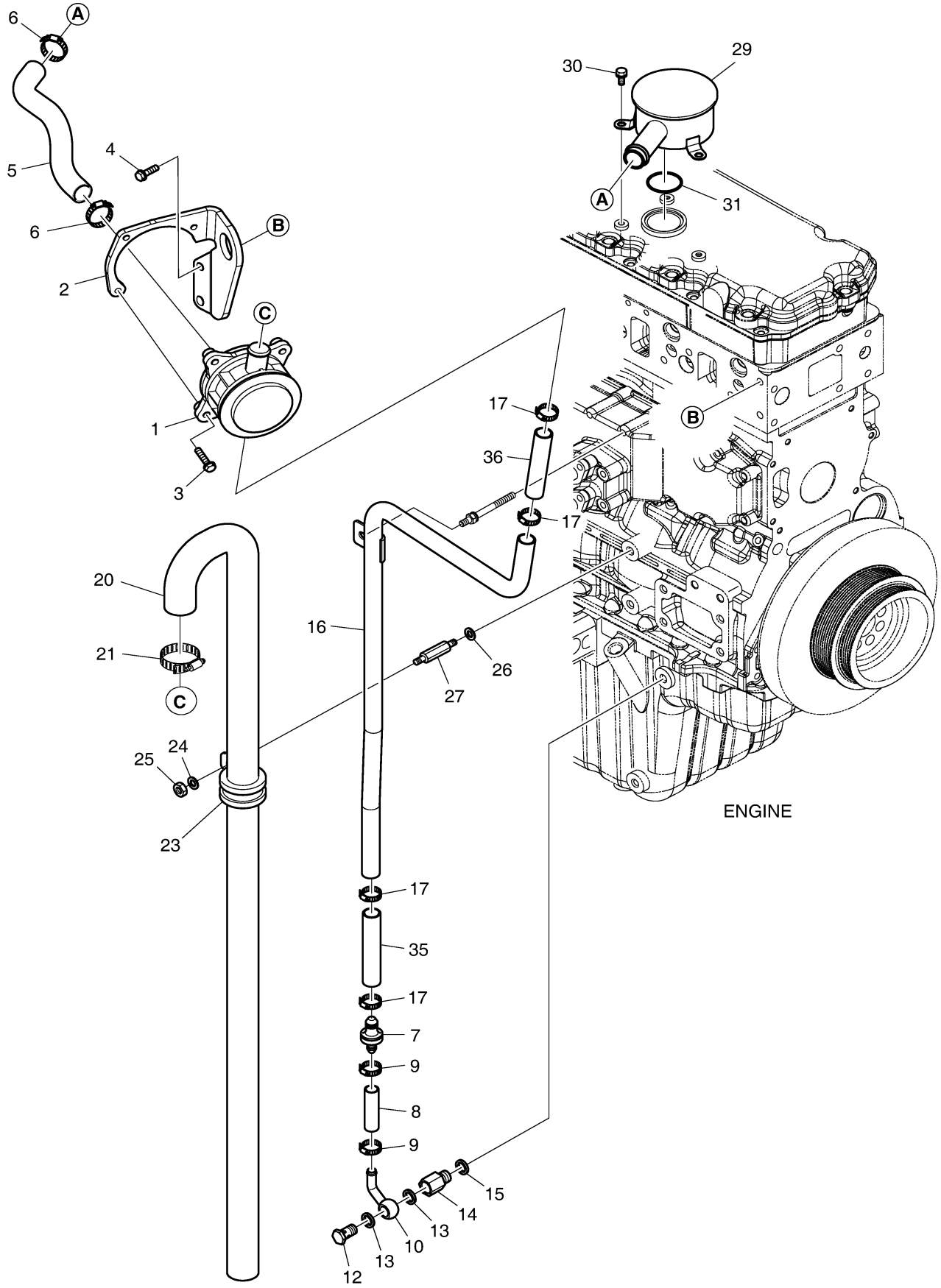

DOOSAN Doosan Infracore

Fig. 015B BREATHER [110531 ~]

Key No	Part No	Description	Qty	S.C	Serial No	ICA	Replacable	Qty
1	65.01801-5100	HOUSING;BREATHER	1					
2	65.01840-0017	BRACKET;BREATHER PIPE	1					
3	06.01923-3114	BOLT ASS'Y M8X22	3					
4	06.01924-3217	BOLT ASS'Y M10X30	2					
5	420101-00070	HOSE,AIR	1					
6	06.67020-0105	CLAMP;HOSE	2					
7	410104-00025	CHECK VALVE ASS'Y	1					
8	65.96301-0535	HOSE;RUBBER	1					
9	65.97402-0015	CLIP;HOSE	2					
10	420215-00020	PIPE,OIL DRAIN	1					
12	06.78144-8404	SCREW;HOLLOW	1					
13	06.56190-0706	SEAL RING A14X20	2					
14	65.98130-0139A	ADAPTER;INJ. PUMP OVER	1					
15	06.56190-0706	SEAL RING A14X20	1					
16	420215-00022	PIPE,OIL DRAIN	1					
17	65.97402-0025	CLAMP;HOSE	4					
20	65.96301-0464A	HOSE;RUBBER	1					
21	06.67020-0105	CLAMP;HOSE	1					
23	65.97401-5019	CLIP;PIPE	1					
24	06.16731-2107	WASHER	1					
25	06.11063-8214	NUT	1					
26	06.16731-2108	WASHER;SPRING	1					
27	65.90201-0122	BOLT;STUD	1					
29	110972-00005	HOUSING;BREATHER	1					
30	06.01923-3113	BOLT ASS'Y M8X20	3					
31	401002-00082	O-RING	1					
35	420101-00337	HOSE;AIR	1					
36	65.96301-0551	HOSE;RUBBER	1					

Fig. 016 DRIVING SYSTEM

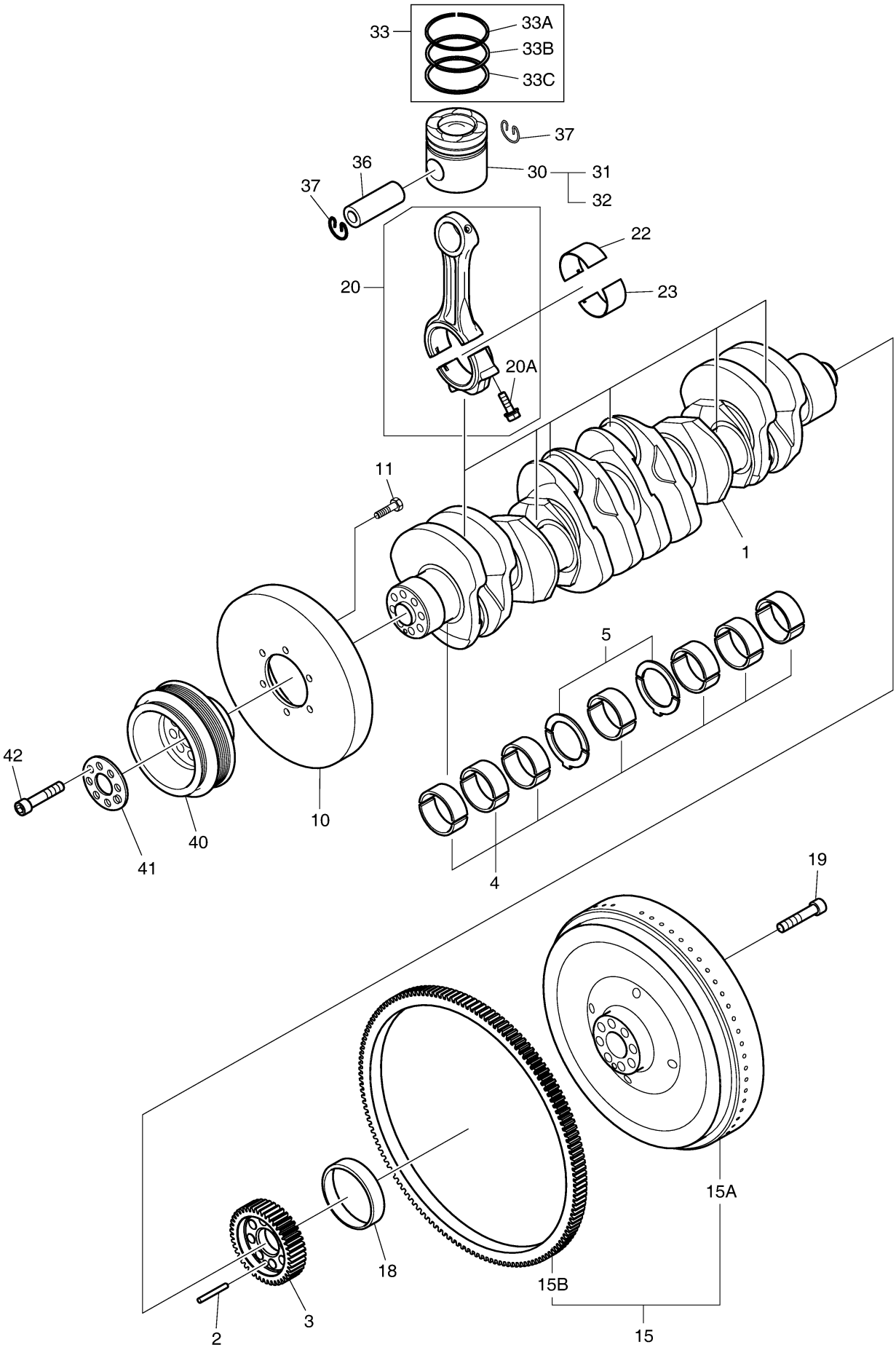

DOOSAN Doosan Infracore

Thank you so much for reading.

Please click the “Buy Now!” button below to download the complete manual.

Buy Now

After you pay.

You can download the most perfect and complete manual in the world immediately.

Our support email:

ebooklibonline@outlook.com