FORD

455
TRACTOR-LOADER-BACKHOE

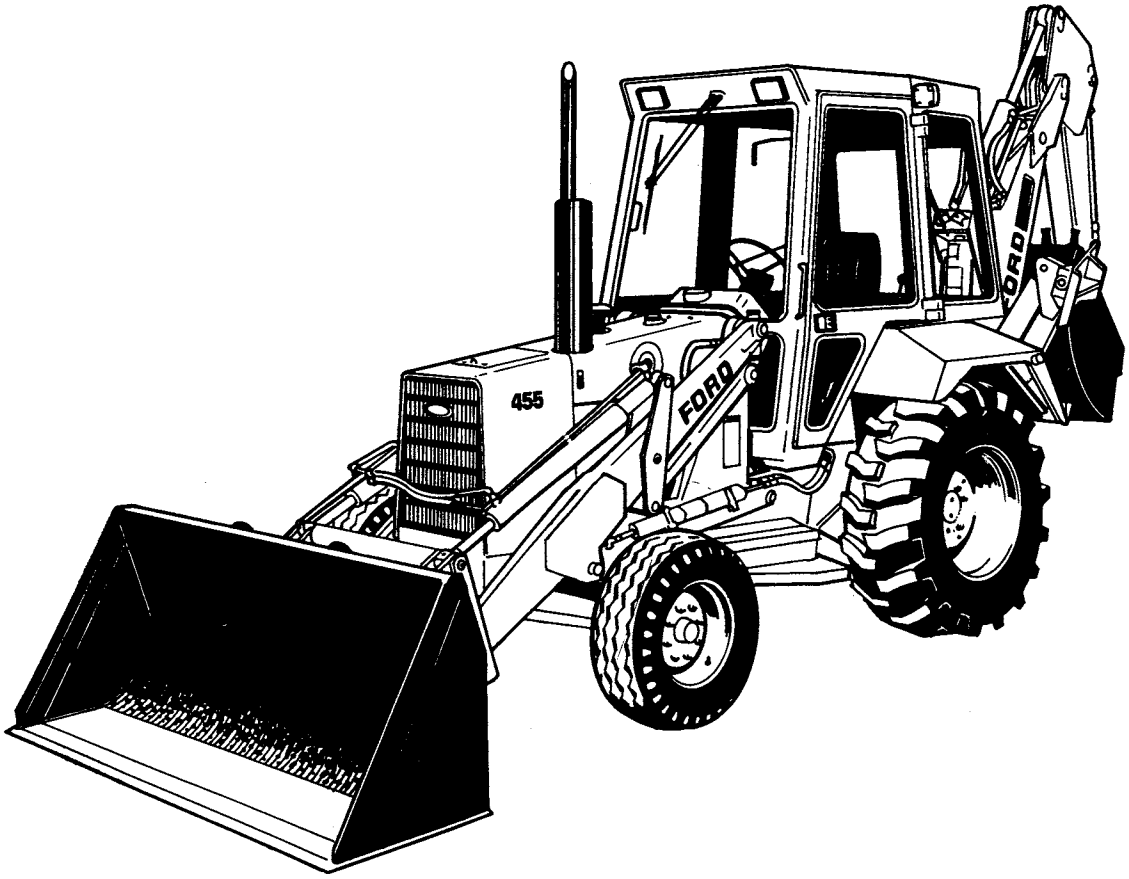

REPAIR MANUAL

Ford New Holland, Inc
New Holland, PA 17557

40045510
Reprinted

PART 1
ENGINE SYSTEMS

Chapter 1
ENGINES

A. DIESEL ENGINE — DESCRIPTION AND OPERATION

This chapter describes the overhaul and repair of the Ford 455 direct injection diesel engine.

No of Cylinder	3
Bore	4.4 in. (111.8 mm)
Stroke	4.4 in. (111.8 mm
Displacement	201 cu. in. (3294 cm^3)
Compression Ratio	16.3 to 1

The engine, Figure 1, features a cross flow cylinder head with the inlet and exhaust manifolds on opposite sides of the head.

The combustion chamber is formed in the crown of the piston which has two compression and one oil control ring all located above the piston pin.

The cylinder head assembly incorporates the valves, valve springs and spring retainers. Valve guides are an integral part of the cylinder head with replaceable valve seats pressed into the valve ports.

The crankshaft is supported in the cylinder block by four main bearings and the crankshaft end thrust bearing located on the second main bearing.

Front and rear crankshaft oil sealing is affected by one piece, single lip type seals.

The crankshaft rear main bearing carrier is sealed by an oil seal retainer, modified main bearing cap and a cork gasket which seals the face of the retainer to the block.

The piston connecting rods are "I" section and the fully floating piston pin is retained in the piston by two snap rings.

LUBRICATION SYSTEM

Lubrication of the engine is maintained by a rotor type oil pump mounted at the base of the engine block. The oil pump is driven from the camshaft and draws oil from the engine sump through a wire mesh screen.

A spring loaded relief valve in the pump body limits the pressure in the system by directing excess oil back to the intake side of the pump.

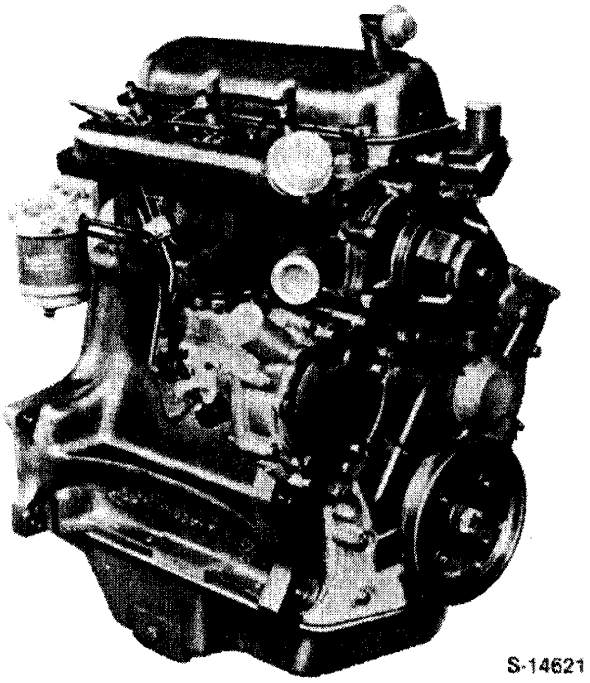

Figure 1
3-Cylinder Diesel Engine with Rotary Type Fuel Injection Pump

Oil passes from the pump to an external, throw-away, spin-on type filter incorporating a relief valve which permits oil to be bypassed if filter blockage occurs, and so assures engine lubrication at all times.

Oil flows from the filter to the main oil gallery which runs the length of the cylinder block and intersects the camshaft follower chambers.

The main gallery also supplies oil to the crankshaft main bearings and to the connecting rod journals via drillings in the crankshaft. Drilled passages from each main bearing direct oil to the camshaft bearings.

The camshaft drive gear bushing is pressure lubricated through a drilled passage from the front main bearing. The gear has small oil passages machined on both sides which allow the oil to escape.

The timing gears are lubricated by oil from the cam follower chamber and the pressure lubricated camshaft drive gear bushing.

Cylinder walls, pistons and piston pins are splash lubricated by the connecting rods and rotating crankshaft.

An intermittent flow of oil is directed to the valve rocker arm shaft assembly via a drilled passage in the cylinder block located vertically above the No. 1 camshaft bearing. This drilling aligns with a corresponding hole in the cylinder head. As the camshaft turns, holes in the camshaft and camshaft bearing align and a regulated stream of oil is directed to the cylinder head and on up the rocker arm shaft support bolt to the rocker shaft. The oil flows from the shaft through drilled holes in each rocker arm bushing to lubricate both ends of the arms. Excess oil flows down the push rods and assists in lubricating the cam followers before draining back into the sump through cored openings in the block.

B. DIESEL ENGINE — OVERHAUL

CYLINDER HEAD, VALVES AND RELATED PARTS

REMOVAL

Reference — Figure 2

NOTE: *The cylinder head can be removed with the engine installed in the tractor.*

1. Disconnect the battery.
2. Remove the vertical muffler.
3. Drain the radiator and cylinder block.
4. Shut off the heater hose taps then disconnect and plug the heater hose openings.
5. Remove the radiator top hose.
6. Shut off the main fuel tank tap.
7. Remove the hood panel assembly.
8. Disconnect the air inlet hose at the intake manifold.
9. Remove the vertical type exhaust pipe and bracket.
10. Bend the lock tabs back and remove the bolts, exhaust manifold and gasket.
11. Disconnect the cold start fuel lines at the fuel tank and thermostart unit. See Part 2, Chapter 1.
12. Remove the injection lines from the fuel injection pump and injectors. Cap the exposed openings in the pump, injectors and line ends.
13. Disconnect the fuel lines and remove the fuel filters from the inlet manifold.

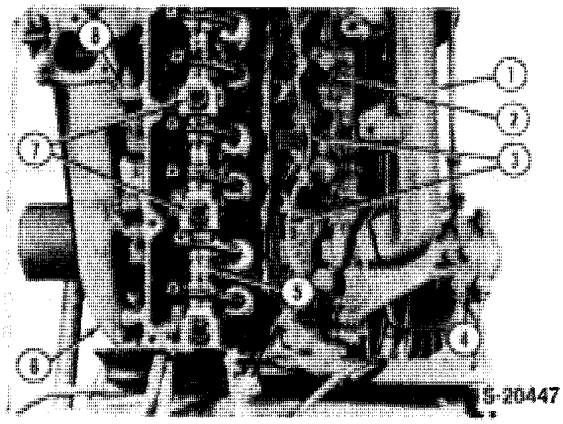

Figure 2
Engine with Rocker Arm Cover Removed

1. Intake Manifold
2. Injection Tubes
3. Leak-Off Tubes
4. Fuel Filter
5. Rocker Shaft Assembly
6. Exhaust Manifold
7. Rocker Shaft Retaining Bolts
8. Tab Washer

14. Remove the bolts and lock washers and remove the inlet manifold and gasket.

15. Remove the rocker cover bolts, rocker arm cover and gasket from the cylinder head.

16. Remove the fuel injector leak-off line. Clean the area surrounding the fuel injectors then remove the retaining nuts and carefully withdraw the fuel injectors and sealing washers from the head, Figure 3.

17. Check the push rods for straightness by rotating the rods with the valves closed and identify any bent rods.

18. Loosen the rocker shaft retaining bolts, which also serve as cylinder head bolts, evenly and alternately. Remove the rocker shaft assembly.

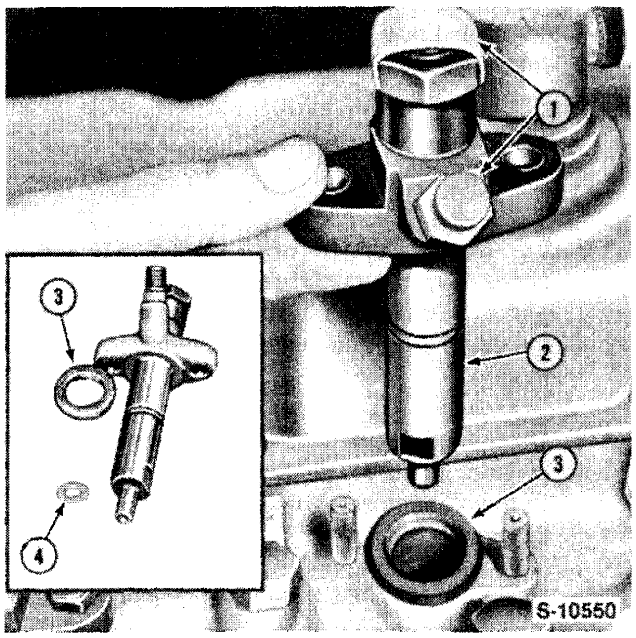

Figure 3
Fuel Injector Removed

1. Dust Caps
2. Injector
3. Dust Seal Washer
4. Injector Seal Washer

NOTE: *Leave the bolts in the rocker shaft support during removal as they retain the supports on the shaft.*

19. Remove the push rods and place in a numbered rack for ease of assembly in their original position.

20. Remove the remaining cylinder bolts and washers working inward from the ends to the center of the head.

21. Lift the cylinder head from the block. If necessary, lever the head off the block at the pads provided, taking care not to damage the cylinder head or block surfaces, Figure 4.

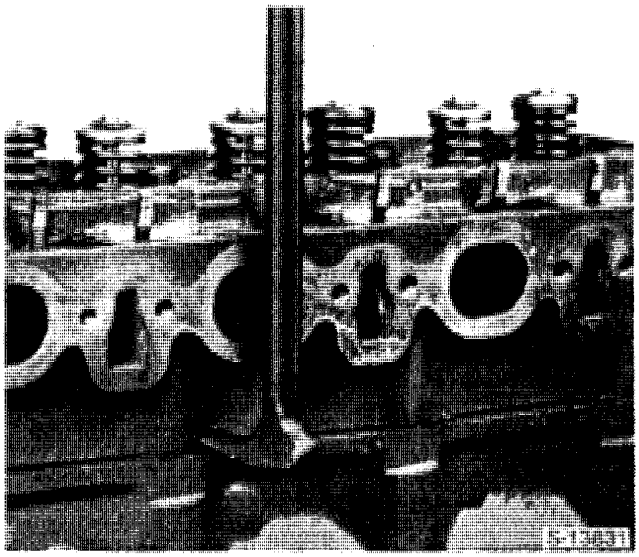

Figure 4
Cylinder Head Removal

DISASSEMBLY

THERMOSTAT:

1. Remove the coolant outlet connection and the thermostat and gasket, Figure 5.

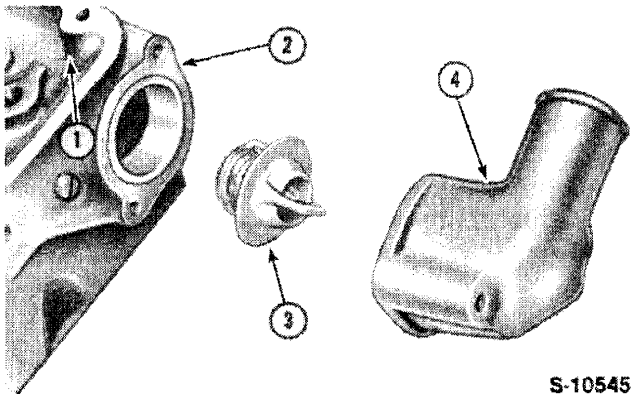

Figure 5
Coolant Outlet and Thermostat Removal

1. Cylinder Head
2. Gasket
3. Thermostat
4. Coolant Outlet Connection

CYLINDER HEAD:

2. Clean the head and remove carbon deposits from around the valve heads.

3. Using a valve spring compressor, Figure 6, remove the retainer locks, spring retainers/rotators, springs and seals from each valve, Figures 7 and 8.

4. Remove the valves and place in a numbered rack together with the valve rotators (where fitted).

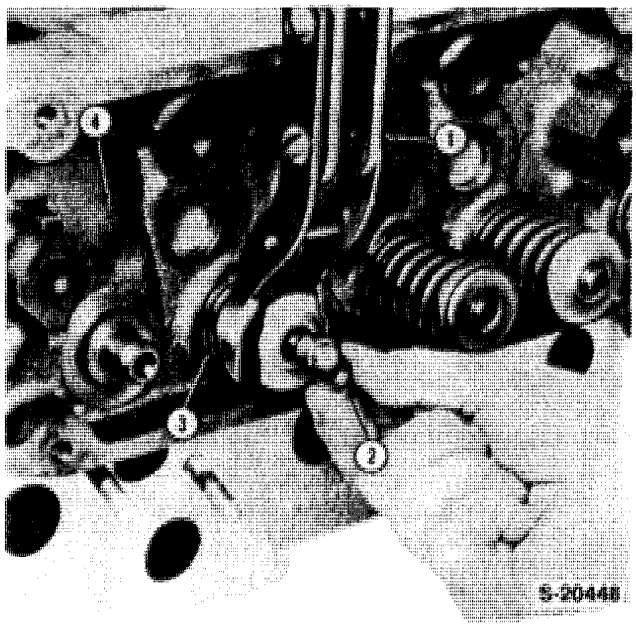

Figure 6
Valve Removal

1. Valve Spring Compressor
2. Retainer Locks
3. Valve Spring
4. Cylinder Head

ROCKER SHAFT ASSEMBLY:

5. Remove the cylinder head bolts which pass through the rocker shaft supports and slide the rocker shaft components from the shaft, Figure 9.

INSPECTION AND REPAIR

CYLINDER HEAD:

1. Scrape all gasket surfaces clean then wash the cylinder head in a suitable solvent and thoroughly dry with a lint free cloth or compressed air.

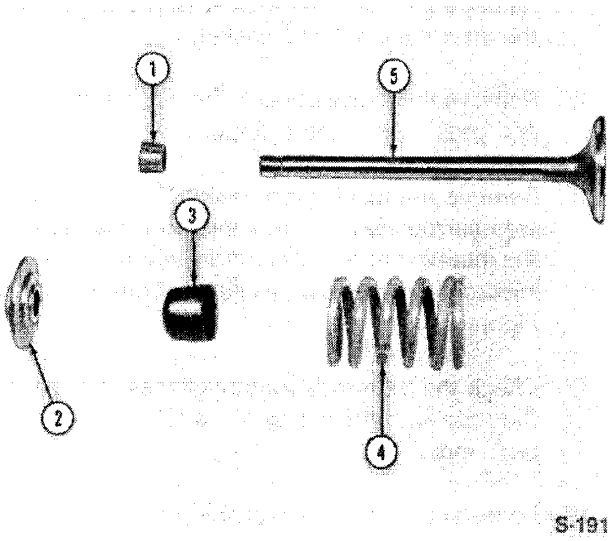

Figure 7
Intake Valve Assembly Components

1. Intake Valve Spring Retainer Lock
2. Intake Valve Spring Retainer
3. Intake Valve Seal
4. Intake Valve Spring
5. Intake Valve

2. Inspect the cylinder head for damage and, if necessary, remove nicks and burrs from the gasket faces using a suitable abrasive. Be sure all traces of abrasive material are removed after repair.

3. Use a straight edge to check the flatness of the cylinder head in all directions, Figure 10. For flatness requirement see "Specifications," Chapter 3.

   NOTE: *If the cylinder head exceeds the flatness specification it may be skimmed providing the depth from the lower face of the valve insert to the cylinder head face is not less than 0.117 in. (2.97 mm).*

4. After skimming the head, check whether any cylinder head bolts are bottoming by mounting the cylinder head on the block without a gasket and without any of the pistons at T.D.C. Install all the bolts finger tight and be sure the rocker shaft supports and flat washers are fitted with the long bolts. If a 0.010 in. (0.25 mm) feeler gauge can be inserted under the bolt head then the bolts are bottoming and the cylinder block thread must be increased in depth. Use a ½ in. x 13 UNC—2A thread tap.

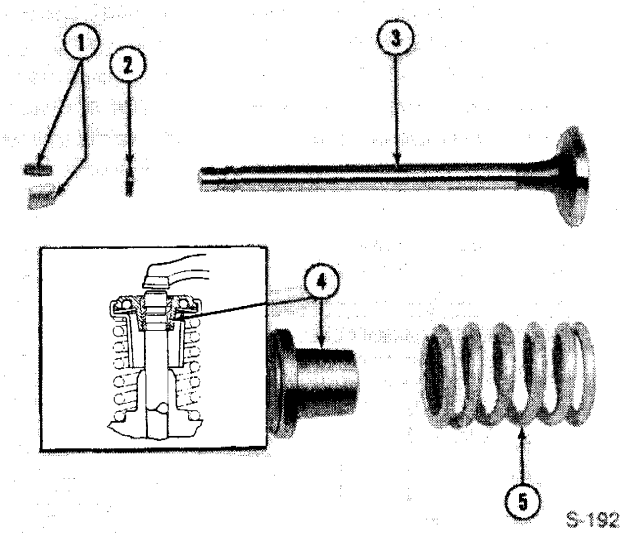

Figure 8
Exhaust Valve Assembly

1. Spring Retainer Locks
2. Seal
3. Exhaust Valve
4. Spring Retainer
5. Spring

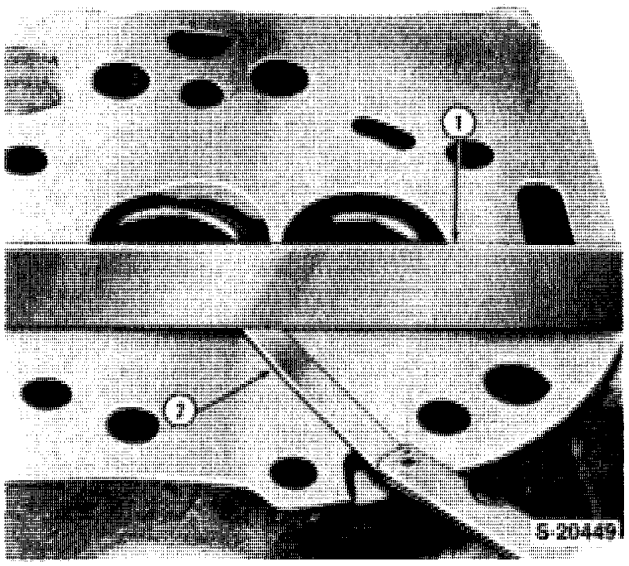

Figure 10
Measuring Cylinder Head Flatness

1. Straight Edge
2. Feeler Gauge

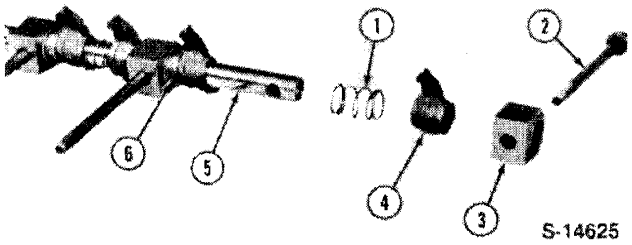

Figure 9
Rocker Shaft Disassembled

1. Spring
2. Retaining Bolt
3. Shaft Support
4. Rocker Arm
5. Shaft
6. Spacer

VALVE SEATS:

5. Examine the valve seat inserts and reface if pitted but replace if damaged. If necessary, install an oversize insert by machining the seat counterbore in the cylinder head, see "Specifications," Chapter 3. The insert must be chilled in dry-ice prior to installation.

NOTE: *Valve seat inserts of 0.010 in. (0.25 mm) and 0.020 in. (0.5 mm) oversize on diameter are sometimes installed in cylinder heads in production. Heads fitted with oversize inserts are stamped* $\frac{S010}{OS}$ *or* $\frac{S020}{OS}$ *on the exhaust manifold side in line with the valve seat concerned.*

When replacing exhaust valve seat inserts be sure the replacement inserts are of the correct type as the size and material specification varies for different engine types.

6. Check the width of the valve seat inserts and, if necessary, reface by grinding to the dimensions shown in Figure 11.

7. Grind the seat to:

Intake	0.080"-0.102" (2.032-2.590 mm).
Exhaust	0.84"-0.106" (2.133-2.692 mm).

Lower or raise the seat by removing material from the seat using the following stones.

To lower the seat use a 30 degree stone. To raise the seat use a 60 degree stone.

NOTE: *Refacing of the valve seat should always be coordinated with refacing of the valve to be sure of a compression tight fit.*