Update Date : 2017/05/12 Print Date : 2022/02/28

G26

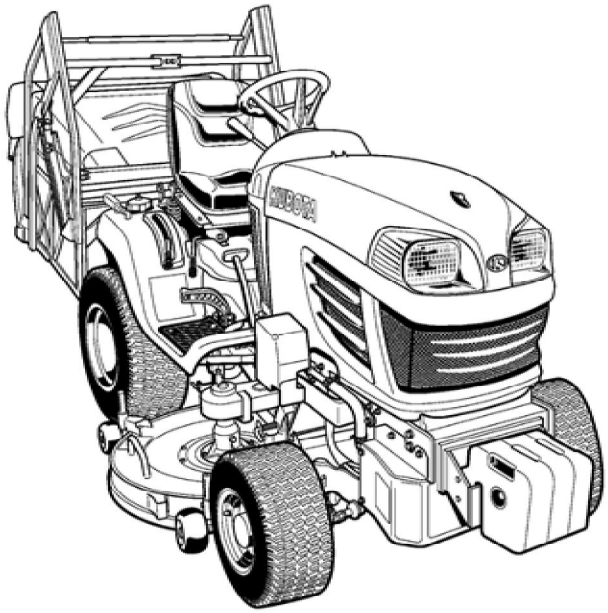

FUGG-022-13

Item	Capacity	Change Interval
Engine Oil	3.6L	after the first 50 hours of operation.Every 100 hours
Engine Oil Filter		after the first 50 hours of operation.Every 200 hours

Kubota

■ ELECTRICAL PARTS

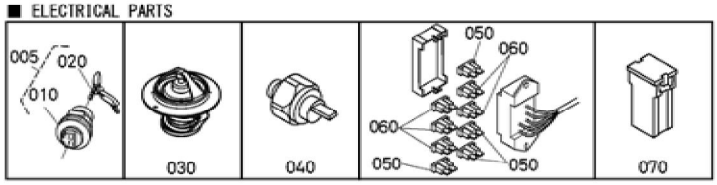

HEAD

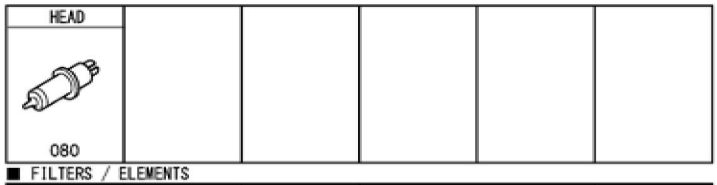

■ FILTERS / ELEMENTS

ENGINE | FUEL | CONTROL | AIR CLEANER

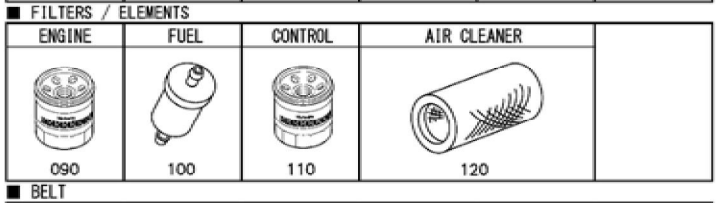

■ BELT

FAN

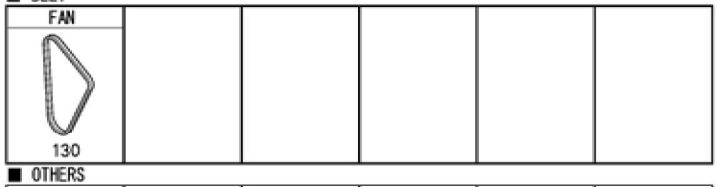

■ OTHERS

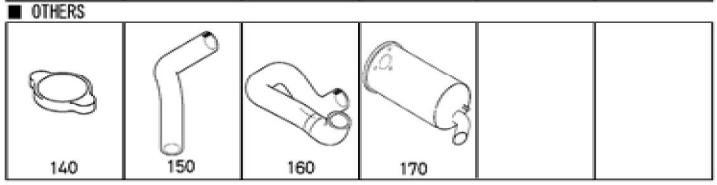

Update Date : 2017/05/12 Print Date : 2022/02/28

No.	Part Number	Part Name (POL)	Part Name (ENG)	QTY	IC	Serial No./PIN	Kg	Remarks
005	K7571-62102	ANLASSERS CHALTER,KO MP.	STARTER SWITCH,ASS Y.	1			0.090	
010	K2581-62110	ANLASSERS CHALTER	SWITCH,STA RTER	1		<=10340	0.070	
010	K7571-62112	ANLASSERS CHALTER	STARTER SWITCH	1	>>	>=10341	0.075	
020	PL501-68920	SCHLUESSEL	KEY,STARTE R	1			0.018	
030	15321-73014	GRP.THERM OSTAT	THERMOSTA T,ASSY	1		<=9W5538	0.070	
030	15321-73015	GRP.THERM OSTAT	THERMOSTA T,ASSY	1	>>	>=9Y0001	0.050	
030	15321-73016	GRP.THERM OSTAT	ASSY THERMOSTA T	1	>>	>=BU0001	0.070	
040	1A024-39010	OELDRUCKS CHALTER	SWITCH(OIL)	1			0.035	
050	T1060-30440	SICHERUNG 10A	FUSE,MINI (10A)	4			0.005	10A
060	T1060-30450	SICHERUNG 15A	FUSE,MINI (15A)	5			0.005	15A
070	K2771-63910	SICHERUNG	FUSE	1			0.000	50A
080	K2563-54340	GLUEHBIRNE	BULB	2			0.045	40/50W
090	HH150-32094	OELFILTERP ATRONE	FILTER (CARTRIDGE, OIL)	1			0.300	
100	12581-43012	GRP.KRAFTS TOFFILTER	ASSY FILTER,FUEL	2			0.034	
110	HHK70-14070	OELFILTER	FILTER(OIL)	1			0.390	
120	K1211-82320	LUFTFILTER, AUSSEN	ELEMENT (#870119N)	1			0.260	
130	16241-97010	KEILRIEMEN	FAN BELT	1		<=9Y6632	0.080	
130	16241-97012	VENTILATOR-RIEMEN	V BELT	1	>>	>=AA0001	0.080	
130	16241-97013	VENTILATOR-RIEMEN	V BELT	1	=		0.080	
140	17214-72020	KUEHLERVE RSCHLUSS	CAP,ASSY (RADIATOR)	1			0.050	
150	K2551-85160	SCHLAUCH	HOSE,WATE R UPPER	1			0.000	

Update Date : 2017/05/12 Print Date : 2022/02/28

No.	Part Number	Part Name (POL)	Part Name (ENG)	QTY	IC	Serial No./PIN	Kg	Remarks
160	K2551-85150	SCHLAUCH	HOSE,WATER LOWER	1			0.000	
170	K2551-83110	AUSPUFF KOMP.	COMP.MUFFLER	1		<=10466	0.000	
170	K2551-83112	AUSPUFF KOMP.	MUFFLER,COMP	1	>>	>=10467	2.150	

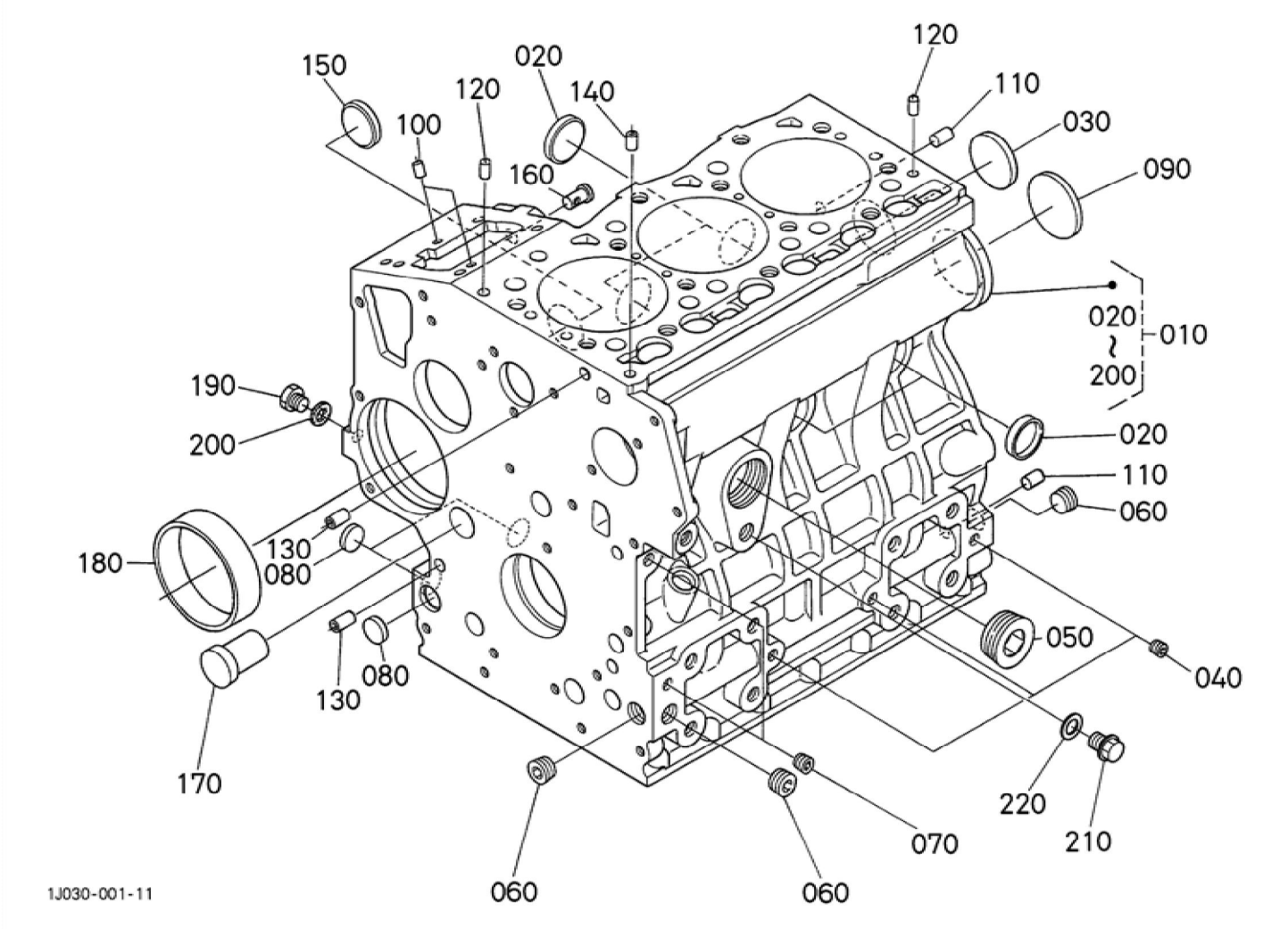
150
020
120
140
120
110
100
030
160
090
020
~
200
010
190
200
020
110
060
180
130
080
050
040
130
080
170
220
210
070
060
060
1J030-001-11

BKIDK0660 >> G26-HD >> MOTOR / ENGINE >> 200100 KURBELGHAEUSE / CRANKCASE

Update Date : 2017/05/12 Print Date : 2022/02/28

No.	Part Number	Part Name (POL)	Part Name (ENG)	QTY	IC	Serial No./PIN	Kg	Remarks
010	1G692-01013	KOMP.KURBELGEHAEUSE	COMP.CRANKCASE	1			30.000	
010	1G036-01010	KOMP.KURBELGEHAEUSE	COMP.CRANKCASE	1	>>	<=9TZ999	0.000	
010	1G036-01040	KOMP.KURBELGEHAEUSE	COMP.CRANKCASE	1	>>	>=9U0001	31.000	
020	15451-96270	KAPPE	CAP,SEALING	4			0.010	
030	15221-03490	STOPFEN	CAP,SEALING	1			0.020	
040	15261-96010	STOPFEN	PLUG	3			0.002	
050	16683-96020	STOPFEN	PLUG	1			0.088	
060	16241-96010	STOPFEN	PLUG	3			0.007	
070	15521-96020	STOPFEN	PLUG	2			0.003	
080	17391-96160	STOPFEN	PLUG,EXPANSION	3			0.003	
090	16271-96160	STOPFEN	PLUG,EXPANSION	1			0.025	
100	05012-00508	ZYLINDERSTIFT	PIN,STRAIGHT	2			0.001	
110	05012-00814	ZYLINDERSTIFT	PIN,STRAIGHT	2			0.006	
120	05012-00610	ZYLINDERSTIFT	PIN,STRAIGHT	2			0.003	
130	15231-33960	ROHRSTIFT	PIN,PIPE	2		<=6CPZ999	0.001	
130	17331-59190	ROHRSTIFT	PIN,PIPE	2	>>	>=6CQ0001	0.002	
140	16241-33650	ROHRSTIFT	PIN,PIPE	1			0.002	
150	16241-96262	STOPFEN	PLUG,FUEL CAMSHAFT	1			0.007	
160	16261-56280	STARTFEDERSTIFT	PIN(START SPRING)	1			0.004	
170	16282-96010	STOPFEN	PLUG	1			0.090	
180	16271-55350	BUCHSE	BUSHING (GEAR,GOBERNOR)	1			0.060	
190	15221-33610	STOPFEN	PLUG	1		<=9U5241	0.009	
190	1G896-33610	BOLZEN	PLUG	1	NI	>=9W0001	0.008	
200	15021-33660	DICHTUNGSPLATTE	PACKING	1			0.001	
210	06311-55020	STOPFEN	PLUG	1			0.031	

BKIDK0660 >> G26-HD >> MOTOR / ENGINE >> 200100 KURBELGHAEUSE / CRANKCASE

Update Date : 2017/05/12 Print Date : 2022/02/28

No.	Part Number	Part Name (POL)	Part Name (ENG)	QTY	IC	Serial No./PIN	Kg	Remarks
220	04724-00130	DICHTUNGSPLATTE	GASKET	1			0.003	

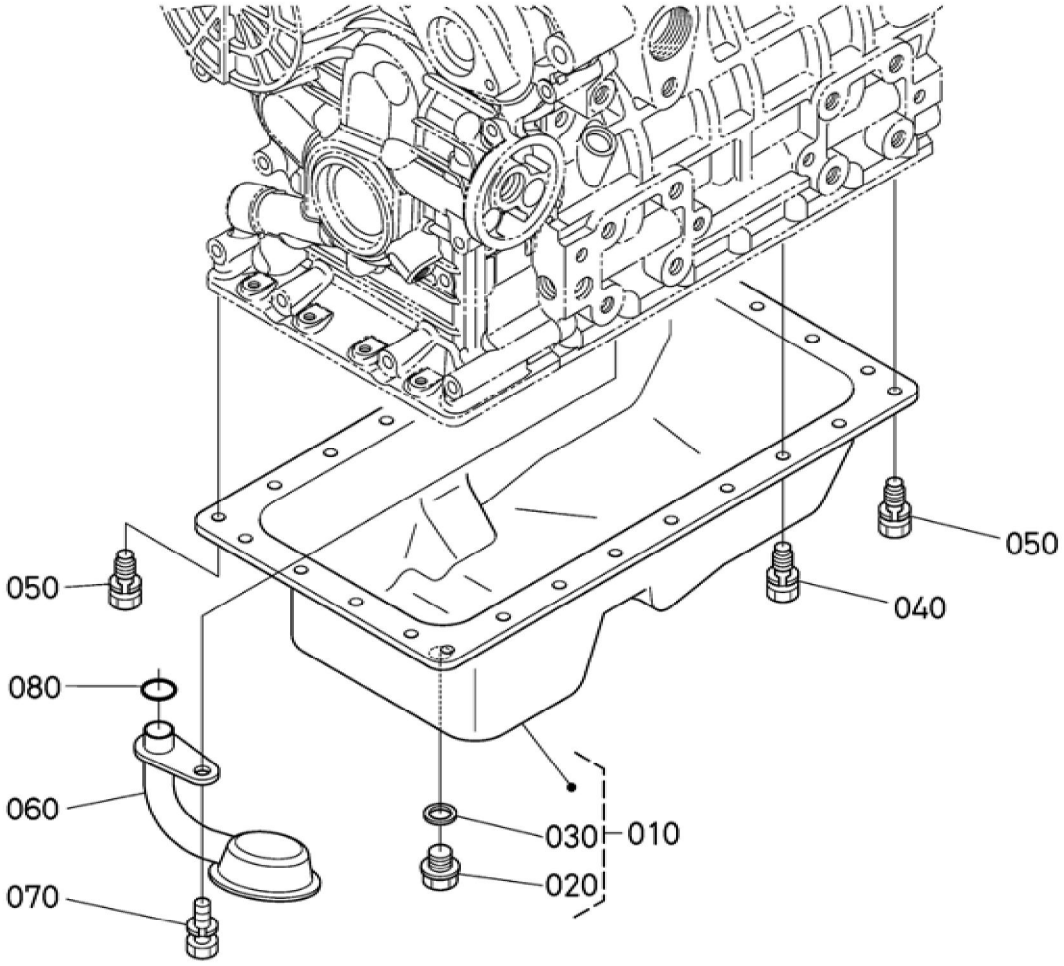

1J030-002-11

BKIDK0660 >> G26-HD >> MOTOR / ENGINE >> 200200 OL-FANGER / OIL PAN

Update Date : 2017/05/12 Print Date : 2022/02/28

No.	Part Number	Part Name (POL)	Part Name (ENG)	QTY	IC	Serial No./PIN	Kg	Remarks
010	1J030-01600	GRP.OELWANNE	KIT OIL PAN	1			1.557	
020	13901-33750	ENTLEERUNGSSTOPFEN	PLUG,DRAIN	1			0.025	
030	15862-96670	DICHTUNGSPLATTE	GASKET	1			0.001	
040	01023-50614	BOLZEN	BOLT,SEMS	24			0.005	
050	01023-50614	BOLZEN	BOLT,SEMS	2			0.005	
060	1J030-32110	OELFILTER	FILTER,OIL	1			0.100	
070	01123-50816	SCHRAUBE	BOLT,SEMS	1			0.011	
080	04814-00160	O RING	O RING	1			0.001	

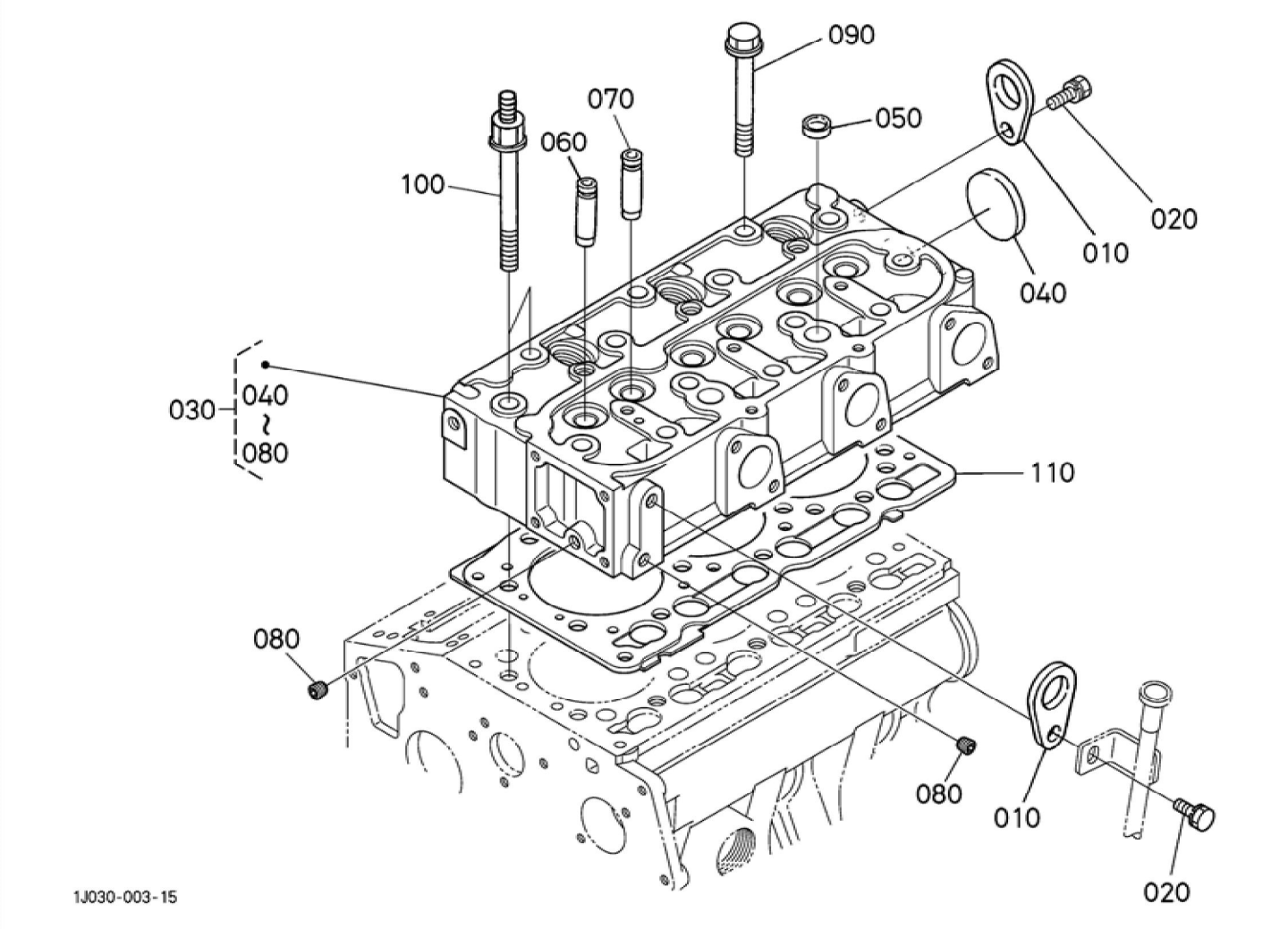
090
070
050
060
100
020
010
040
030
040
~
080
110
080
080
010
020
1J030-003-15

BKIDK0660 >> G26-HD >> MOTOR / ENGINE >> 200300 ZYLINDERKOPF / CYLINDER HEAD

Update Date : 2017/05/12 Print Date : 2022/02/28

No.	Part Number	Part Name (POL)	Part Name (ENG)	QTY	IC	Serial No./PIN	Kg	Remarks
010	15221-01750	MOTORHAKEN	HOOK,ENGINE	2			0.040	
020	01123-50814	BOLZEN	BOLT,SEMS	2			0.010	
030	1G042-03043	KOMP.ZYLINDERKOPF	COMP.CYLINDER HEAD	1			9.000	
040	15321-96260	KAPPE	CAP,SEALING	1			0.014	
050	15261-03370	STOEPSEL,ABDICHTUNG	CAP,SEALING	2			0.005	
060	16261-13540	EINLASSVENTILFUEHRUNG	GUIDE,INLET VALVE	3			0.020	
070	16261-13560	AUSLASSVENTILFUEHRUNG	GUIDE,EXHAUST VALVE	3			0.019	
080	15261-96010	STOPFEN	PLUG	2			0.002	
090	16241-03450	ZYLINDERKOPFSCHRAUBE	BOLT,HEAD (CYLINDER)	12			0.050	
100	16216-03450	ZYLINDERKOPFSCHRAUBE	BOLT,CYLINDER HEAD	2			0.070	
110	1G040-03310	ZYLINDERKOPFDICHTUNG	GASKET,CYLINDER HEAD	1			0.150	

BKIDK0660 >> G26-HD >> MOTOR / ENGINE >> 200400 GETRIEBE GEHAEUSE / GEAR CASE

Update Date : 2017/05/12 Print Date : 2022/02/28

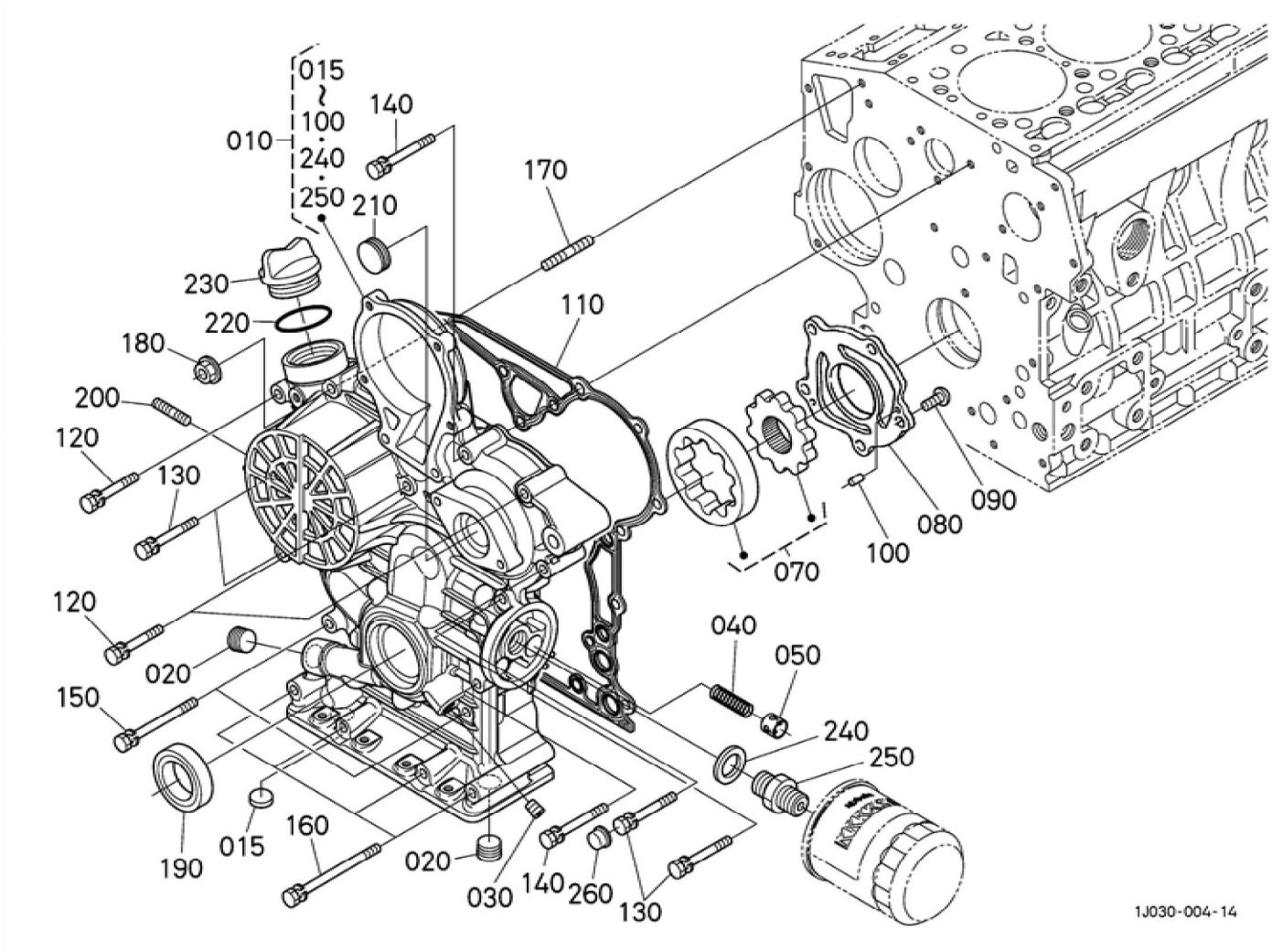

Thank you so much for reading.

Please click the “Buy Now!” button below to download the complete manual.

Buy Now

After you pay.

You can download the most perfect and complete manual in the world immediately.

Our support email:

ebooklibonline@outlook.com