BKIDA0097 >> KX71(H)[S.No.;>=55001] >> MOTOR / BASIC ENGINE >> S00100 KURBELWELLENGEHAEUSE / CRANKCASE

Update Date : 2017/05/11 Print Date : 2022/02/19

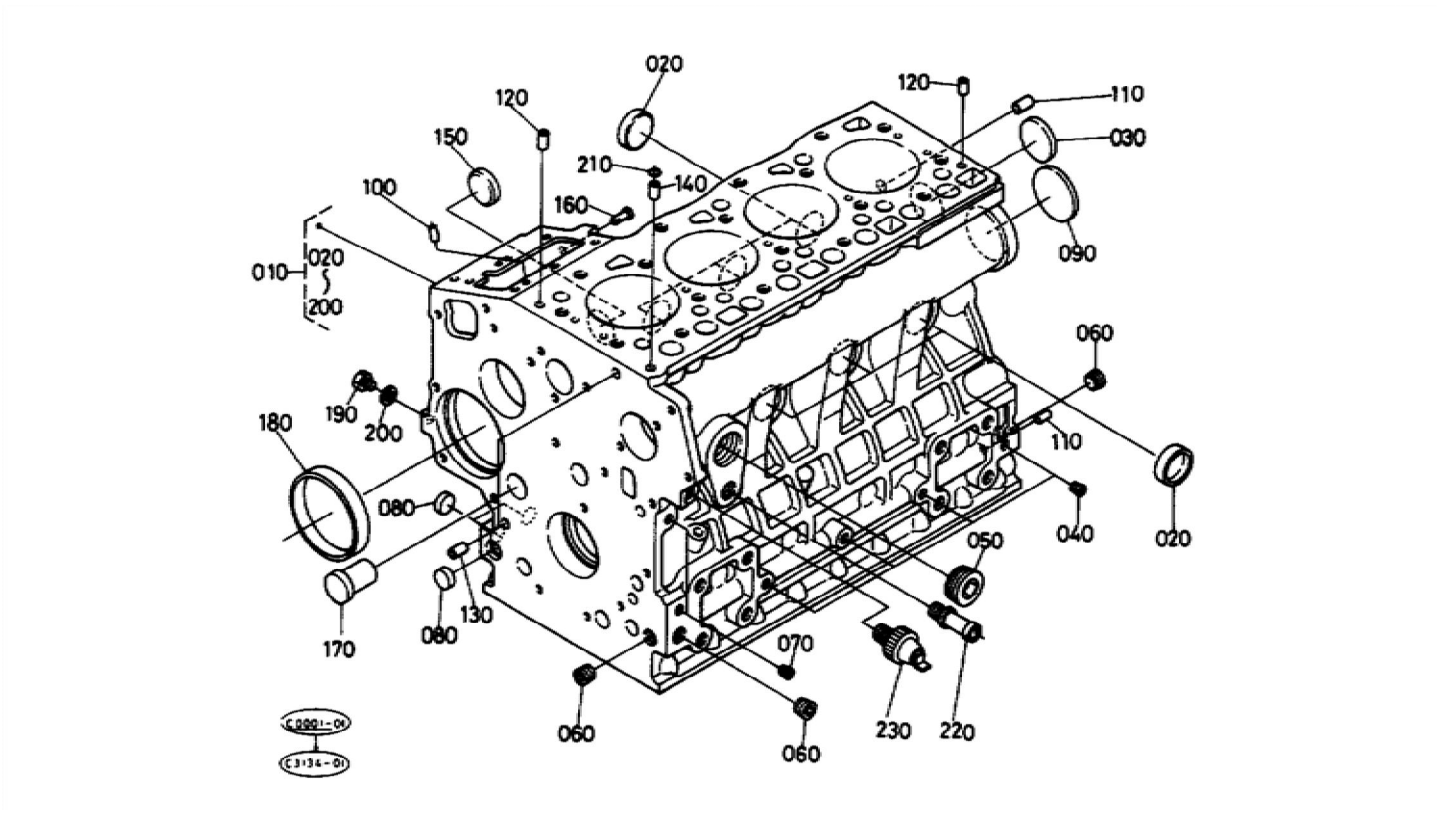

BKIDA0097 >> KX71(H)[S.No.;>=55001] >> MOTOR / BASIC ENGINE >> S00100 KURBELWELLENGEHAEUSE / CRANKCASE

Update Date : 2017/05/11 Print Date : 2022/02/19

No.	Part Number	Part Name (POL)	Part Name (ENG)	QTY	IC	Serial No./PIN	Kg	Remarks
010	16282-01012	KOMP.KURBELGEHAEUSE	COMP.CRANKCASE	1		<=425160	0.000	
010	16282-01015	KOMP.KURBELGEHAEUSE	COMP.CRANKCASE	1	NI	=>425161	34.000	
020	15451-96270	KAPPE	CAP SEALING	6			0.010	
030	15221-03490	STOPFEN	CAP SEALING	1			0.020	
040	15261-96010	STOPFEN	PLUG	4			0.002	
050	16271-96020	STOPFEN	PLUG	1			0.000	
060	16241-96010	STOPFEN	PLUG	3			0.007	
070	15521-96020	STOPFEN	PLUG	2			0.003	
080	06311-75018	STOPFEN	PLUG	3		<=308554	0.004	
080	17391-96160	STOPFEN	PLUG	3	>>	=>308555	0.003	
090	16271-96160	STOPFEN	PLUG	1			0.025	
100	05012-00508	ZYLINDERSTIFT	PIN STRAIGHT	2			0.001	
110	05012-00814	ZYLINDERSTIFT	PIN STRAIGHT	2			0.006	
120	05012-00610	ZYLINDERSTIFT	PIN STRAIGHT	2			0.003	
130	15231-33960	ROHRSTIFT	PIN PIPE	2			0.001	
140	16241-33650	ROHRSTIFT	PIN PIPE	1			0.002	
150	16241-96260	STOPFEN	PLUG	1			0.006	
160	15221-56280	STARTFEDERSTIFT	PIN START SPRING	1			0.006	
170	16282-96010	STOPFEN	PLUG	1			0.090	
180	16271-55350	BUCHSE	BUSH GOVERNOR GEAR	1			0.060	
190	15221-33610	STOPFEN	PLUG	1			0.009	
200	15021-33660	DICHTUNGSPLATTE	GASKET	1			0.001	
210	15221-33700	O RING	O RING	1			0.001	
220	15321-73340	WASSERROHR	PIPE WATER RETURN	1			0.016	
230	15531-39010	OELDRUCKSCHALTER	SWITCH OIL	1			0.032	

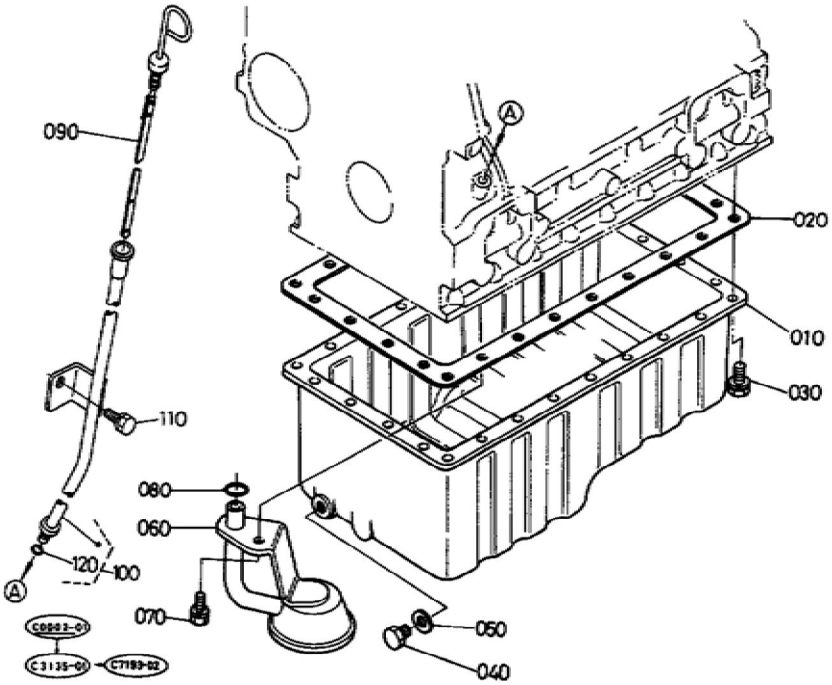
090
A
020
010
030
110
080
060
120
100
A
070
050
040
C0503-01
C3135-01
C7193-02

BKIDA0097 >> KX71(H)[S.No.;>=55001] >> MOTOR / BASIC ENGINE >> S00200 OELWANNE / OIL PAN

Update Date : 2017/05/11 Print Date : 2022/02/19

No.	Part Number	Part Name (POL)	Part Name (ENG)	QTY	IC	Serial No./PIN	Kg	Remarks
010	16282-01500	KOMP.OELWANNE	COMP.OIL PAN	1			1.200	
020	16299-01620	DICHTUNG	GASKET OIL PAN NA	1			0.003	
030	01023-50612	BOLZEN	BOLT	26			0.005	
040	15221-33750	STOPFEN	PLUG	1			0.032	
050	15109-33660	DICHTUNGSPLATTE	GASKET	1			0.001	
060	16241-32110	OELFILTER	FILTER OIL	1			0.000	
070	01123-50816	BOLZEN	BOLT	1			0.011	
080	04814-00160	O RING	O RING	1			0.001	
090	16282-36410	OELMESSSTAB	GAUGE OIL	1			0.000	
100	16282-36420	FUEHRUNG, OELMESSSTAB	GUIDE OIL GAUGE	1		<=425160	0.110	
100	16282-36500	GRP.FUEHRUNG	ASSY GUIDE OIL GAUGE	1	NI	=>425161	0.110	
110	01123-50814	BOLZEN	BOLT	1			0.010	
120	04814-00090	O RING	O RING	1		=>425161	0.001	

Update Date : 2017/05/11 Print Date : 2022/02/19

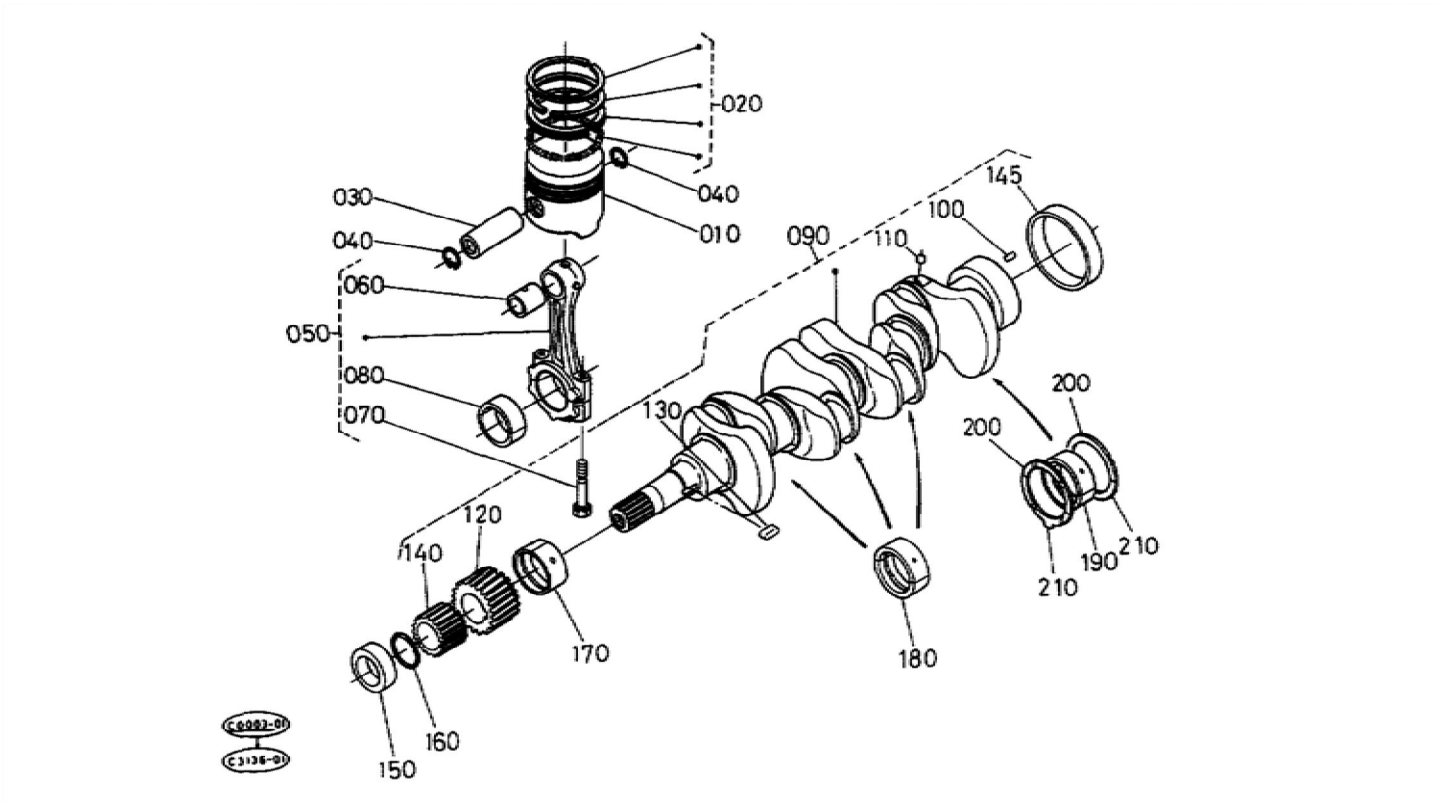

BKIDA0097 >> KX71(H)[S.No.;>=55001] >> MOTOR / BASIC ENGINE >> S00300 KOLBEN KURBELWELLE / PISTON CRANKSHAFT

Update Date : 2017/05/11 Print Date : 2022/02/19

No.	Part Number	Part Name (POL)	Part Name (ENG)	QTY	IC	Serial No./PIN	Kg	Remarks
010	16281-21110	KOLBEN	PISTON	4			0.000	STD
010	16281-21910	KOLBEN	PISTON	4			0.000	+0.5MM
020	16261-21050	GRP.KOLBEN RING	ASSY PISTON RING	4			0.042	STD
020	16261-21090	GRP.KOLBEN RING	ASSY PISTON RING	4			0.050	+0.5MM
030	16241-21310	KOLBENBOLZEN	PIN PISTON	4			0.135	
040	16241-21330	SEEGERING	CIR CLIP PISTON PIN	8			0.002	
050	16241-22012	PLEUELSTANGE KOMP.	ASSY CONNECTING ROD	4			0.545	
060	16241-21980	BUCHSE,KOLBENSTIFT	BUSH PISTON PIN	1			0.003	
070	16241-22140	BOLZEN	BOLT CONNECTING ROD	8			0.024	
080	16241-22310	LAGERSCHALE	METAL CRANKPIN	4			0.038	SET STD
080	16241-22970	LAGERSCHALE	METAL CRANKPIN	4			0.080	SET -0.2MM
080	16241-22980	LAGERSCHALE	METAL CRANKPIN	4			0.100	SET -0.4MM
090	16282-23010	KOMP.KURBELWELLE	COMP.CRANKSHAFT	1			0.000	
100	05012-00508	ZYLINDERSTIFT	PIN STRAIGHT	1			0.001	
110	07715-00401	KUGEL	BALL	4			0.001	
120	16241-24110	ZAHNRAD	GEAR CRANKSHAFT	1			0.150	
130	16271-95230	KEIL	KEY	1			0.005	
140	16241-35630	ZAHNRAD	GEAR OIL PUMP DRIVE	1			0.102	
145	16241-23280	MUFFE	SLEEVE CRANKSHAFT	1			0.060	
150	16241-23250	HALSRING	COLLAR CRANKSHAFT	1			0.050	
160	15667-96750	O RING	O RING	1			0.020	

Update Date : 2017/05/11 Print Date : 2022/02/19

No.	Part Number	Part Name (POL)	Part Name (ENG)	QTY	IC	Serial No./PIN	Kg	Remarks
170	16241-23470	LAGERSCHALE	METAL CRANKSHAFT	1			0.060	STD
170	16241-23910	LAGERSCHALE	METAL CRANKSHAFT	1			0.030	-0.2MM
170	16241-23920	LAGERSCHALE	METAL CRANKSHAFT	1			0.068	-0.4MM
180	16241-23480	LAGERSCHALE	METAL CRANKSHAFT	3			0.050	SET STD
180	16241-23930	LAGERSCHALE	METAL CRANKSHAFT	3			0.100	SET -0.2MM
180	16241-23940	LAGERSCHALE	METAL CRANKSHAFT	3			0.050	SET -0.4MM
190	16241-23490	LAGERSCHALE	METAL CRANKSHAFT	1			0.000	SET STD
190	16241-23860	LAGERSCHALE	METAL CRANKSHAFT	1			0.100	SET -0.2MM
190	16241-23870	LAGERSCHALE	METAL CRANKSHAFT	1			0.068	SET -0.4MM
200	15521-23530	LAGERSCHALE	METAL SIDE	2			0.010	STD
200	15521-23950	LAGERSCHALE	METAL SIDE	2			0.010	+0.2MM
200	15521-23960	LAGERSCHALE	METAL SIDE	2			0.010	+0.4MM
210	19202-23540	LAGERSCHALE	METAL SIDE	2			0.010	STD
210	19202-23970	LAGERSCHALE	METAL SIDE	2			0.010	+0.2MM
210	19202-23980	LAGERSCHALE	METAL SIDE	2			0.010	+0.4MM

Update Date : 2017/05/11 Print Date : 2022/02/19

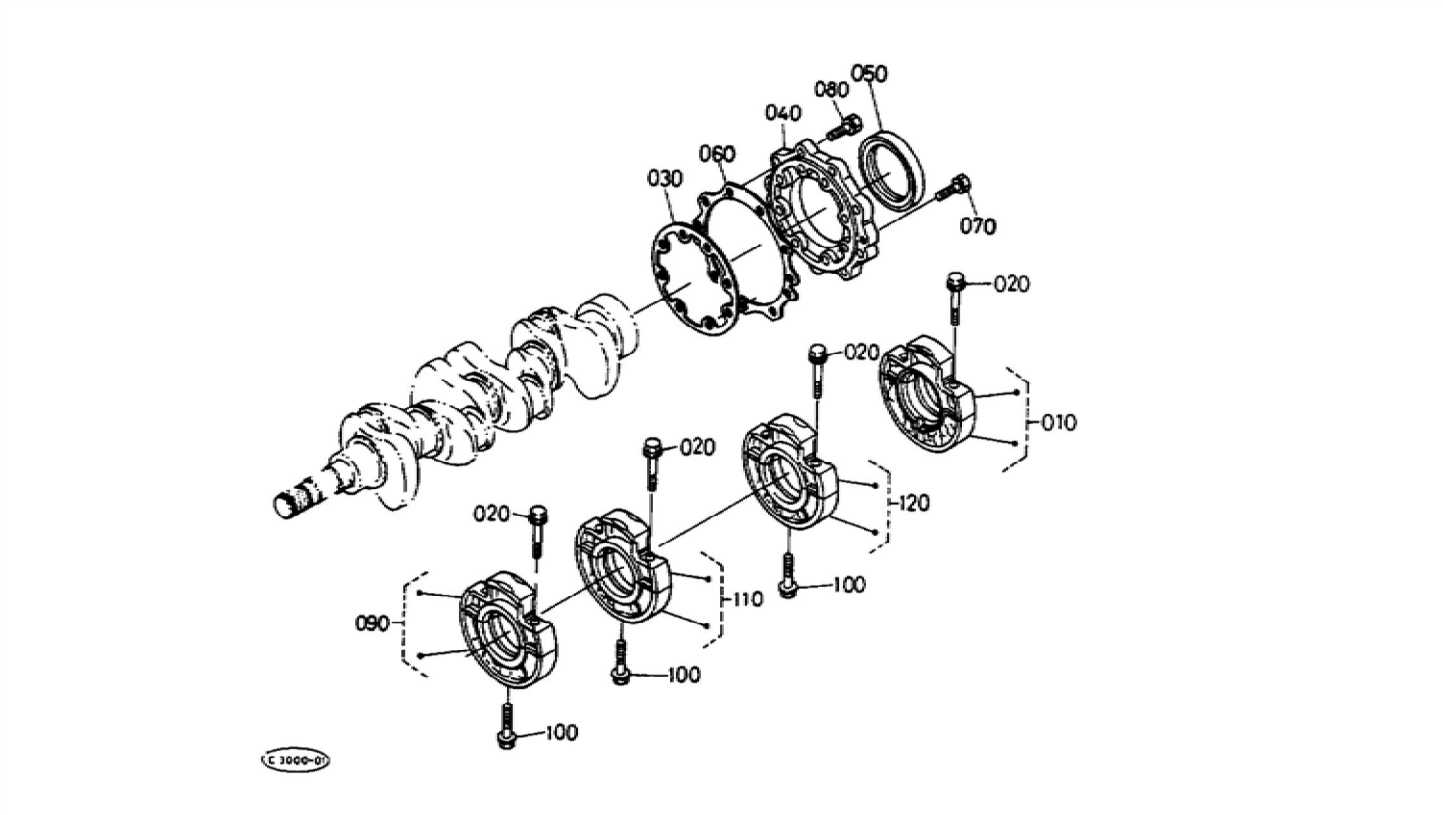

BKIDA0097 >> KX71(H)[S.No.;>=55001] >> MOTOR / BASIC ENGINE >> S00400 LAGERGEHAEUSE / MAIN BEARING CASE

Update Date : 2017/05/11 Print Date : 2022/02/19

No.	Part Number	Part Name (POL)	Part Name (ENG)	QTY	IC	Serial No./PIN	Kg	Remarks
010	16261-04090	GRP.LAGERGEHAEUSE	ASSY CASE MAIN BRG.	1			0.000	
020	16241-04540	BOLZEN,LAGERKASTEN	BOLT BEARING CASE	8			0.020	
030	16299-04360	DICHTUNG,LAGER	GASKET BRG.CASE NA	1			0.000	
040	16241-04810	DECKEL,LAGERKASTEN	COVER BEARING CASE	1			0.000	
050	16241-04460	OELDICHTUNGSRING	SEAL OIL	1			0.020	
060	16299-04820	DICHTUNGSPLATTE	GASKET BRG.CASE COV.	1			0.000	
070	01023-50625	BOLZEN	BOLT	8			0.007	
080	01023-50620	BOLZEN	BOLT	9			0.006	
090	16261-04040	GRP.LAGERGEHAEUSE	ASSY CASE MAIN BRG.	1			0.900	
100	16241-04560	BOLZEN,LAGERKASTEN	BOLT BEARING CASE	3			0.030	
110	16261-04050	GRP.LAGERGEHAEUSE	ASSY CASE MAIN BRG.	1			1.110	
120	16282-04060	GRP.LAGERGEHAEUSE	ASSY CASE MAIN BRG.	1			1.000	

Update Date : 2017/05/11 Print Date : 2022/02/19

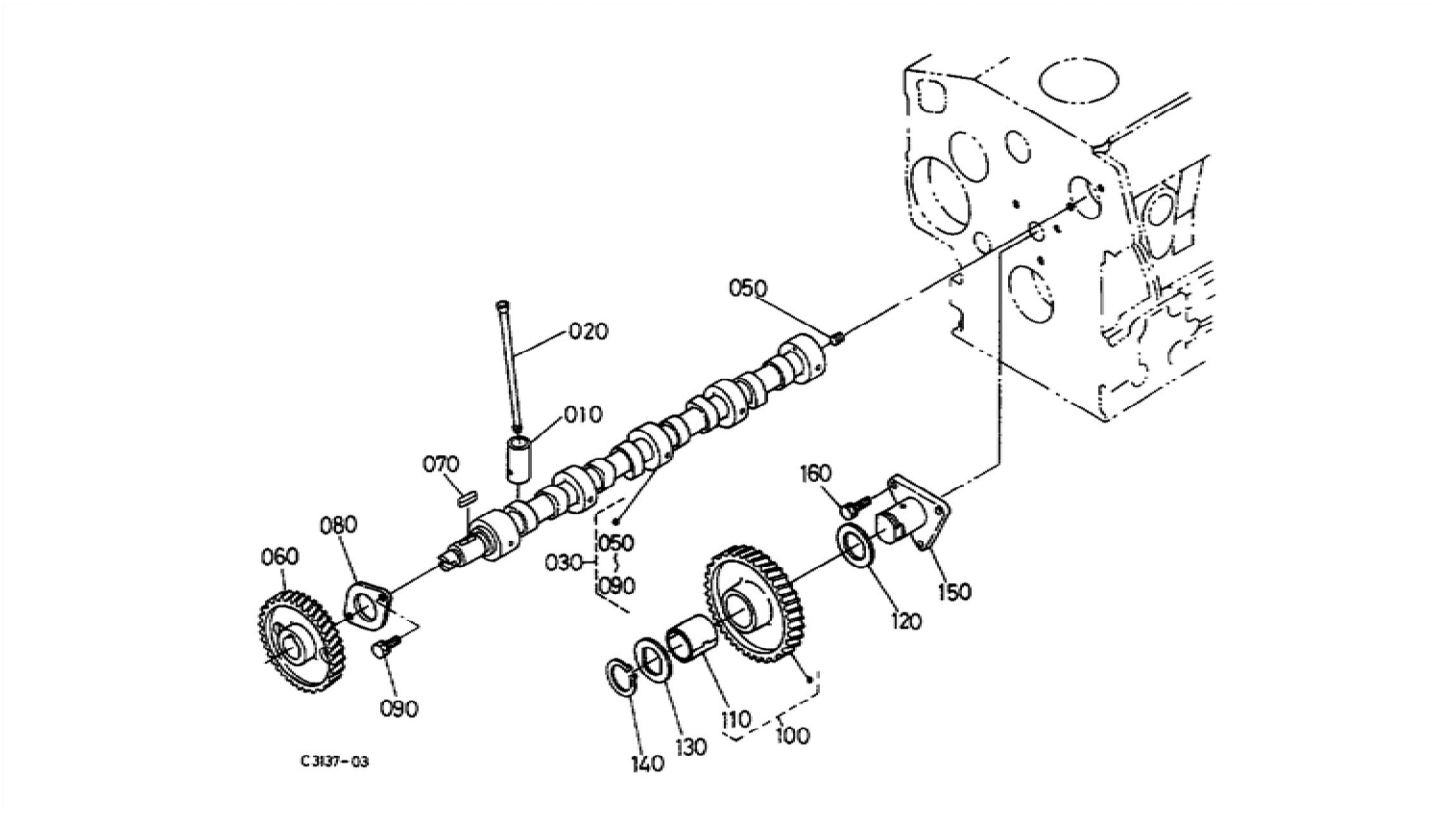

BKIDA0097 >> KX71(H)[S.No.;>=55001] >> MOTOR / BASIC ENGINE >> S00500 NOCKENWELLE / CAMSHAFT

Update Date : 2017/05/11 Print Date : 2022/02/19

No.	Part Number	Part Name (POL)	Part Name (ENG)	QTY	IC	Serial No./PIN	Kg	Remarks
010	16261-15550	STOESSEL	TAPPET	8			0.035	
020	16241-15110	STOESSELSTANGE	PUSH ROD	8			0.030	
030	16271-16010	GRP.NOCKENWELLE	ASSY CAMSHAFT	1			1.800	
050	15521-93610	ANSCHLAGSCHRAUBE	SCREW SET	1			0.002	
060	16241-16510	ZAHNRAD	GEAR CAMSHAFT	1			0.450	
070	05712-00518	KEIL	KEY FEATHER	1			0.003	
080	16241-16270	NOCKENWELLENSPERRPLATTE	STOPPER CAMSHAFT	1			0.040	
090	01023-50614	BOLZEN	BOLT	2			0.005	
100	16271-24010	ZAHNRAD	COMP GEAR IDLE	1			0.600	
110	16271-24980	BUCHSE	BUSH IDLE GEAR	1			0.020	
120	16241-24360	HUELSE	COLLAR IDLE GEAR	1			0.010	
130	16241-24370	HUELSE	COLLAR IDLE GEAR	1			0.012	
140	16241-24320	SEEGERING	CIR CLIP IDLE GEAR	1			0.003	
150	16241-24250	WELLE	SHAFT IDLE GEAR	1			0.255	
160	01023-50616	BOLZEN	BOLT	3			0.006	

Update Date : 2017/05/11 Print Date : 2022/02/19

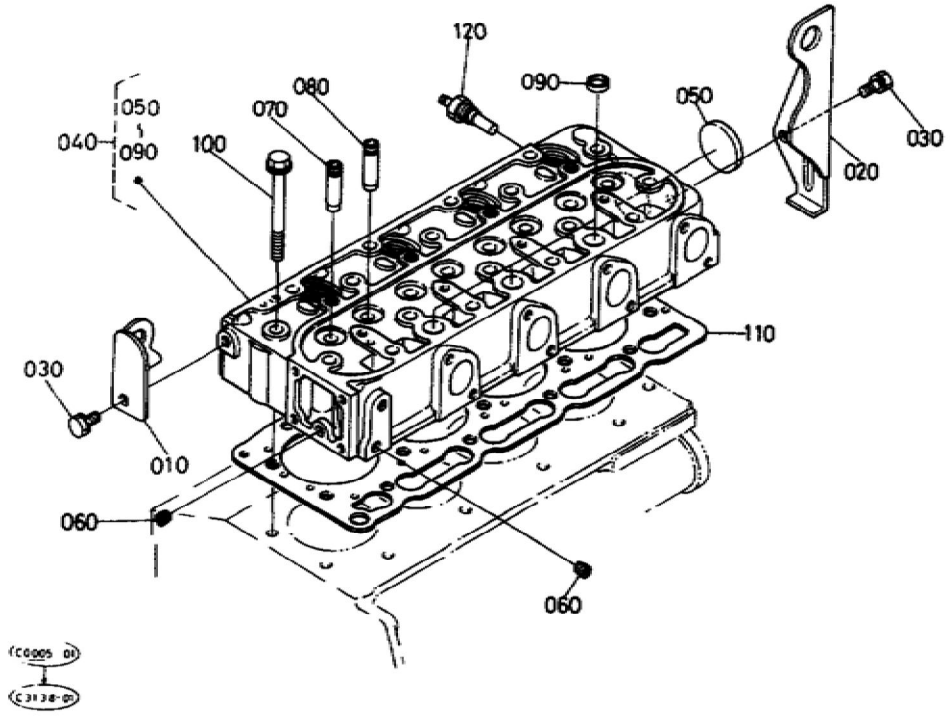

BKIDA0097 >> KX71(H)[S.No.;>=55001] >> MOTOR / BASIC ENGINE >> S00600 ZYLINDERKOPF / CYLINDER HEAD

Update Date : 2017/05/11 Print Date : 2022/02/19

No.	Part Number	Part Name (POL)	Part Name (ENG)	QTY	IC	Serial No./PIN	Kg	Remarks
010	16241-01750	MOTORHAKEN	HOOK ENGINE	1			0.080	
020	16241-01770	MOTORHAKEN	HOOK ENGINE	1			0.175	
030	01123-50814	BOLZEN	BOLT	2			0.010	
040	16282-03040	KOMP.ZYLINDERKOPF	COMP.CYLINDER HEAD	1			13.000	
050	15321-96260	KAPPE	CAP SEALING	1			0.014	
060	15261-96010	STOPFEN	PLUG	2			0.002	
070	16241-13540	EINLASSVENTILFUEHRUNG	GUIDE INLET VALVE	4			0.020	
080	16241-13560	AUSLASSVENTILFUEHRUNG	GUIDE EXHAUST VALVE	4			0.010	
090	15261-03370	STOEPSEL,ABDICHTUNG	CAP SEALING	3			0.005	
100	16241-03450	ZYLINDERKOPFSCHRAUBE	BOLT CYLINDER HEAD	18			0.050	
110	16282-03310	ZYLINDERKOPFDICHTUNG	GASKET CYLINDER HEAD	1			0.090	
120	31351-32830	TEMPERATURGEBER	THERMOSTAT UNIT	1			0.020	

BKIDA0097 >> KX71(H)[S.No.;>=55001] >> MOTOR / BASIC ENGINE >> S00700 VENTIL KIPPHEBEL / VALVE ROCKER ARM

Update Date : 2017/05/11 Print Date : 2022/02/19

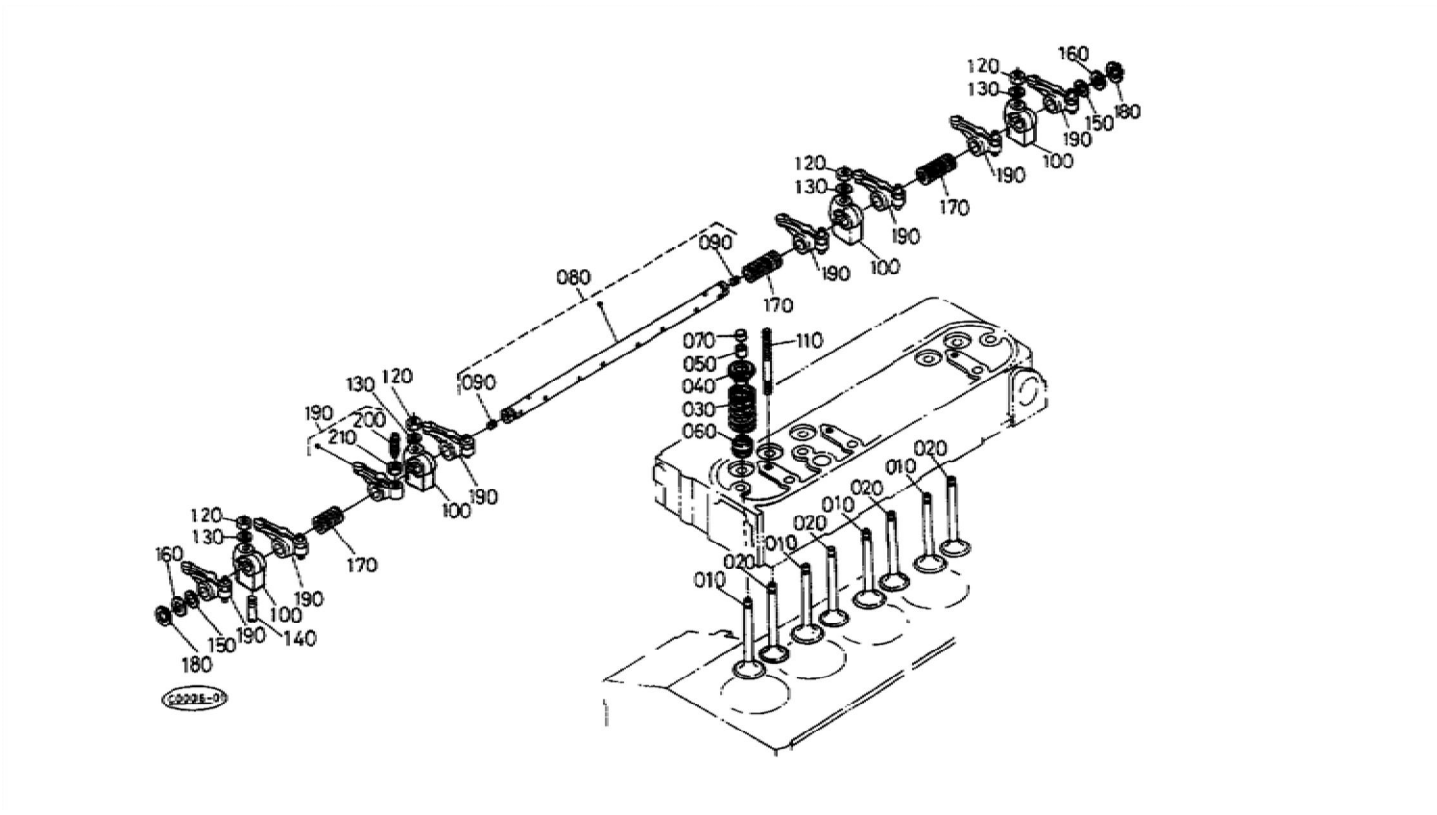

Thank you so much for reading.

Please click the “Buy Now!” button below to download the complete manual.

Buy Now

After you pay.

You can download the most perfect and complete manual in the world immediately.

Our support email:

ebooklibonline@outlook.com