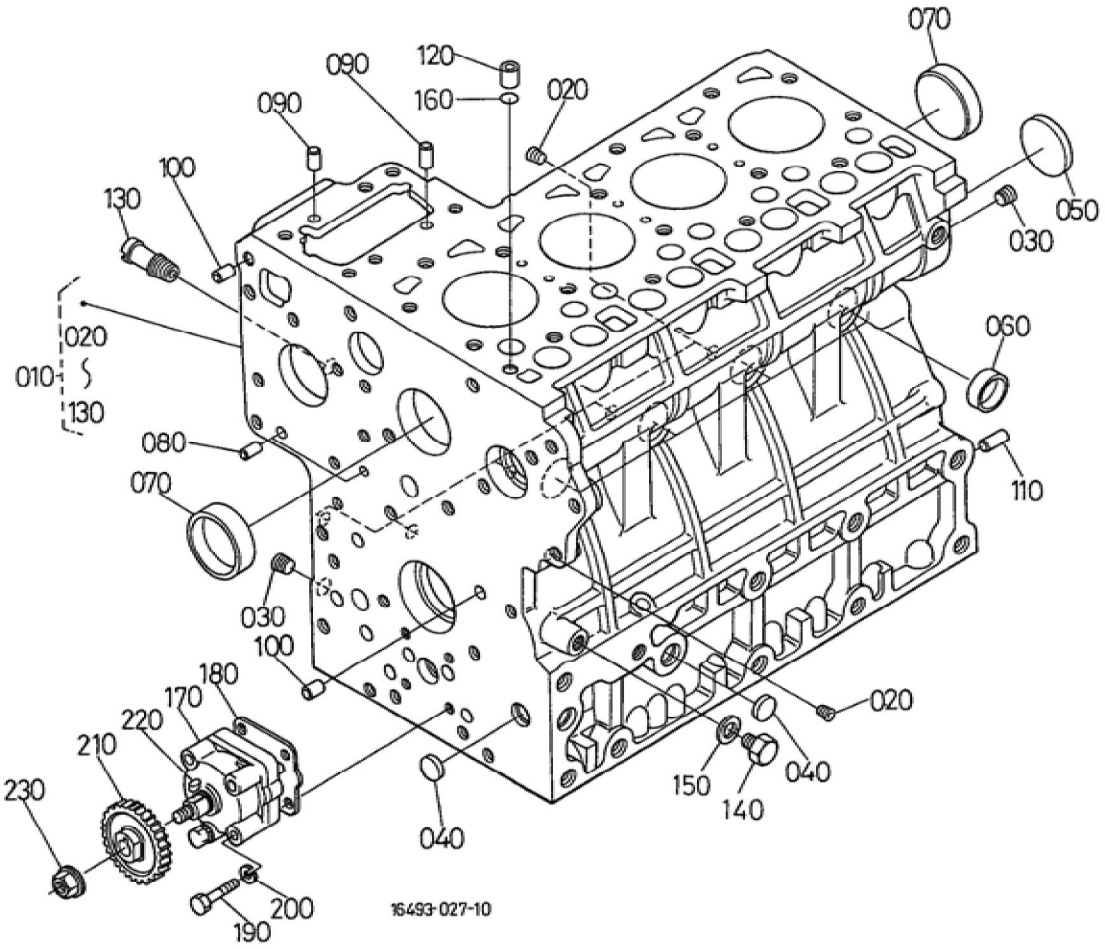
070
120
090
160
020
090
100
130
050
030
020
010
130
060
080
070
110
030
100
180
170
220
210
020
040
150
140
230
040
200
190
16493-027-10

BKIDK5345 >> L3600DT/HST >> MOTOR / ENGINE >> 000100 KURBELGHAEUSE / CRANKCASE

Update Date : 27-03-2020 Print Date : 04-03-2022

No.	Part Number	Part Name (POL)	Part Name (ENG)	QTY	IC	Serial No./PIN	Kg	Remarks
010	16493-01010	KOMP.KURBELGEHAEUSE	COMP.CRANKCASE	1		<=1Y2848	54.500	
010	16493-01014	KOMP.KURBELGEHAEUSE	COMP.CRANKCASE	1	>>	>=2A0001	54.500	
020	15521-96020	STOPFEN	PLUG	6			0.003	
030	15521-96030	STOPFEN	PLUG	2			0.007	
040	17391-96160	STOPFEN	PLUG,EXPANSION	3			0.003	
050	06311-75045	STOPFEN	PLUG,EXPANSION	1			0.026	
060	15221-03380	STOPFEN	CAP,SEALING	6			0.017	
070	15221-03390	STOPFEN	CAP,SEALING	2			0.030	
080	05012-00408	ZYLINDERSTIFT	PIN,STRAIGHT	2			0.001	
090	05012-00609	ZYLINDERSTIFT	PIN,STRAIGHT	2			0.003	
100	05012-00612	ZYLINDERSTIFT	PIN, STRAIGHT	2			0.003	
110	05012-01018	ZYLINDERSTIFT	PIN,STRAIGHT	1			0.012	
120	15221-33650	ROHRSTIFT	PIN,PIPE	1			0.004	
130	15321-73340	WASSERROHR	PIPE(WATER RETURN)	1			0.016	
140	15221-33610	STOPFEN	PLUG	1			0.009	
150	15021-33660	DICHTUNGSPLATTE	PACKING	1			0.001	
160	15221-33700	O RING	O RING	1			0.001	
170	15471-35012	GRP.OELPUMPE	ASSY PUMP OIL	1			0.550	
180	15296-35151	DICHTUNGSPLATTE	GASKET,OIL PUMP	1			0.000	
180	1A021-35150	DICHTUNGSPLATTE	GASKET,OIL PUMP	1	=		0.001	
190	01053-50650	BOLZEN	HEX.BOLT	4			0.011	
200	04512-50060	FEDERRING	WASHER,SPRING LOCK	4			0.001	
210	19202-35660	ZAHNRAD	GEAR,OIL PUMP DRIVE	1			0.230	

BKIDK5345 >> L3600DT/HST >> MOTOR / ENGINE >> 000100 KURBELGHAEUSE / CRANKCASE

Update Date : 27-03-2020 Print Date : 04-03-2022

No.	Part Number	Part Name (POL)	Part Name (ENG)	QTY	IC	Serial No./PIN	Kg	Remarks
220	05712-00410	KEIL	KEY,FEATHE R	1			0.001	
230	15221-35682	MUTTER	NUT	1			0.014	

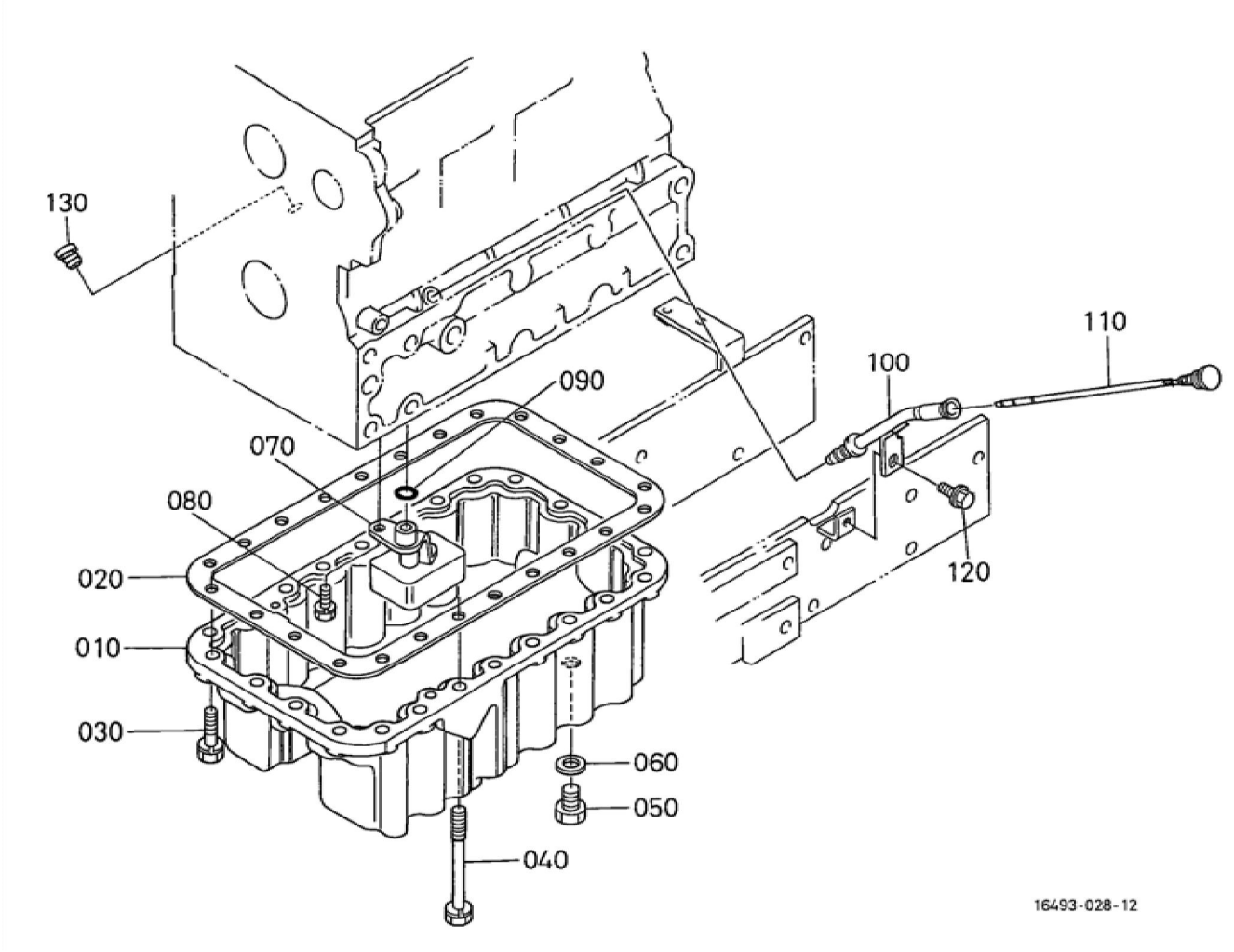
130
110
100
090
070
080
020
010
030
120
060
050
040
16493-028-12

BKIDK5345 >> L3600DT/HST >> MOTOR / ENGINE >> 000200 OL-FANGER / OIL PAN

Update Date : 27-03-2020 Print Date : 04-03-2022

No.	Part Number	Part Name (POL)	Part Name (ENG)	QTY	IC	Serial No./PIN	Kg	Remarks
010	17341-01610	OELWANNE	OIL PAN	1			4.100	
020	15815-01620	DICHTUNG	GASKET,OIL PAN	1			0.030	
030	01133-51028	BOLZEN	BOLT,SEMS	22			0.027	
040	17377-91010	BOLZEN	BOLT	2			0.080	
050	15261-33750	STOPFEN	W-PLUG	2		<=9460	0.034	
050	16427-33750	ENTLEERUNGSSTOPFEN	PLUG,DRAIN	2	>>	>=9461	0.030	
060	15109-33660	DICHTUNGSPLATTE	GASKET	2		<=9322	0.001	
060	6C090-58960	DICHTUNGSPLATTE	GASKET	2	>>	>=9323	0.005	
070	15411-32110	OELFILTER	FILTER(OIL)	1			0.240	
080	01123-50814	BOLZEN	BOLT,SEMS	1			0.010	
090	04816-00160	O RING	O RING	1			0.003	
090	04817-00160	O RING	O RING	1	>>		0.001	
100	TA140-36420	FUEHRUNG, OELMESSSTAB	GUIDE,OIL GAUGE	1			0.067	
110	TA140-36413	OELMESSSTAB	GAUGE,OIL	1			0.025	
120	01754-50816	SCHRAUBE	BOLT,FLANGE	1			0.011	
130	1G513-36550	STOPFEN, OELMESSSTAB	PLUG,OIL GAUGE	1		>=2A0001	0.004	

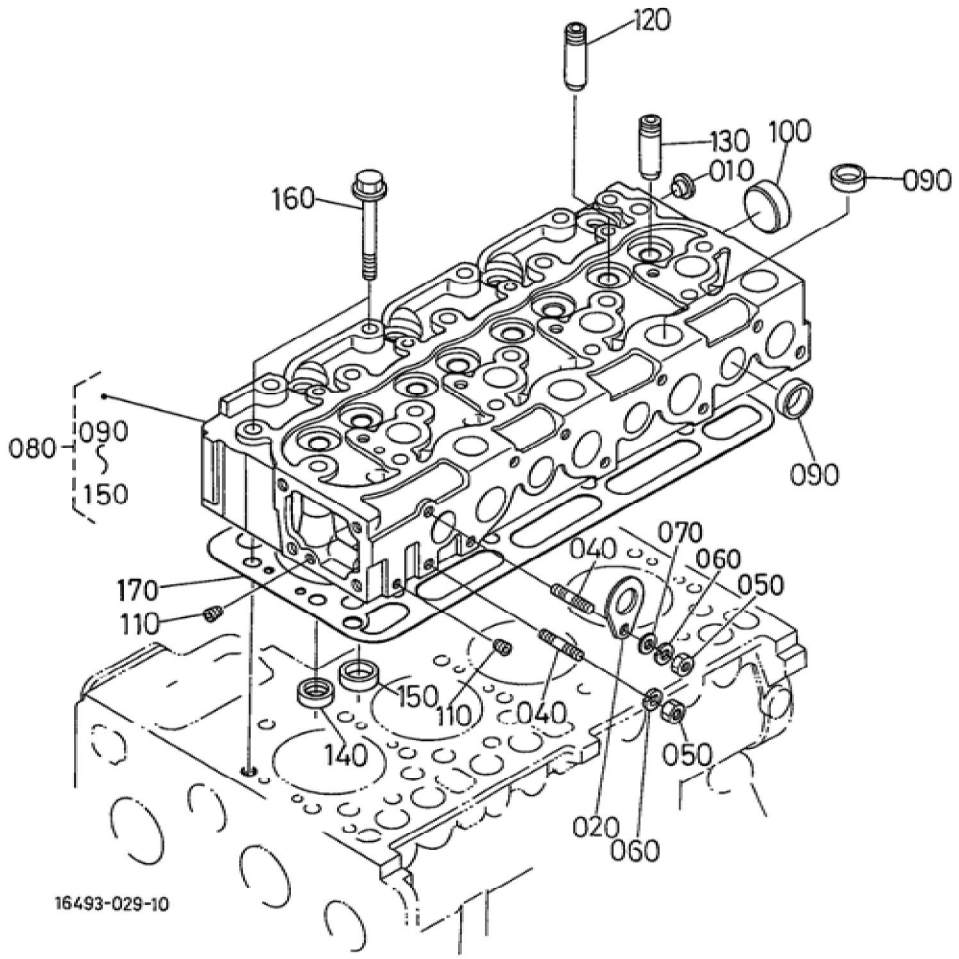
120
130
100
010
090
160
080
090
150
090
070
040
060
050
170
110
150
110
040
140
050
020
060
16493-029-10

BKIDK5345 >> L3600DT/HST >> MOTOR / ENGINE >> 000300 ZYLINDERKOPF / CYLINDER HEAD

Update Date : 27-03-2020 Print Date : 04-03-2022

No.	Part Number	Part Name (POL)	Part Name (ENG)	QTY	IC	Serial No./PIN	Kg	Remarks
010	09980-10075	KAPPE	CAP,PROTECTOR	1			0.001	
020	15221-01750	MOTORHAKEN	HOOK,ENGINE	1			0.040	
040	15471-91530	STEHBOLZEN	BOLT,STUD	2			0.010	
050	02156-50080	MUTTER	HEX.NUT	2			0.004	
060	04512-50080	FEDERRING	WASHER,SPRING LOCK	2			0.002	
070	04012-50080	SCHEIBE	WASHER,PLAIN	1			0.001	
080	16493-03040	KOMP.ZYLINDERKOPF	COMP.CYLINDER HEAD	1			19.700	
090	15221-03370	STOPFEN	PLUG,CUP TYPE	12			0.010	
100	15221-03490	STOPFEN	CAP,SEALING	1			0.020	
110	15261-96010	STOPFEN	PLUG	2			0.002	
130	1C010-13560	AUSLASSVENTILFUEHRUNG	GUIDE,EXHAUST VALVE	4			0.025	
140	16415-13620	VENTILSITZ, EINLASSVENTIL	SEAT,VALVE (INLET)	4			0.010	
150	16415-13612	VENTILSITZ, AUSLASSVENTIL	SEAT (EXHAUST VALVE)	4			0.010	
160	19013-03450	ZYLINDERKOPFSCHRAUBE	BOLT,HEAD (CYLINDER)	18			0.077	
170	16454-03310	ZYLINDERKOPFDICHTUNG	GASKET,CYL. HEAD	1			0.145	

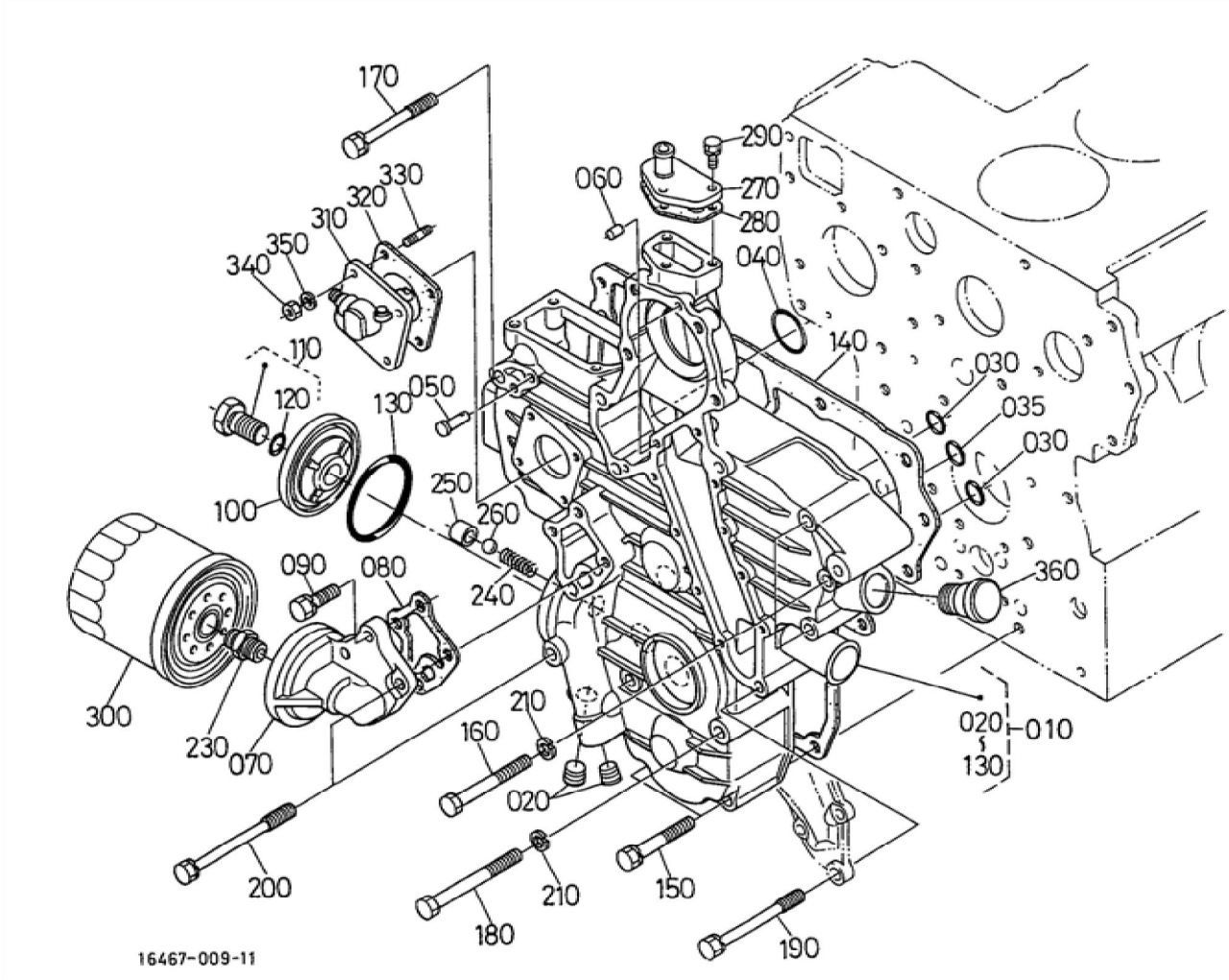
170
330
320
310
350
340
110
120
100
130
050
250
260
240
090
080
300
230
070
160
210
020
200
180
210
150
190
060
290
270
280
040
140
030
035
030
360
020
010
130
16467-009-11

BKIDK5345 >> L3600DT/HST >> MOTOR / ENGINE >> 000400 GETRIEBE GEHAEUSE / GEAR CASE

Update Date : 27-03-2020 Print Date : 04-03-2022

No.	Part Number	Part Name (POL)	Part Name (ENG)	QTY	IC	Serial No./PIN	Kg	Remarks
010	16705-04032	GRP.GETRIEBEGEHAEUSE	ASSY CASE,GEAR	1			4.200	
020	16241-96020	STOPFEN	PLUG	2			0.015	
030	04816-00150	O RING	O RING	2			0.003	
030	04817-00150	O RING	O RING	2	>>		0.001	
035	04816-00200	O RING	O RING	1			0.003	
035	04817-00200	O RING	O RING	1	>>		0.011	
040	04816-00360	O RING	O RING	1			0.003	
040	04817-00360	O RING	O RING	1	>>		0.001	
050	15221-56280	STARTFEDERSTIFT	PIN,START SPRING	1			0.006	
060	05012-00612	ZYLINDERSTIFT	PIN, STRAIGHT	2			0.003	
070	17331-32610	OELFILTERHALTER	SUPPORT,OIL FILTER	1			0.275	
080	17326-32620	DICHTUNGSPLATTE	GASKET	1			0.005	
090	01123-50825	BOLZEN	BOLT,SEMS	3			0.013	
100	17331-32880	DECKEL	COVER	1			0.075	
110	17331-32910	KOMP.BOLZEN	BOLT,COMP	1			0.070	
120	04816-00150	O RING	O RING	1	>>		0.003	
130	19202-96830	O RING	O RING	1			0.010	
140	17326-04132	DICHTUNG	GASKET,GEAR CASE	1			0.030	
150	01123-50860	BOLZEN	BOLT,SEMS	3			0.020	
160	01153-50870	BOLZEN	HEX.BOLT	3			0.026	
170	17367-91010	BOLZEN	BOLT	2			0.005	
180	01153-50880	BOLZEN	HEX.BOLT	2			0.030	
190	17367-91020	BOLZEN	BOLT	3			0.035	
200	17367-91030	BOLZEN	BOLT	2			0.038	
230	15521-32290	VERBINDUNGSSTUECK	JOINT,PIPE	1		<=9534	0.050	
230	1A021-32290	VERBINDUNGSSTUECK	PIPE(JOINT)	1	>>	>=9535	0.050	
240	15241-36950	FEDER	SPRING	1			0.004	
250	15521-36930	SITZ,VENTIL	SEAT,VALVE	1			0.015	

BKIDK5345 >> L3600DT/HST >> MOTOR / ENGINE >> 000400 GETRIEBE GEHAEUSE / GEAR CASE

Update Date : 27-03-2020 Print Date : 04-03-2022

No.	Part Number	Part Name (POL)	Part Name (ENG)	QTY	IC	Serial No./PIN	Kg	Remarks
260	07715-03213	KUGEL	BALL	1			0.004	
270	15521-73320	FLANSCH	FLANGE,WATER RETURN	1			0.040	
280	15766-73331	DICHTUNGSPLATTE	GASKET,RETURN FLANGE	1			0.000	
280	1A021-73330	DICHTUNGSPLATTE	GASKET,RETURN FLANGE	1	=		0.001	
290	01023-50620	BOLZEN	BOLT,SEMS	3			0.006	
300	17321-32430	OELFILTERPATRONE	CARTRIDGE, OIL FILTER	1			0.450	BESTELLEN SIE BITTE POS.300 NEUE TEILE
300	16414-32430	OELFILTERPATRONE	FILTER,OIL	1	=		0.450	ORDER BY REF.No.300 NEW PART.
300	HH164-32430	OELFILTERPATRONE	FILTER (CARTRIDGE, OIL)	1	>>		0.500	
310	38240-34660	GEHAEUSE, STUNDENZAEHLERANTRIEB	ASSY HOUR METER GEAR	1			0.335	
320	15296-88130	DICHTUNG	GASKET,H/METER UNIT	1			0.002	
330	15221-88210	STEHBOLZEN	BOLT,STUD	4			0.005	
340	02056-50060	MUTTER	HEX.NUT	4			0.002	
350	04512-50060	FEDERRING	WASHER,SPRING LOCK	4			0.001	
360	15571-33140	OELEINFUELLSSTOPFEN	PLUG,OIL FILLER	1		<=9572	0.030	
360	16427-33140	OELEINFUELLSSTOPFEN	PLUG,OIL FILLER	1	>>	>=9573	0.025	

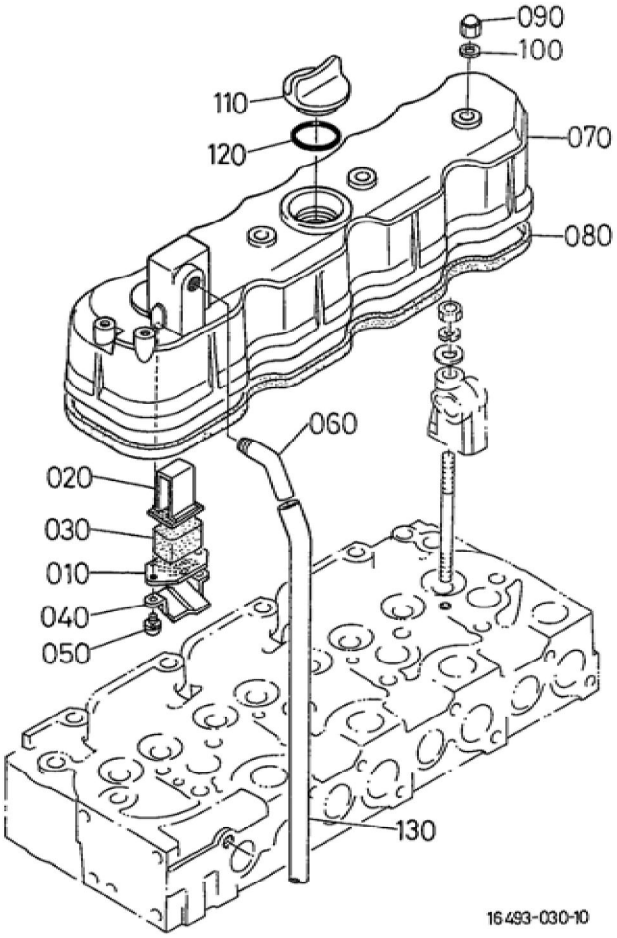
090
100
110
120
070
080
060
020
030
010
040
050
130
16493-030-10

BKIDK5345 >> L3600DT/HST >> MOTOR / ENGINE >> 000500 VENTILDECKEL / HEAD COVER

Update Date : 27-03-2020 Print Date : 04-03-2022

No.	Part Number	Part Name (POL)	Part Name (ENG)	QTY	IC	Serial No./PIN	Kg	Remarks
010	15521-05140	PLATTE,ELEMENT	PLATE,ELEMENT	1			0.005	
020	15521-05150	PLATTE,ELEMENT	PLATE,ELEMENT	1			0.010	
030	15521-05670	ENTLUEFTUNGSELEMENT	ELEMENT,BREATHER	1			0.010	
040	15521-05370	ENTLUEFTER	OIL SHIELD,BREATHER	1			0.005	
050	03034-50510	SCHRAUBE	SCREW,WSEMS(PAN HEAD)	2			0.003	
060	17365-05550	ANSCHLUSS	JOINT,BREATHER	1			0.065	
070	16454-14510	VENTILDECKEL	COVER,CYL. HEAD	1		<=9573	1.270	
070	15434-14510	VENTILDECKEL	COVER,CYL. HEAD	1	NI	>=1S0001	1.230	
080	15471-14520	VENTILDECKELDICHTUNG	GASKET,HEAD COVER	1			0.050	
090	15451-92330	MUTTER	NUT	4			0.008	
100	15021-33660	DICHTUNGSPLATTE	PACKING	4			0.001	
110	15852-33140	OELEINFUELLSSTOPFEN	PLUG,OIL FILLER	1		>=1S0001	0.038	
120	04816-50300	O RING	O RING	1		>=1S0001	0.001	
120	04817-50300	O RING	O RING	1	>>		0.001	
130	15837-05510	ENTLUEFTUNGSROHR	PIPE,BREATHER	1			0.060	

070 16454-1451-0

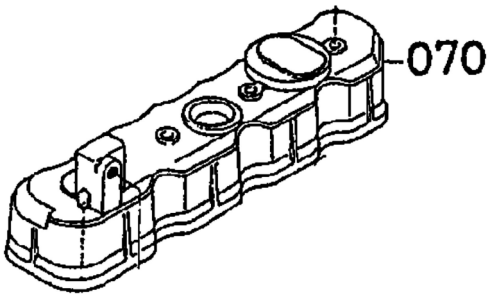

1G762-800-10

BKIDK5345 >> L3600DT/HST >> MOTOR / ENGINE >> 000500 VENTILDECKEL / HEAD COVER

Update Date : 27-03-2020 Print Date : 04-03-2022

No.	Part Number	Part Name (POL)	Part Name (ENG)	QTY	IC	Serial No./PIN	Kg	Remarks
070	16454-14510	VENTILDECKEL	COVER,CYL. HEAD	1		<=9573	1.270	
070	15434-14510	VENTILDECKEL	COVER,CYL. HEAD	1	NI	>=1S0001	1.230	

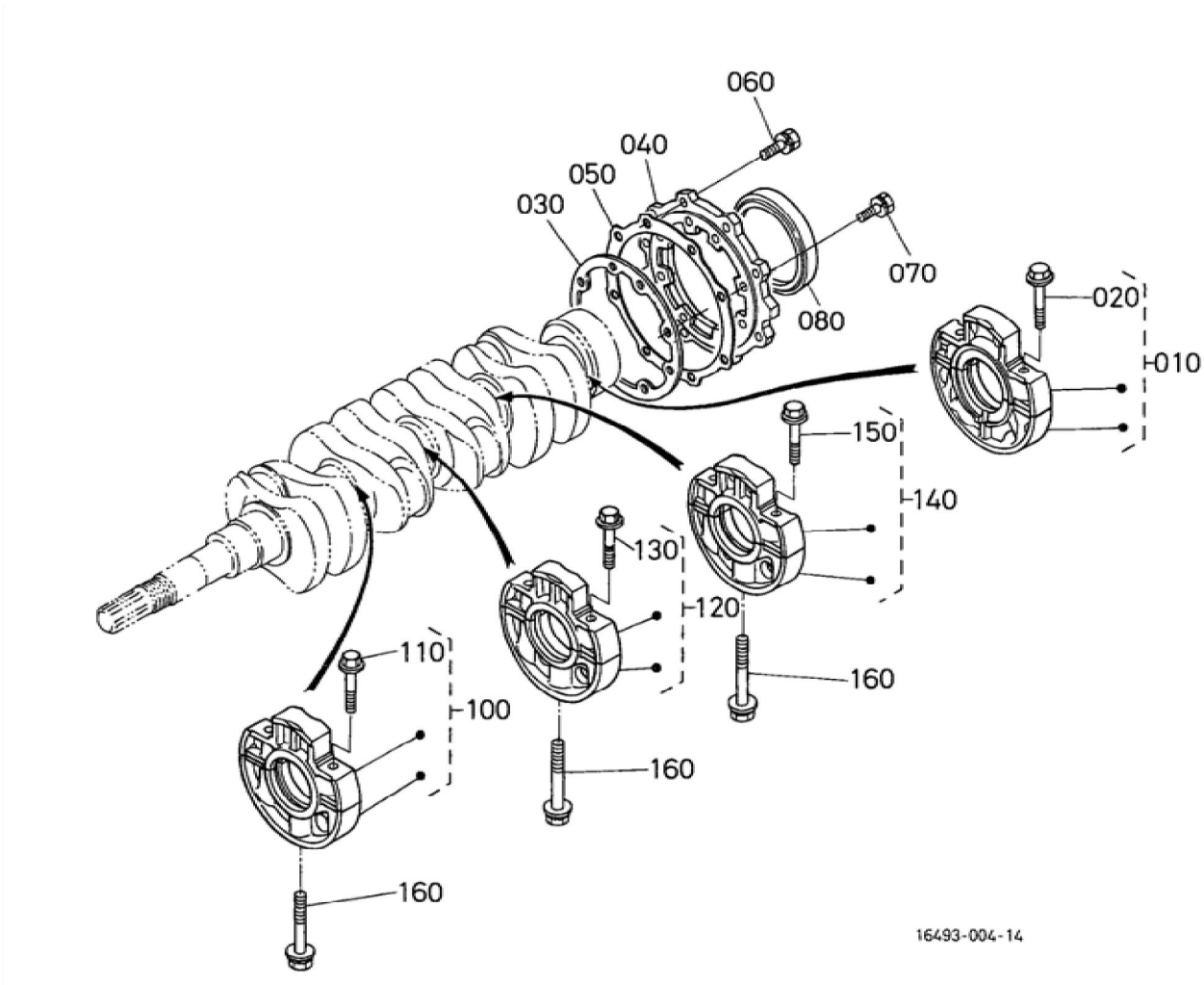
060
040
050
030
070
080
020
010
150
140
130
120
110
100
160
160
160
16493-004-14

Thank you so much for reading.

Please click the “Buy Now!” button below to download the complete manual.

Buy Now

After you pay.

You can download the most perfect and complete manual in the world immediately.

Our support email:

ebooklibonline@outlook.com