M115GX-4 · M125GX-4

FUITM 516 10

Item	Capacity	Change Interval
Engine Oil	14.6 L	after the first 50 hours of operation.Every 500 hours
Engine Oil Filter		after the first 50 hours of operation.Every 500 hours

Kubota

5GXDTSC-4 >> FREQUENTLY USED ITEMS / FREQUENTLY USED ITEMS >> 000000 HÄUFIG VERWENDETE ELEMENTE / FREQ

Update Date : 2019/12/06 Print Date : 2022/03/26

No.	Part Number	Part Name (POL)	Part Name (ENG)	QTY	IC	Serial No./PIN	Kg	Remarks
010	T0270-81810	ZUENDSCHLOSS KOMP.	ASSY KEY,MAIN SWITCH	1			0.255	
020	3C001-75040	WARNBLINKSCHALTER	SWITCH,HAZARD	1			0.015	
030	T0270-81840	GRP.SCHLUESSEL	ASSY KEY,MAIN SWITCH	1			0.023	
040	3S203-32072	SCHALTER	SWITCH,CONBI	1			0.272	
060	11521-39013	OELDRUCKSCHALTER	OIL SWITCH (F)	1			0.040	
070	T1060-30460	SICHERUNG 20A	FUSE,MINI (20A)	3			0.002	20A
080	T1060-30430	SICHERUNG 5A	FUSE,MINI (5A)	1			0.005	5A
090	T1060-30440	SICHERUNG 10A	FUSE,MINI (10A)	3			0.005	10A
100	T1060-30470	SICHERUNG 30A	FUSE,MINI (30A)	1			0.005	30A
110	T1060-30510	SICHERUNG 30A	FUSE	3			0.007	30A
120	3W999-00060	SICHERUNG	FUSE	3			0.006	40A
130	T1060-30520	SICHERUNG 40A	FUSE,SLOW BLOW(40A)	1			0.007	40A
140	3W999-00070	SICHERUNG	FUSE	1			0.006	60A
150	T1060-30430	SICHERUNG 5A	FUSE,MINI (5A)	12			0.005	5A
160	T1150-30480	SICHERUNG	FUSE	1			0.002	7.5A
170	T1060-30440	SICHERUNG 10A	FUSE,MINI (10A)	11			0.005	10A
180	T1060-30450	SICHERUNG 15A	FUSE,MINI (15A)	12			0.005	15A
190	T1060-30460	SICHERUNG 20A	FUSE,MINI (20A)	5			0.002	20A
200	T1060-30470	SICHERUNG 30A	FUSE,MINI (30A)	2			0.005	30A
210	T1275-91060	GLUEHBIRNE 35W	BULB	4			0.010	35W

Update Date : 2019/12/06 Print Date : 2022/03/26

No.	Part Number	Part Name (POL)	Part Name (ENG)	QTY	IC	Serial No./PIN	Kg	Remarks
220	3S223-75830	VENTIL,KOMP.	VALVE,ASSY (H3,35W)	4			0.019	H3,35W
230	3S200-75810	GLUEHBIRNE	BULB,LAMP (H9,12V65W)	2			0.022	H9,65W
240	T1880-99110	GLUEHBIRNE	BULB (12V21W)	2			0.020	21W
250	T1880-99140	GLUEHBIRNE	BULB(12V5W)	2			0.010	5W
260	T1880-99110	GLUEHBIRNE	BULB (12V21W)	2			0.020	21W
270	T1880-99120	GLUEHBIRNE	BULB (12V21/5W)	2			0.020	21/5W
280	3C581-54220	GLUEHBIRNE	BULB,ROOM LIGHT	1			0.002	5W
290	3F260-54220	GLUEHBIRNE	BULB	1			0.001	7,5W
300	HH1G0-32430	OELFILTERPATRONE	CARTRIDGE, OIL FILTER	1			1.075	
310	1J520-43060	FILTEREINSATZ KOMP	ASSY ELEMENT,FILTER	1			0.232	
320	HH1J0-43170	FILTEREINSATZ	FILTER(FUEL CARTRIDGE)	1		<=3JPZ999	0.650	
320	HH1J0-43172	KRAFTSTOFFILTER	FILTER(FUEL CARTRIDGE)	1	>>	>=3JQ0001	0.650	
330	1G410-52300	GRP.DRUCKFILTER	FILTER	1			0.025	
340	1G311-43380	WASSERABSCHEIDER, ELEMENT	ELEMENT	1			0.033	
350	1J520-05810	ELEMENT,KIT	ELEMENT,KIT	1		<=3JRZ999	0.060	
350	1J520-05812	ELEMENT,KIT	ELEMENT,KIT	1	>>	>=3JS0001	0.060	
360	HH3Y0-82590	HYDR.-FILTER	HYDR.-FILTER	1			1.680	
370	1J520-11222	INNENELEMENT	ELEMENT (INNER)	1			0.372	
380	3P300-11220	LUFTFILTEREINSATZ (AUSSEN)	ELEMENT,OUTER	1			1.500	
390	6A671-75090	DRUCKFILTER	FILTER	2			0.080	
400	T1855-71600	KABINENFILTER	FILTER	1			0.270	

Update Date : 2019/12/06 Print Date : 2022/03/26

No.	Part Number	Part Name (POL)	Part Name (ENG)	QTY	IC	Serial No./PIN	Kg	Remarks
410	3P903-15780	KEILRIEMEN	BELT	1			0.235	6PK2230RG1 482
420	17214-72020	KUEHLERVE RSCHLUSS	CAP,ASSY (RADIATOR)	1			0.050	
430	3S505-72852	SCHLAUCH	HOSE (WATER,LOW ER)	1			0.258	
440	3S505-72942	SCHLAUCH	HOSE (WATER UPPER)	1			0.420	

BKIDK5254 >> M125GXDTSC-4 >> MOTOR / ENGINE >> 400100 KURBELGEHAEUSE (OBER) / CRANKCASE (UPPER)

Update Date : 2019/12/06 Print Date : 2022/03/26

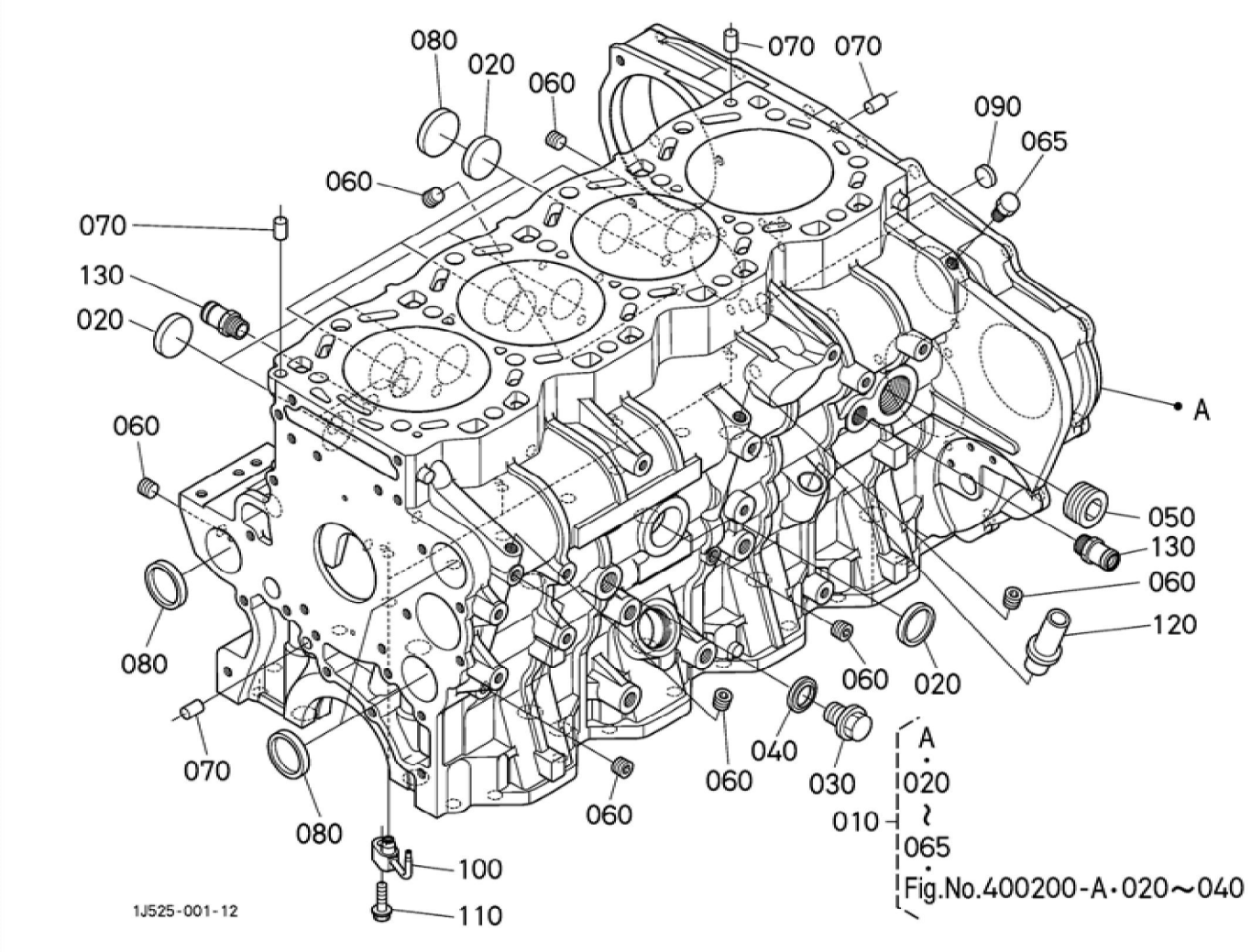

BKIDK5254 >> M125GXDTSC-4 >> MOTOR / ENGINE >> 400100 KURBELGEHAEUSE (OBER) / CRANKCASE (UPPER)

Update Date : 2019/12/06 Print Date : 2022/03/26

No.	Part Number	Part Name (POL)	Part Name (ENG)	QTY	IC	Serial No./PIN	Kg	Remarks
010	1G410-01035	KURBELGHAEUSE,KOMP.	CRANKCASE, ASSY	1			176.000	
020	15221-03490	STOPFEN	CAP,SEALING	8			0.020	
030	06311-55030	STOPFEN	PLUG	1			0.050	
040	04724-00170	DICHTUNGSPLATTE	GASKET	1			0.005	
050	16683-96020	STOPFEN	PLUG	1			0.088	
060	15521-96020	STOPFEN	PLUG	8			0.003	
065	1J527-96020	STECKER	PLUG(R1/8)	1			0.013	
070	05012-01016	ZYLINDERSTIFT	PIN STRAIGHT	4			0.010	
080	15451-96280	STOEPSEL,ABDICHTUNG	CAP,SEALING	6			0.026	
090	16851-96270	KAPPE	CAP,SEALING	1			0.005	
100	1G410-01570	DUESE	JET(OIL)	4			0.025	
110	01754-50620	SCHRAUBE	BOLT,FLANGE	4			0.007	
120	1C040-33212	STIFT	PIPE,OIL	1			0.025	
130	1C010-37114	ADAPTER, WASSERROHR	JOINT,WATER PIPE	4			0.020	

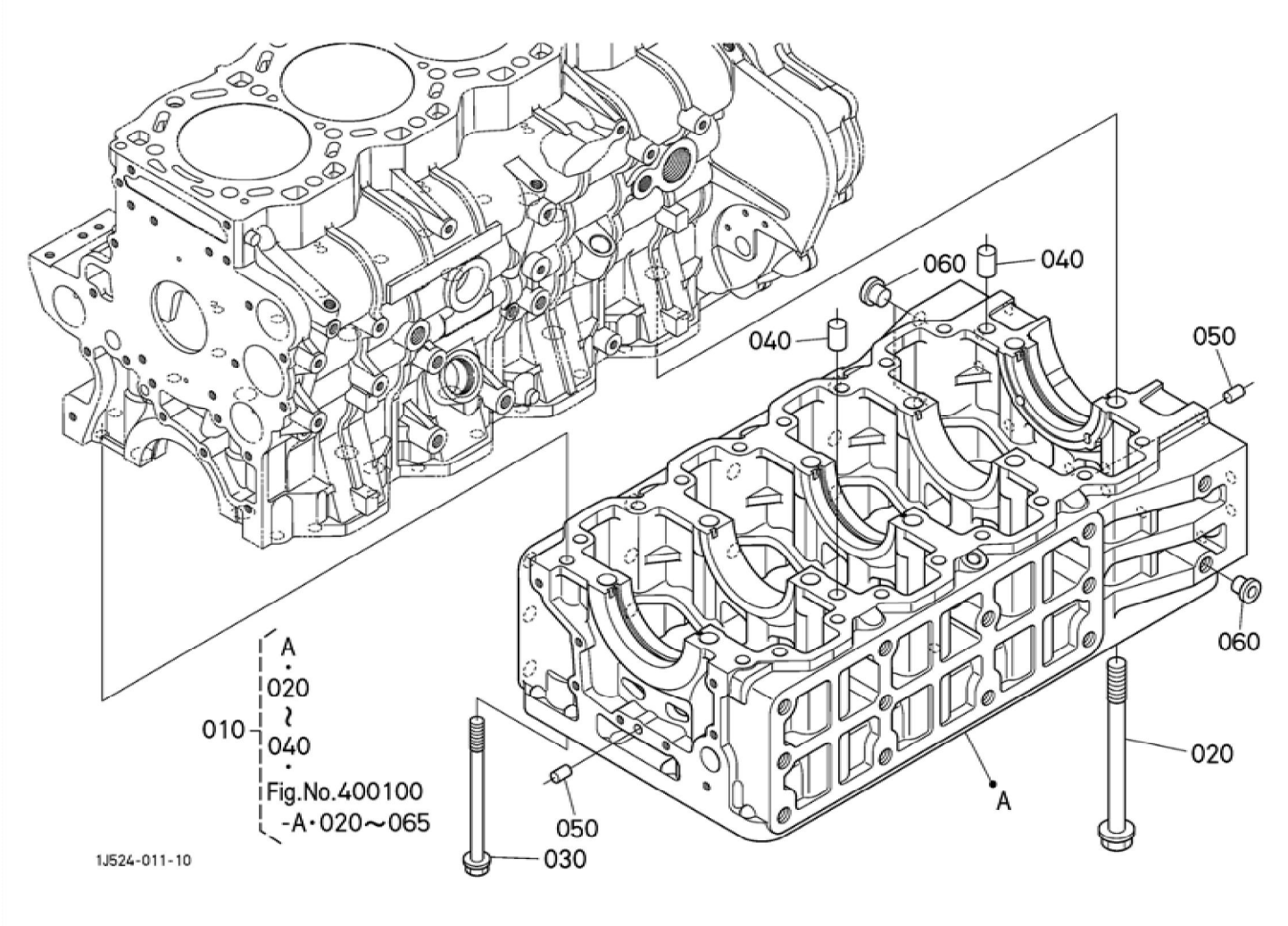
060
040
040
050
060
020
A
050
030
010
A
020
040
Fig.No.400100
-A·020～065
1J524-011-10

BKIDK5254 >> M125GXDTSC-4 >> MOTOR / ENGINE >> 400200 KURBELGEHAEUSE (UNTEN) / CRANKCASE (LOWER)

Update Date : 2019/12/06 Print Date : 2022/03/26

No.	Part Number	Part Name (POL)	Part Name (ENG)	QTY	IC	Serial No./PIN	Kg	Remarks
010	1G410-01035	KURBELGHAEUSE,KOMP.	CRANKCASE, ASSY	1			176.000	
020	1G410-99000	BOLZEN	BOLT	10			0.296	
030	1G410-91010	BOLZEN	BOLT	18			0.133	
040	1C011-94510	ZYLINDERSTIFT	PIN,STRAIGHT	2			0.040	
050	05012-01016	ZYLINDERSTIFT	PIN STRAIGHT	2			0.010	
060	33300-90910	STOPFEN	PLUG	3			0.002	

BKIDK5254 >> M125GXDTSC-4 >> MOTOR / ENGINE >> 401000 OELWANNE / OIL PAN

Update Date : 2019/12/06 Print Date : 2022/03/26

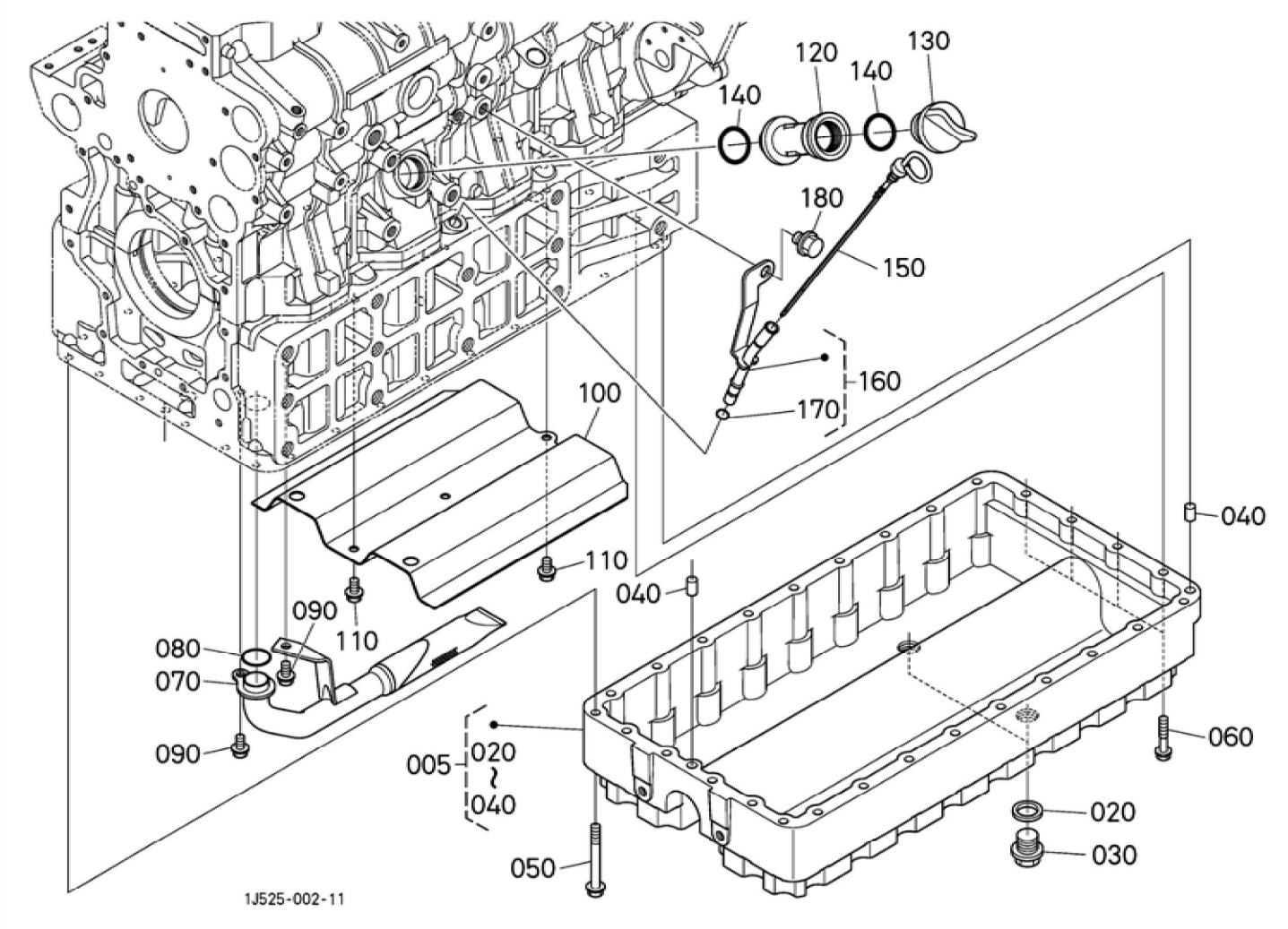

BKIDK5254 >> M125GXDTSC-4 >> MOTOR / ENGINE >> 401000 OELWANNE / OIL PAN

Update Date : 2019/12/06 Print Date : 2022/03/26

No.	Part Number	Part Name (POL)	Part Name (ENG)	QTY	IC	Serial No./PIN	Kg	Remarks
005	1G410-01590	OELWANNE,KOMP.	PAN,OIL,ASSY	1			25.000	
020	15451-96670	DICHTUNG	PACKING	2			0.003	
030	15707-33750	ENTLEERUNGSSTOPFEN	PLUG(DRAIN)	2			0.095	
040	05012-01016	ZYLINDERSTIFT	PIN STRAIGHT	2			0.010	
050	1G772-91010	BOLZEN	BOLT,FLANGE	24			0.030	
060	1G410-91022	BOLZEN	BOLT,FLANGE	4			0.018	
070	1G410-32110	OELFILTER	FILTER,OIL	1		<=3KFZ999	0.330	
070	1G410-32112	OELFILTER	FILTER,OIL	1	>>	>=3KG0001	0.330	
080	04814-05250	O RING	O RING	1			0.001	
090	01754-50812	SCHRAUBE	BOLT,FLANGE	2		<=3KFZ999	0.008	
090	01754-50814	SCHRAUBE	BOLT,FLANGE	2	>>	>=3KG0001	0.012	
100	1G410-01673	STAUBLECH	PLATE,BAFFLE	1			0.820	
110	01754-50812	SCHRAUBE	BOLT,FLANGE	3		<=3KFZ999	0.008	
110	01754-50814	SCHRAUBE	BOLT,FLANGE	3	>>	>=3KG0001	0.012	
120	15951-33113	OELFILTERFLANSCH	FLANGE,OIL FILLER	1			0.130	
130	E9151-33140	OELEINFUELLSTOPFEN	PLUG(OIL FILLER)	1			0.017	
140	04817-50300	O RING	O RING	2			0.001	
150	1G410-36413	OELMESSSTAB	GAUGE,OIL	1			0.028	
160	1G410-36500	GRP.FUEHRUNG	GUIDE,ASSY (OIL GAUGE)	1			0.102	
170	04814-00090	O RING	O RING	1			0.001	
180	01774-51212	SCHRAUBE	BOLT,FLANGE	1			0.028	

Update Date : 2019/12/06 Print Date : 2022/03/26

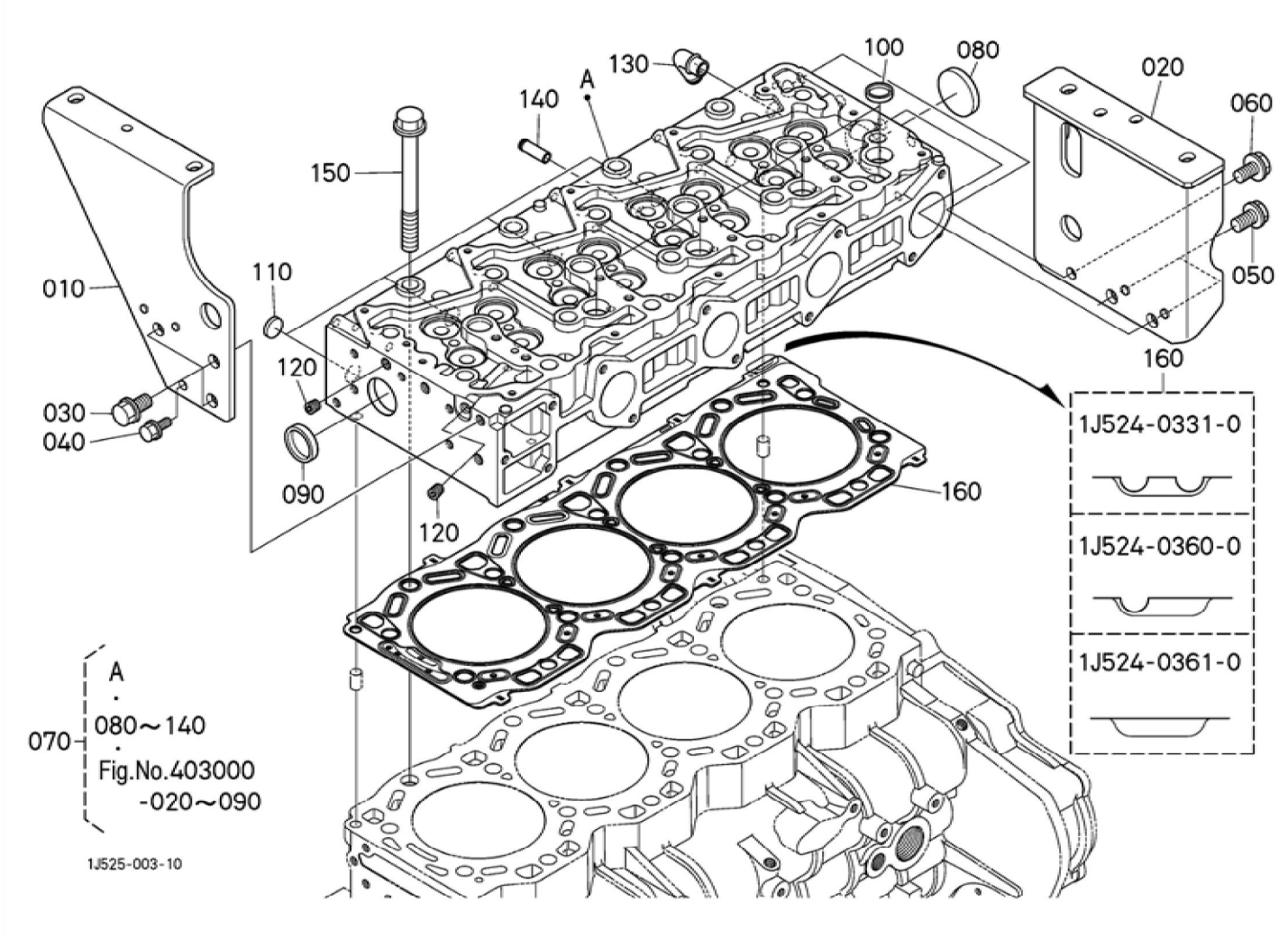

BKIDK5254 >> M125GXDTSC-4 >> MOTOR / ENGINE >> 402000 ZYLINDERKOPF / CYLINDER HEAD

Update Date : 2019/12/06 Print Date : 2022/03/26

No.	Part Number	Part Name (POL)	Part Name (ENG)	QTY	IC	Serial No./PIN	Kg	Remarks
010	3Y505-12612	HALTER	BRACKET,FRONT	1			1.702	
020	3S505-12620	HALTER	BRACKET (REAR,DPF)	1			2.540	
030	01774-51220	SCHRAUBE	BOLT,FLANGE	3			0.030	
040	01754-50816	SCHRAUBE	BOLT,FLANGE	1			0.011	
050	01774-51220	SCHRAUBE	BOLT,FLANGE	2			0.030	
060	01774-51020	SCHRAUBE	BOLT,FLANGE	1			0.020	
070	1J524-03020	GRP.ZYLINDERKOPF	HEAD,CYLINDER,ASSY	1			45.000	
080	15221-03390	STOPFEN	CAP,SEALING	1			0.030	
090	15221-03490	STOPFEN	CAP,SEALING	1			0.020	
100	15221-03370	STOPFEN	PLUG,CUP TYPE	4			0.010	
110	15261-03370	STOEPSEL,ABDICHTUNG	CAP,SEALING	4			0.005	
120	15521-96020	STOPFEN	PLUG	2			0.003	
130	1G777-05550	ROHRSCHALTUNG	JOINT,BREATHER	1			0.025	
140	16241-73370	ROHR	PIPE,WATER RETURN	1			0.007	
150	1J524-03450	ZYLINDERKOPFSCHRAUBE	BOLT (CYLINDER HEAD)	18			0.160	
160	1J524-03310	ZYLINDERKOPFDICHTUNG	GASKET (CYLINDER HEAD)	1			0.360	STANDARD/ 2 STUFEN
160	1J524-03600	ZYLINDERKOPFDICHTUNG	GASKET (CYLINDER HEAD)	1			0.400	VERWENDUNG / 1 KERBE
160	1J524-03610	ZYLINDERKOPFDICHTUNG	GASKET (CYLINDER HEAD)	1			0.450	VERWENDUNG / KEINE KERBE

Update Date : 2019/12/06 Print Date : 2022/03/26

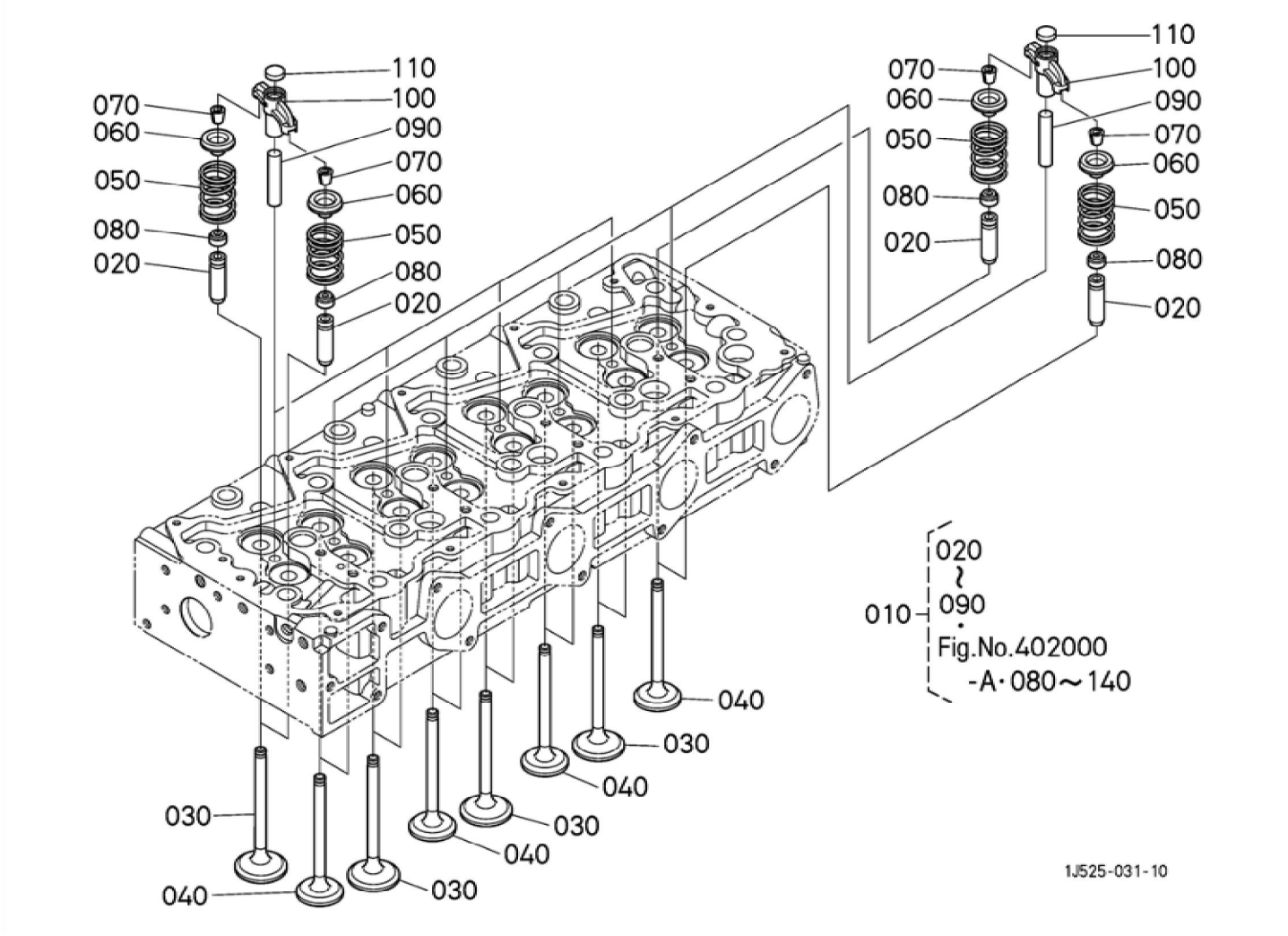

Thank you so much for reading.

Please click the “Buy Now!” button below to download the complete manual.

Buy Now

After you pay.

You can download the most perfect and complete manual in the world immediately.

Our support email:

ebooklibonline@outlook.com