BKIDK5213 >> M7172P >> MOTOR / ENGINE >> 400100 KURBELGEHAEUSE (OBER) / CRANKCASE (UPPER)

Update Date : 2020/05/28 Print Date : 2022/04/18

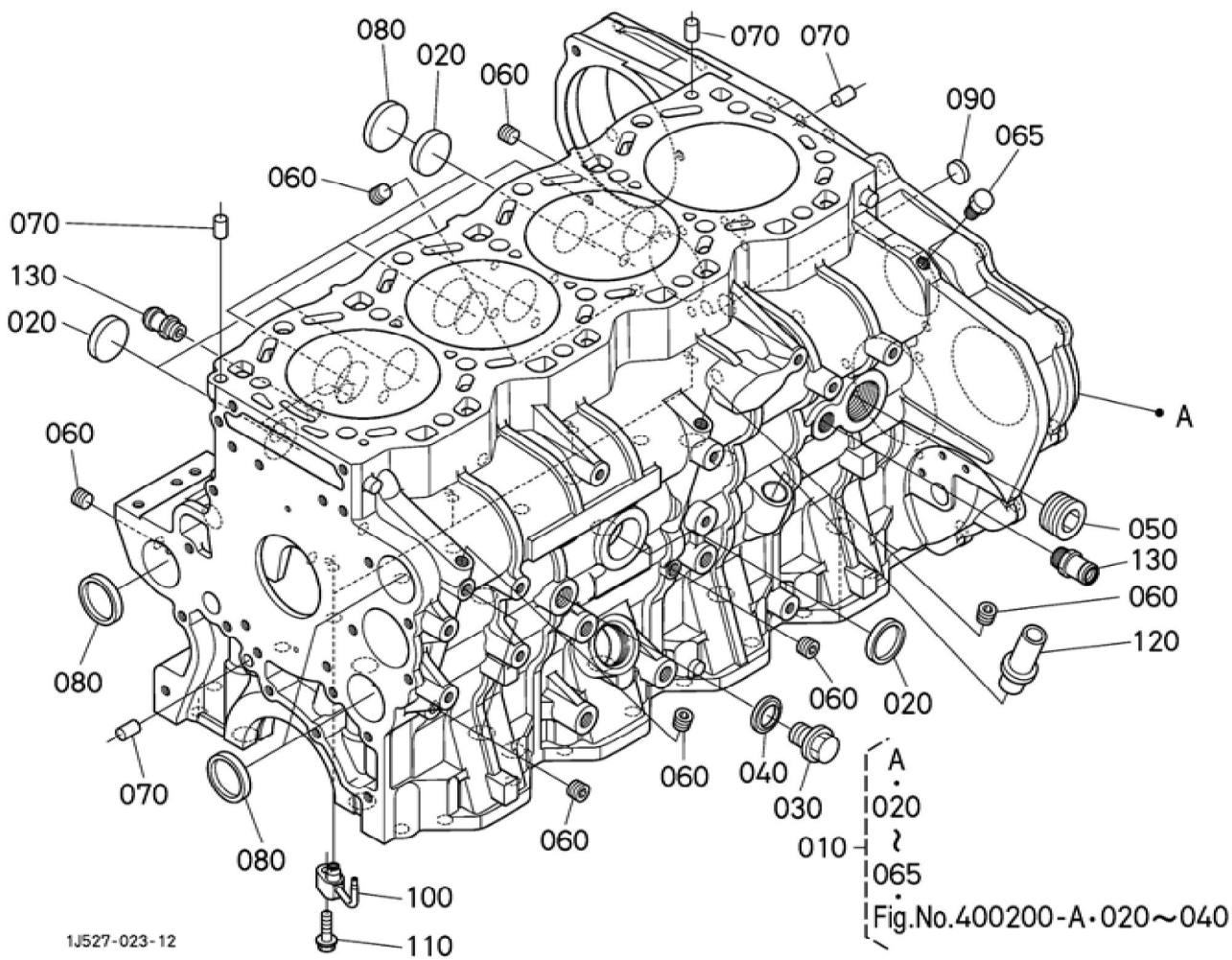

BKIDK5213 >> M7172P >> MOTOR / ENGINE >> 400100 KURBELGEHAEUSE (OBER) / CRANKCASE (UPPER)

Update Date : 2020/05/28 Print Date : 2022/04/18

No.	Part Number	Part Name (POL)	Part Name (ENG)	QTY	IC	Serial No./PIN	Kg	Remarks
010	1G410-01034	GRP. KURBELGEHAEUSE	CRANKCASE, ASSY	1		<=3JHZ999	176.000	
010	1G410-01035	KURBELGHAEUSE,KOMP.	CRANKCASE, ASSY	1	>>	>=3JJ0001	176.000	
020	15221-03490	STOPFEN	CAP,SEALING	8			0.020	
030	06311-55030	STOPFEN	PLUG	1			0.050	AUßER GEBRAUCH
040	04724-00170	DICHTUNGSPLATTE	GASKET	1			0.005	AUßER GEBRAUCH
050	16683-96020	STOPFEN	PLUG	1			0.088	
060	15521-96020	STOPFEN	PLUG	8			0.003	
065	1J527-96020	STECKER	PLUG(R1/8)	1			0.013	
070	05012-01016	ZYLINDERSTIFT	PIN STRAIGHT	4			0.010	
080	15451-96280	STOEPSEL,ABDICHTUNG	CAP,SEALING	6			0.026	
090	16851-96270	KAPPE	CAP,SEALING	1			0.005	
100	1G410-01570	DUESE	JET(OIL)	4			0.025	
110	01754-50620	SCHRAUBE	BOLT,FLANGE	4			0.007	
120	1C040-33212	STIFT	PIPE,OIL	1			0.025	
130	1C010-37114	ADAPTER, WASSERROHR	JOINT,WATER PIPE	4			0.020	

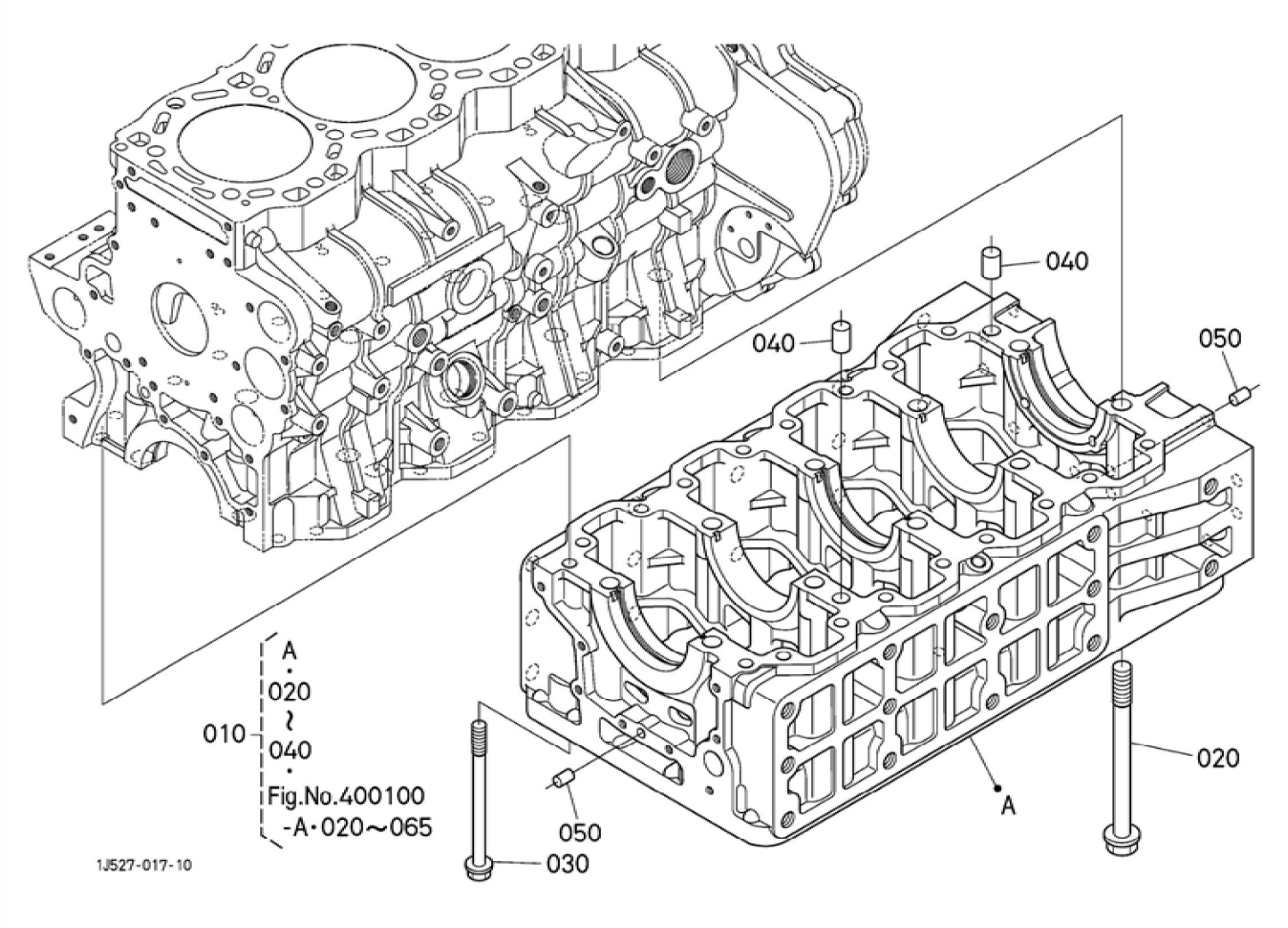
040
040
050
A
020
~
010
040
Fig.No.400100
-A・020～065
020
A
050
030
1J527-017-10

BKIDK5213 >> M7172P >> MOTOR / ENGINE >> 400200 KURBELGEHAEUSE (UNTEN) / CRANKCASE (LOWER)

Update Date : 2020/05/28 Print Date : 2022/04/18

No.	Part Number	Part Name (POL)	Part Name (ENG)	QTY	IC	Serial No./PIN	Kg	Remarks
010	1G410-01034	GRP. KURBELGEHAEUSE	CRANKCASE, ASSY	1		<=3JHZ999	176.000	
010	1G410-01035	KURBELGHAEUSE,KOMP.	CRANKCASE, ASSY	1	>>	>=3JJ0001	176.000	
020	1G410-99000	BOLZEN	BOLT	10			0.296	
030	1G410-91010	BOLZEN	BOLT	18			0.133	
040	1C011-94510	ZYLINDERSTIFT	PIN,STRAIGHT	2			0.040	
050	05012-01016	ZYLINDERSTIFT	PIN STRAIGHT	2			0.010	

DK5213 >> M7172P >> MOTOR / ENGINE >> 401001 ÖLABSCHEIDER [MIT LUFTKOMPRESSOR] / OIL PAN [WITH AIR COMPRES

Update Date : 2020/05/28 Print Date : 2022/04/18

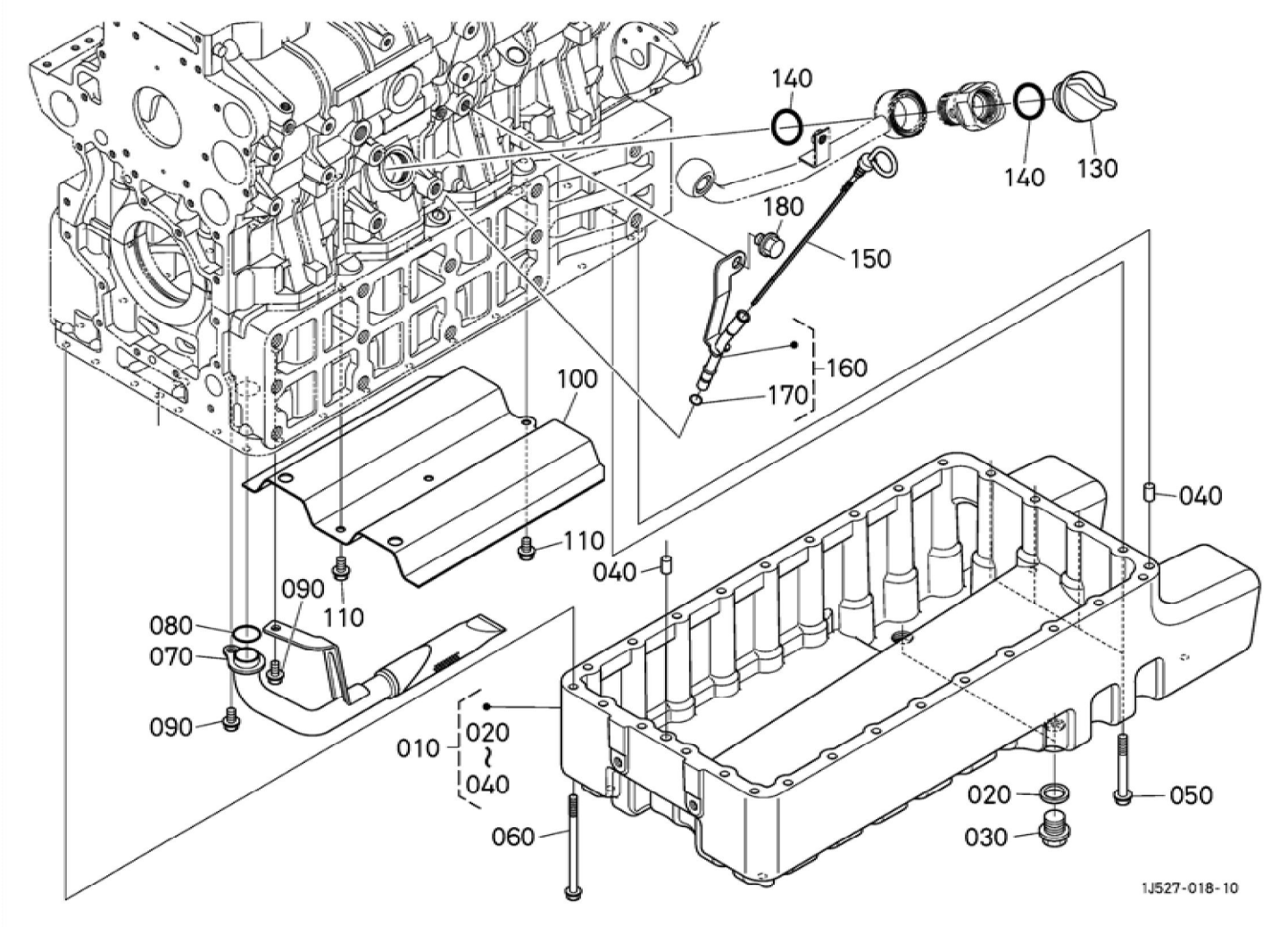

DK5213 >> M7172P >> MOTOR / ENGINE >> 401001 ÖLABSCHEIDER [MIT LUFTKOMPRESSOR] / OIL PAN [WITH AIR COMPRES

Update Date : 2020/05/28 Print Date : 2022/04/18

No.	Part Number	Part Name (POL)	Part Name (ENG)	QTY	IC	Serial No./PIN	Kg	Remarks
010	1J527-01590	OELWANNE,KOMP.	PAN,OIL,ASSY	1			36.500	
020	15451-96670	DICHTUNG	PACKING	2			0.003	
030	15707-33750	ENTLEERUNGSSTOPFEN	PLUG(DRAIN)	2			0.095	
040	05012-01016	ZYLINDERSTIFT	PIN STRAIGHT	2			0.010	
050	1G772-91010	BOLZEN	BOLT,FLANGE	4			0.030	
060	1J527-91010	SCHRAUBE	BOLT,FLANGE	24			0.045	
070	1J527-32110	OELFILTER	FILTER(OIL)	1		<=3KFZ999	0.360	
070	1G421-32110	OELFILTER	FILTER. 1 OIL	1	>>	>=3KG0001	0.360	
080	04814-05250	O RING	O RING	1			0.001	
090	01754-50812	SCHRAUBE	BOLT,FLANGE	2		<=3KFZ999	0.008	
090	01754-50814	SCHRAUBE	BOLT,FLANGE	2	NI	>=3KG0001	0.012	
100	1G410-01673	STAUBLECH	PLATE,BAFFLE	1			0.820	
110	01754-50812	SCHRAUBE	BOLT,FLANGE	3		<=3KFZ999	0.008	
110	01754-50814	SCHRAUBE	BOLT,FLANGE	3	NI	>=3KG0001	0.012	
130	E9151-33140	OELEINFUELLSTOPFEN	PLUG(OIL FILLER)	1			0.017	
140	04817-50300	O RING	O RING	2			0.001	
150	1G410-36413	OELMESSSTAB	GAUGE,OIL	1			0.028	
160	1G410-36500	GRP.FUEHRUNG	GUIDE,ASSY (OIL GAUGE)	1			0.102	
170	04814-00090	O RING	O RING	1			0.001	
180	01774-51212	SCHRAUBE	BOLT,FLANGE	1			0.028	

Update Date : 2020/05/28 Print Date : 2022/04/18

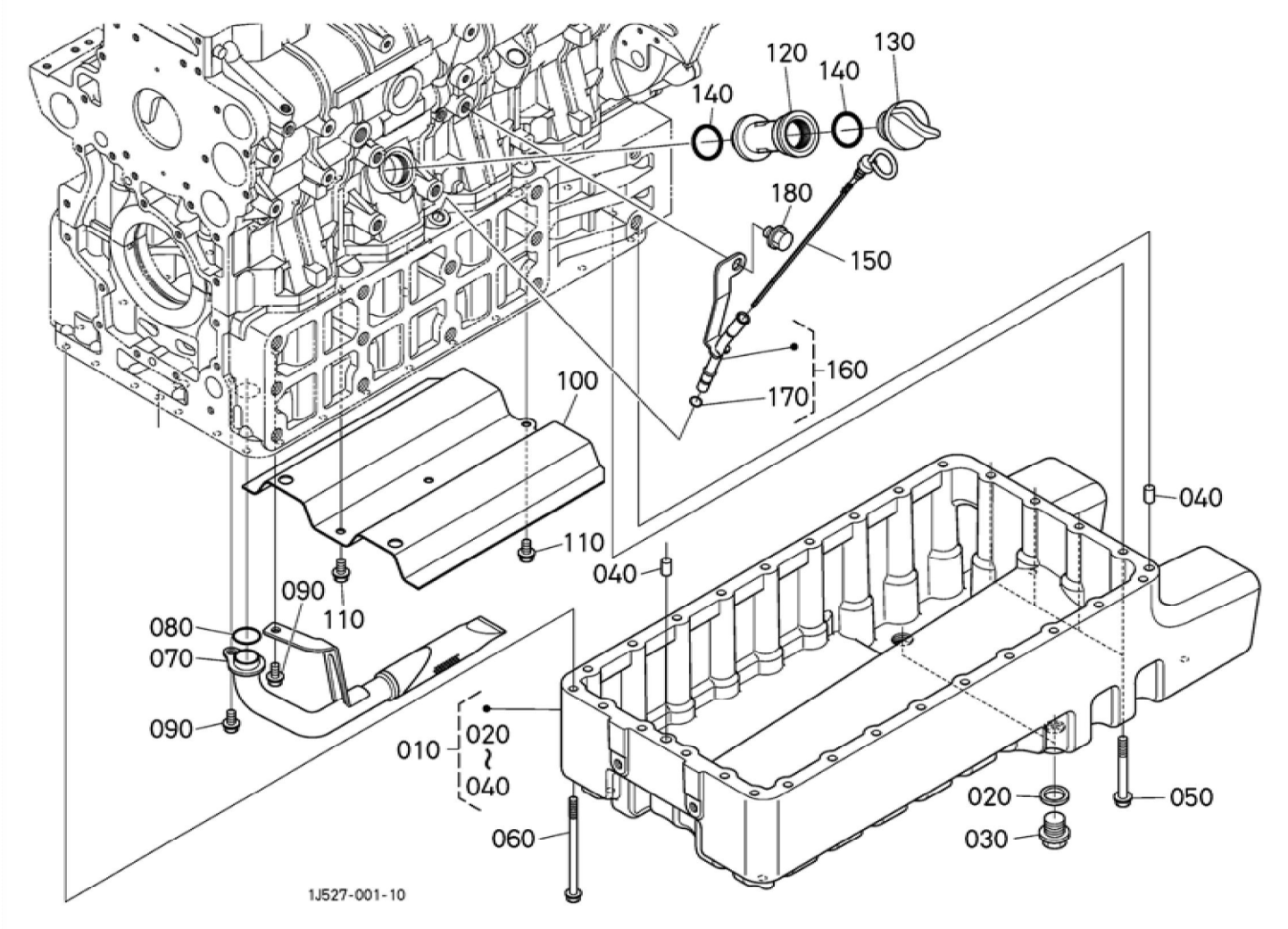

DK5213 >> M7172P >> MOTOR / ENGINE >> 401002 ÖLABSCHEIDER [OHNE LUFTKOMPRESSOR] / OIL PAN [W/O AIR COMPRES

Update Date : 2020/05/28 Print Date : 2022/04/18

No.	Part Number	Part Name (POL)	Part Name (ENG)	QTY	IC	Serial No./PIN	Kg	Remarks
010	1J527-01590	OELWANNE,KOMP.	PAN,OIL,ASSY	1			36.500	
020	15451-96670	DICHTUNG	PACKING	2			0.003	
030	15707-33750	ENTLEERUNGSSTOPFEN	PLUG(DRAIN)	2			0.095	
040	05012-01016	ZYLINDERSTIFT	PIN STRAIGHT	2			0.010	
050	1G772-91010	BOLZEN	BOLT,FLANGE	4			0.030	
060	1J527-91010	SCHRAUBE	BOLT,FLANGE	24			0.045	
070	1J527-32110	OELFILTER	FILTER(OIL)	1		<=3KFZ999	0.360	
070	1G421-32110	OELFILTER	FILTER. 1 OIL	1	>>	>=3KG0001	0.360	
080	04814-05250	O RING	O RING	1			0.001	
090	01754-50812	SCHRAUBE	BOLT,FLANGE	2		<=3KFZ999	0.008	
090	01754-50814	SCHRAUBE	BOLT,FLANGE	2	NI	>=3KG0001	0.012	
100	1G410-01673	STAUBLECH	PLATE,BAFFLE	1			0.820	
110	01754-50812	SCHRAUBE	BOLT,FLANGE	3		<=3KFZ999	0.008	
110	01754-50814	SCHRAUBE	BOLT,FLANGE	3	NI	>=3KG0001	0.012	
120	15951-33113	OELFILTERFLANSCH	FLANGE,OIL FILLER	1			0.130	
130	E9151-33140	OELEINFUELLSTOPFEN	PLUG(OIL FILLER)	1			0.017	
140	04817-50300	O RING	O RING	2			0.001	
150	1G410-36413	OELMESSSTAB	GAUGE,OIL	1			0.028	
160	1G410-36500	GRP.FUEHRUNG	GUIDE,ASSY (OIL GAUGE)	1			0.102	
170	04814-00090	O RING	O RING	1			0.001	
180	01774-51212	SCHRAUBE	BOLT,FLANGE	1			0.028	

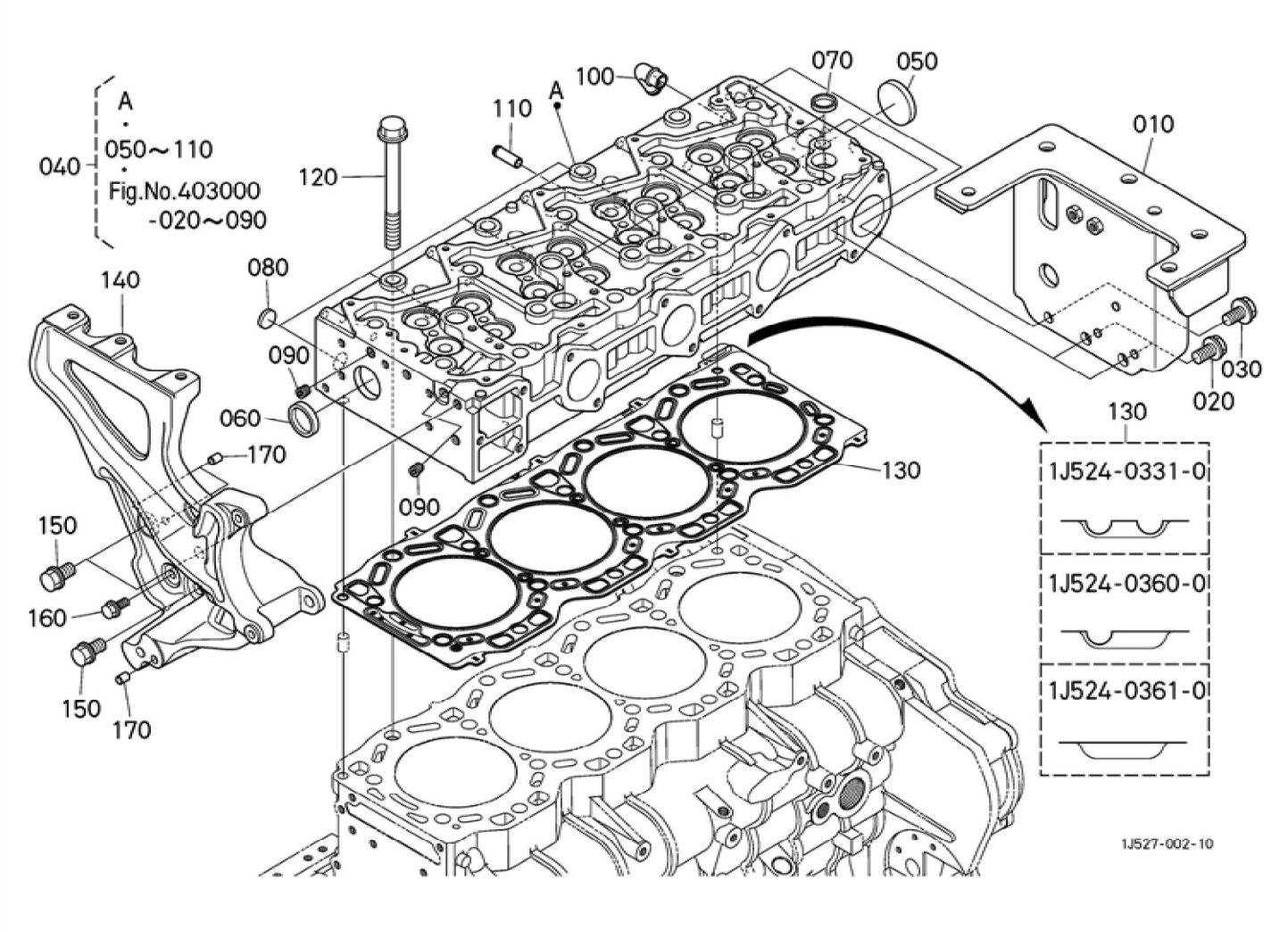
A
050～110
Fig.No.403000
-020～090
040
120
110
A
100
070
050
010
140
080
090
060
170
090
130
150
160
150
170
030
020
130
1J524-0331-0
1J524-0360-0
1J524-0361-0
1J527-002-10

BKIDK5213 >> M7172P >> MOTOR / ENGINE >> 402000 ZYLINDERKOPF / CYLINDER HEAD

Update Date : 2020/05/28 Print Date : 2022/04/18

No.	Part Number	Part Name (POL)	Part Name (ENG)	QTY	IC	Serial No./PIN	Kg	Remarks
010	3J030-19754	HALTER	BRACKET (DPF,R)	1		<=3KXZ999	3.500	
010	3J030-19755	HALTER	BRACKET (DPF,R)	1	>>	>=3KY0001	3.500	
020	01774-51220	SCHRAUBE	BOLT,FLANGE	2			0.030	
030	01774-51020	SCHRAUBE	BOLT,FLANGE	1			0.020	
040	1J524-03020	GRP.ZYLINDERKOPF	HEAD,CYLINDER,ASSY	1			45.000	
050	15221-03390	STOPFEN	CAP,SEALING	1			0.030	
060	15221-03490	STOPFEN	CAP,SEALING	1			0.020	
070	15221-03370	STOPFEN	PLUG,CUP TYPE	4			0.010	
080	15261-03370	STOEPSEL,ABDICHTUNG	CAP,SEALING	4			0.005	
090	15521-96020	STOPFEN	PLUG	2			0.003	
100	1G777-05550	ROHRSCHALTUNG	JOINT,BREATHER	1			0.025	
110	16241-73370	ROHR	PIPE,WATER RETURN	1			0.007	
120	1J524-03450	ZYLINDERKOPFSCHRAUBE	BOLT (CYLINDER HEAD)	18			0.160	
130	1J524-03310	ZYLINDERKOPFDICHTUNG	GASKET (CYLINDER HEAD)	1			0.360	STANDARD/ 2 STUFEN
130	1J524-03600	ZYLINDERKOPFDICHTUNG	GASKET (CYLINDER HEAD)	1			0.400	VERWENDUNG / 1 KERBE
130	1J524-03610	ZYLINDERKOPFDICHTUNG	GASKET (CYLINDER HEAD)	1			0.450	VERWENDUNG / KEINE KERBE
140	3J031-16193	HALTER	BRACKET (DPF,F)	1			6.440	
150	01774-51220	SCHRAUBE	BOLT,FLANGE	3			0.030	
160	01754-50816	SCHRAUBE	BOLT,FLANGE	1			0.011	
170	05012-00810	ZYLINDERSTIFT	PIN,STRAIGHT	3			0.004	

Update Date : 2020/05/28 Print Date : 2022/04/18

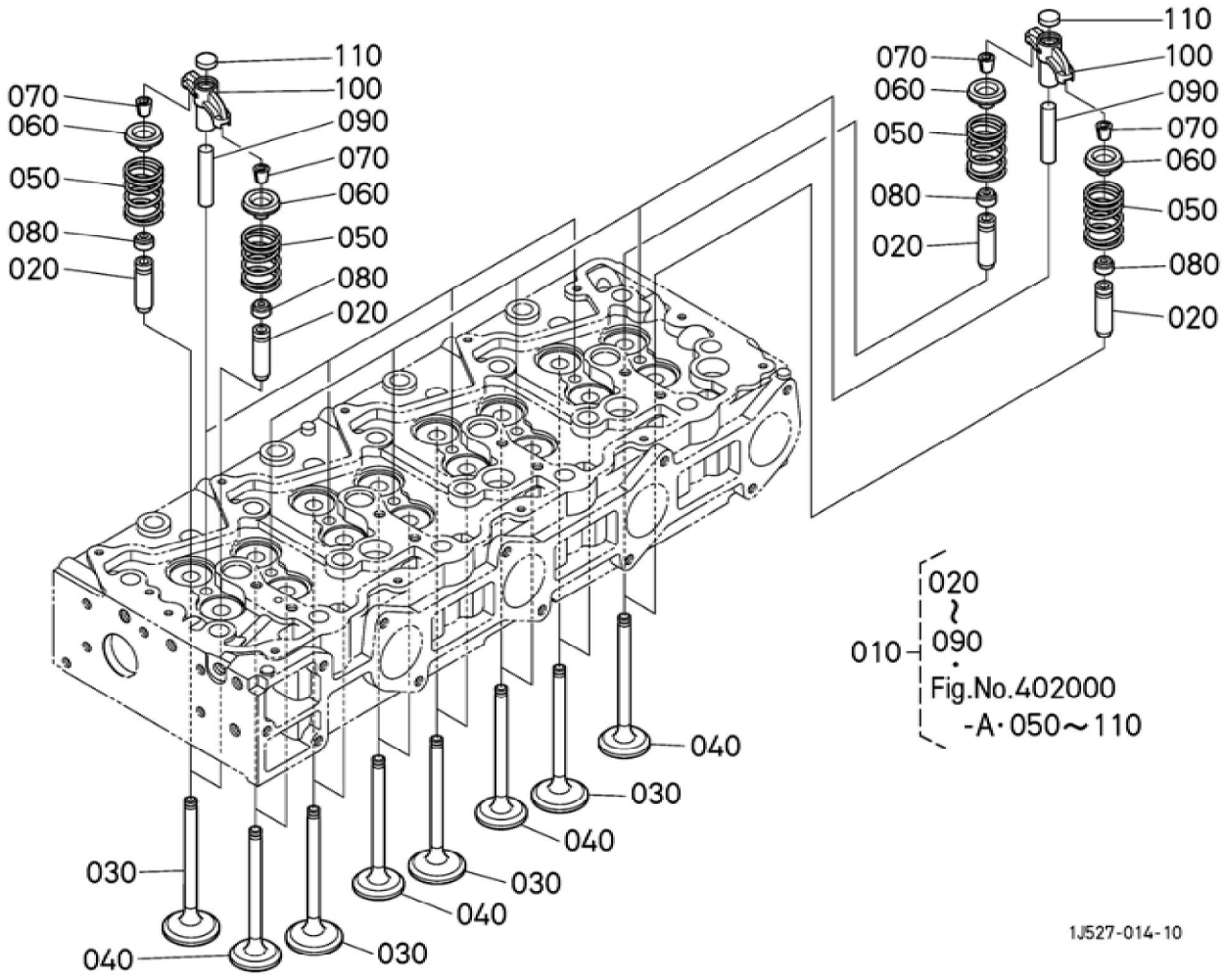

KIDK5213 >> M7172P >> MOTOR / ENGINE >> 403000 EINLASSVENTIL UND AUSLASSVENTIL / INLET VALVE AND EXHAUST VA

Update Date : 2020/05/28 Print Date : 2022/04/18

No.	Part Number	Part Name (POL)	Part Name (ENG)	QTY	IC	Serial No./PIN	Kg	Remarks
010	1J524-03020	GRP.ZYLINDERKOPF	HEAD,CYLINDER,ASSY	1			45.000	
020	1C010-13560	AUSLASSVENTILFUEHRUNG	GUIDE,EXHAUST VALVE	16		<=3KTZ999	0.025	
020	1J829-13560	VENTILFUEHRUNG	GUIDE,VALVE (EXHAUST)	16	>>	>=3KU0001	0.020	
030	1G410-13110	EINLASSVENTIL	VALVE,INLET	8			0.095	
040	1G410-13120	AUSLASSVENTIL	VALVE,EXHAUST	8			0.085	
050	15221-13240	VENTIL-FEDER	SPRING,VALVE	16			0.036	
060	15221-13330	HALTER	RETAINER,VALVE SP.	16			0.028	
070	15221-13980	KLEMMSCHEIBE	COLLET,VALVE SPRING	16			0.005	SET
080	15221-13153	VENTILDICHTUNG	SEAL(VALVE STEM)	16			0.002	
090	1C010-13482	VENTILFUEHRUNG	SHAFT,VALVE BURIGE	8			0.020	
100	1G410-13470	HUBARM, VENTIL	ARM,VALVE BRIGE	8			0.066	
110	1C010-13490	PUFFER	PAD	8			0.003	

BKIDK5213 >> M7172P >> MOTOR / ENGINE >> 404000 KIPPENARMWELLE / ROCKER ARM SHAFT

Update Date : 2020/05/28 Print Date : 2022/04/18

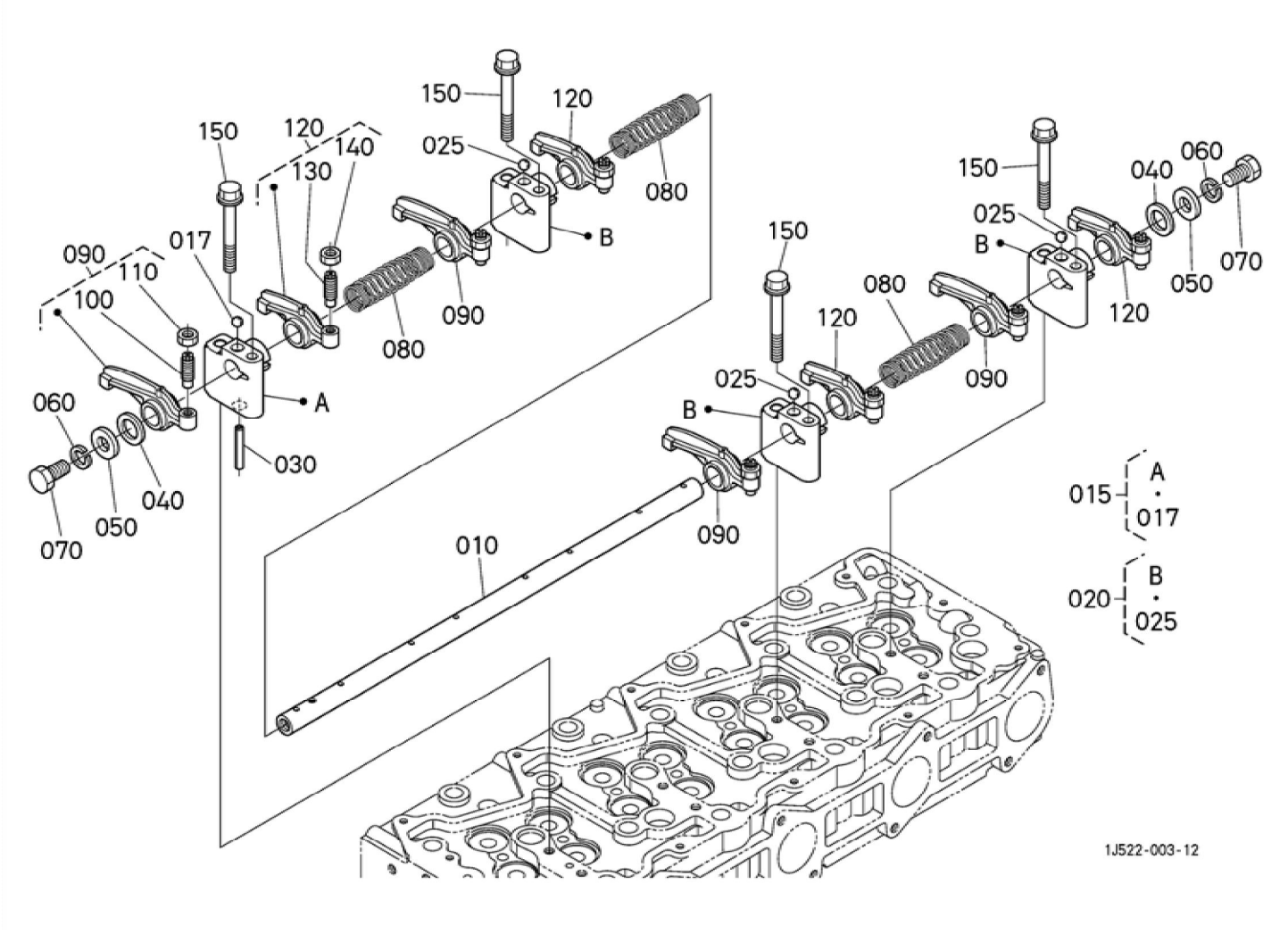

BKIDK5213 >> M7172P >> MOTOR / ENGINE >> 404000 KIPPENARMWELLE / ROCKER ARM SHAFT

Update Date : 2020/05/28 Print Date : 2022/04/18

No.	Part Number	Part Name (POL)	Part Name (ENG)	QTY	IC	Serial No./PIN	Kg	Remarks
010	1G410-14263	KIPPHEBELWELLE	SHAFT,ROCKER ARM	1			0.620	
015	1G410-14372	HALTER KOMP.	COMP BRACKET,ROCKER ARM	1			0.300	
017	07715-03213	KUGEL	BALL	1			0.004	
020	1J520-14370	HALTER KOMP.	BRACKET,COMP(ROCKER ARM)	3			0.315	
025	07715-03213	KUGEL	BALL	3			0.004	
030	05411-00640	STIFT	PIN,SPRING	1			0.006	
040	1G410-14430	SCHEIBE	WASHER	2			0.005	
050	1J520-14800	FEDERRING	WASHER,PLAIN	2			0.014	
060	04512-50120	FEDERRING	WASHER,SPRING LOCK	2			0.003	
070	01173-51220	BOLZEN	HEX.BOLT	2			0.030	
080	1G410-14310	FEDER	SPRING,ROCKER ARM	3			0.012	
090	1G410-14022	SCHWINGHEBEL	ASSY ROCKER ARM,IN.	4			0.140	
100	1G896-14230	STELLSCHRAUBE	SCREW	4			0.010	
110	15021-14240	MUTTER	NUT	4			0.003	
120	1G410-14152	SCHWINGHEBEL	ASSY ROCKER ARM,EXH.	4			0.120	
130	1G896-14230	STELLSCHRAUBE	SCREW	4			0.010	
140	15021-14240	MUTTER	NUT	4			0.003	
150	01754-50870	SCHRAUBE	BOLT,FLANGE	4		<=3JRZ999	0.028	
150	EG505-91060	SCHRAUBE	BOLT,FLANGE	4	NI	>=3JS0001	0.028	

BKIDK5213 >> M7172P >> MOTOR / ENGINE >> 405000 DECKEL OBEN / HEAD COVER

Update Date : 2020/05/28 Print Date : 2022/04/18

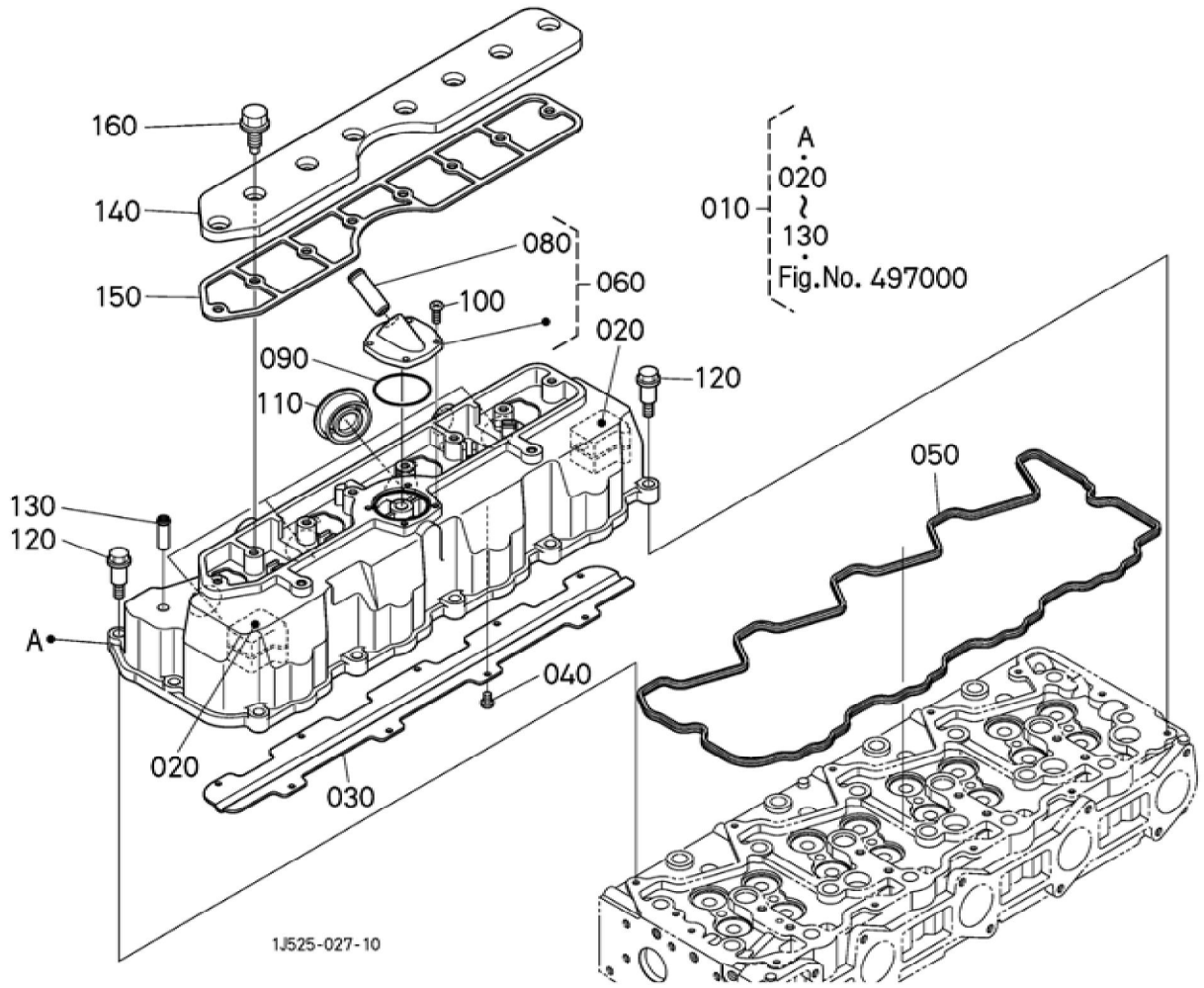

Thank you so much for reading.

Please click the “Buy Now!” button below to download the complete manual.

Buy Now

After you pay.

You can download the most perfect and complete manual in the world immediately.

Our support email:

ebooklibonline@outlook.com