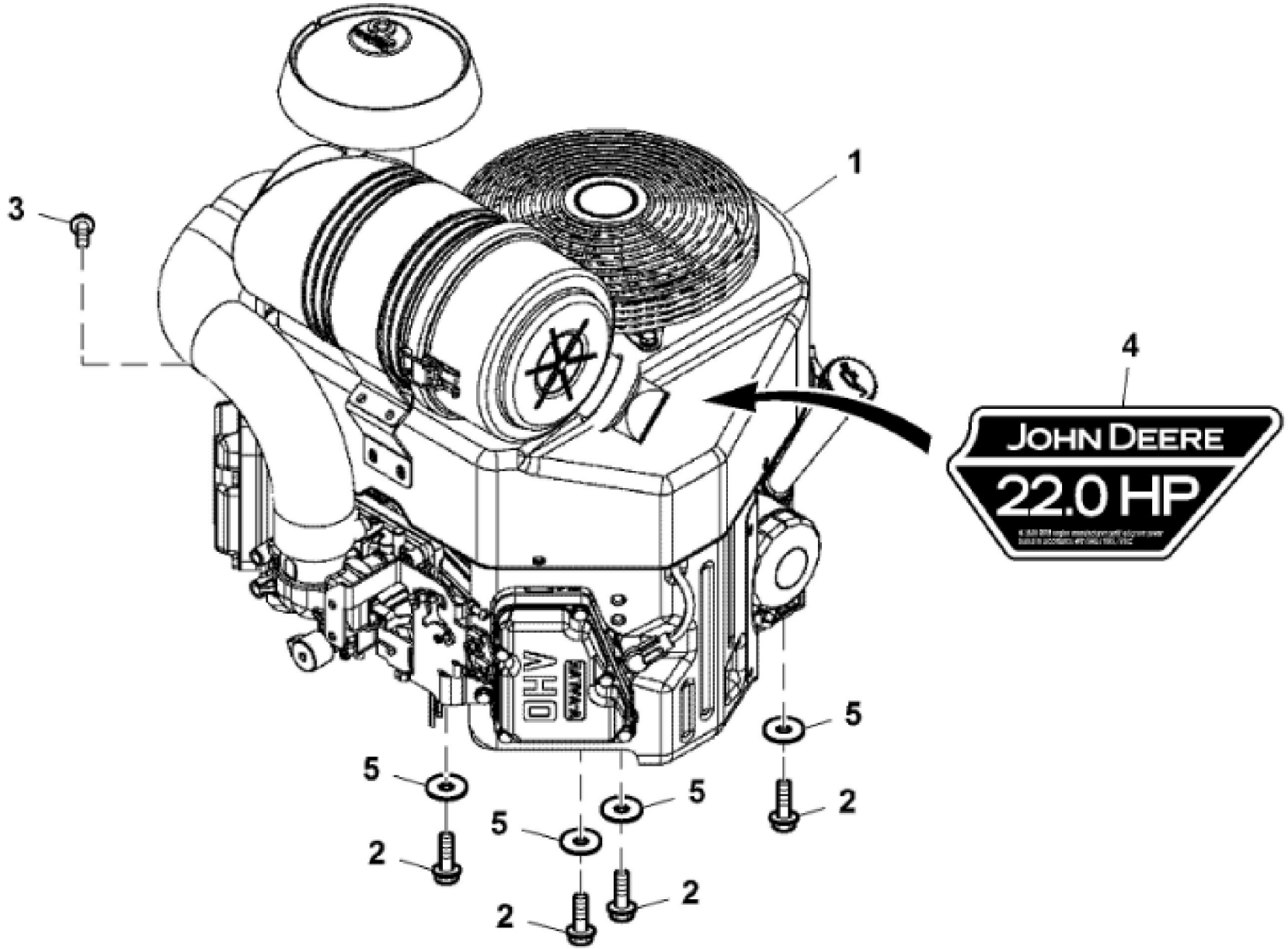
1
3
4
JOHN DEERE
22.0 HP
5
5
5
5
2
2
2
2
PU19978

John Deere > Turf And Utility >MOWER, FRONT >EX691V-DS16R - MOWER, FRONT >648R Quik-Trak Mower >20 ENGINE ETN155413 >ST808361 - ENGINE

KEY	PART NO.	PART NAME	QTY	REMARKS	
1	MIA12543	GASOLINE ENGINE	1	MARKED FX691V-DS16R; ORDER MIA12629	
1	MIA12629	GASOLINE ENGINE	1	MARKED FX691V-ES16R	
2	19H3693	SCREW	4	3/8" X 1-1/4", SUB FOR APPL TCU39256	
3	TCU24263	CAP SCREW	1		
4	TCU35711	LABEL	1		
5	24M7178	WASHER	4	10.500 X 30 X 2.500 mm	

John Deere > Turf And Utility >MOWER, FRONT >EX691V-DS16R - MOWER, FRONT >648R Quik-Trak Mower >20 ENGINE ETN155413 >ST749078 - CYLINDER HEAD AND CRANKCASE

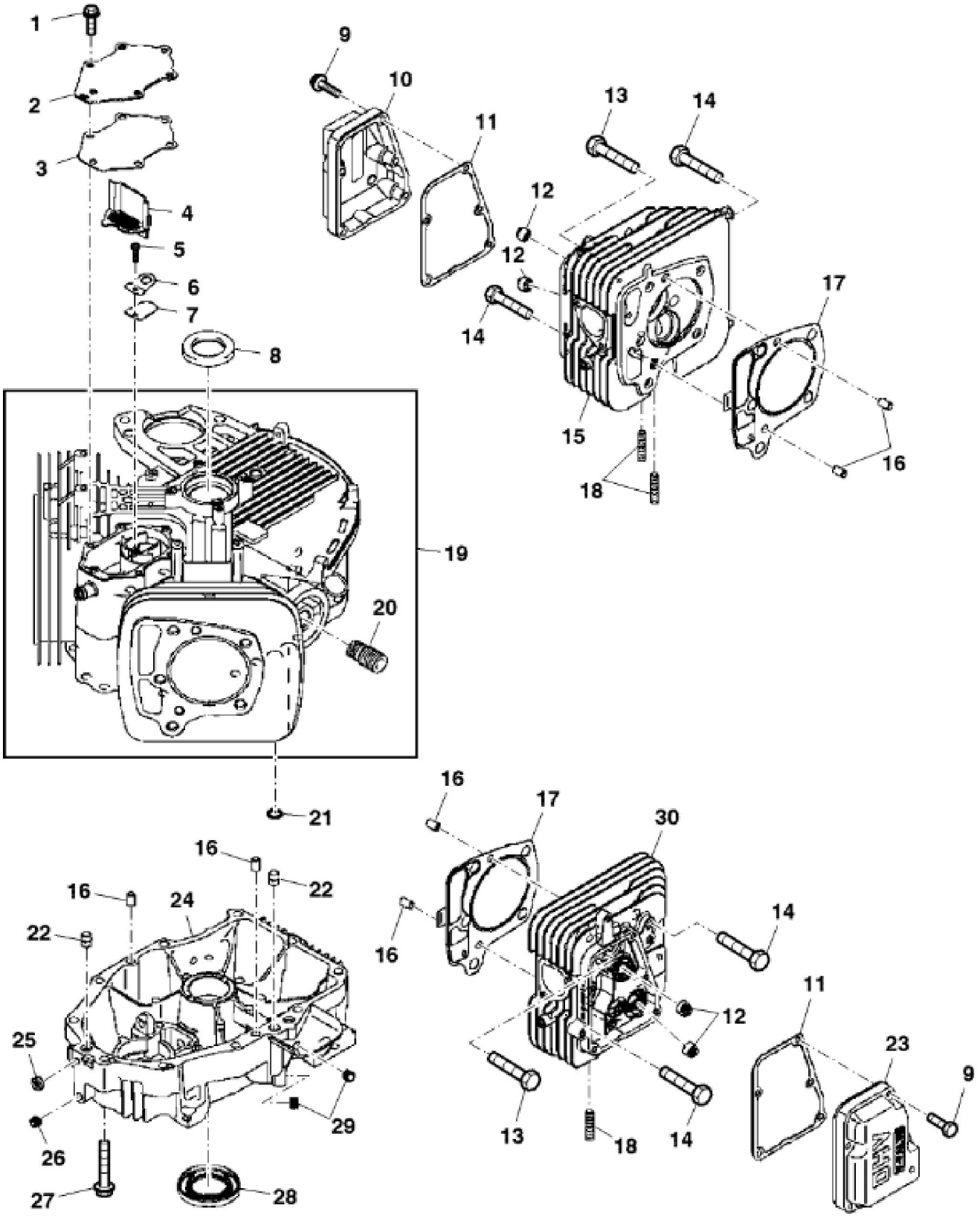

PU10238

KEY	PART NO.	PART NAME	QTY	REMARKS	
1	MIU11325	BOLT	6		
2	MIU12397	COVER	1		
3	MIU12395	GASKET	1		
4	MIU12398	PIPE	1		
5	21M7244	SCREW	1	M4 X 8	
6	MIU13821	PLATE	1		
7	MIU11769	VALVE	1		
8	M149281	SEAL	1		
9	19M7863	SCREW	10	M6 X 25	
10	MIU13778	CASE	1		
11	MIU12394	GASKET	2		
12	M138389	SEAL	4		
13	MIU12209	BOLT	6		
14	MIU11776	BOLT	4		
15	MIU12390	CYLINDER HEAD	1		
16	M74252	PIN	6		
17	MIU12396	GASKET	2		
18	MIU12726	STUD	4		
19	MIA12337	CRANKCASE	1		
20	MIU13767	ADAPTER FITTING	1		
21	M76104	O-RING	2		
22	MIU14507	PIPE	3	SUB FOR MIU11770	
23	MIU14499	COVER	1	SUB FOR MIU13779; Rocker	
24	MIU13011	COVER	1	ORDER MIA12754;	
24	MIA12754	CRANKCASE	1		
25	M151774	SEAL	1		
26	MIU12401	PLUG	1		
27	19M8319	SCREW	10	M8 X 50	
28	MIU12400	SEAL	1		
29	MIU14001	PLUG	2		
30	MIU12391	CYLINDER HEAD	1		
31	M123645	DRAIN PLUG	1	(Not Illustrated)	

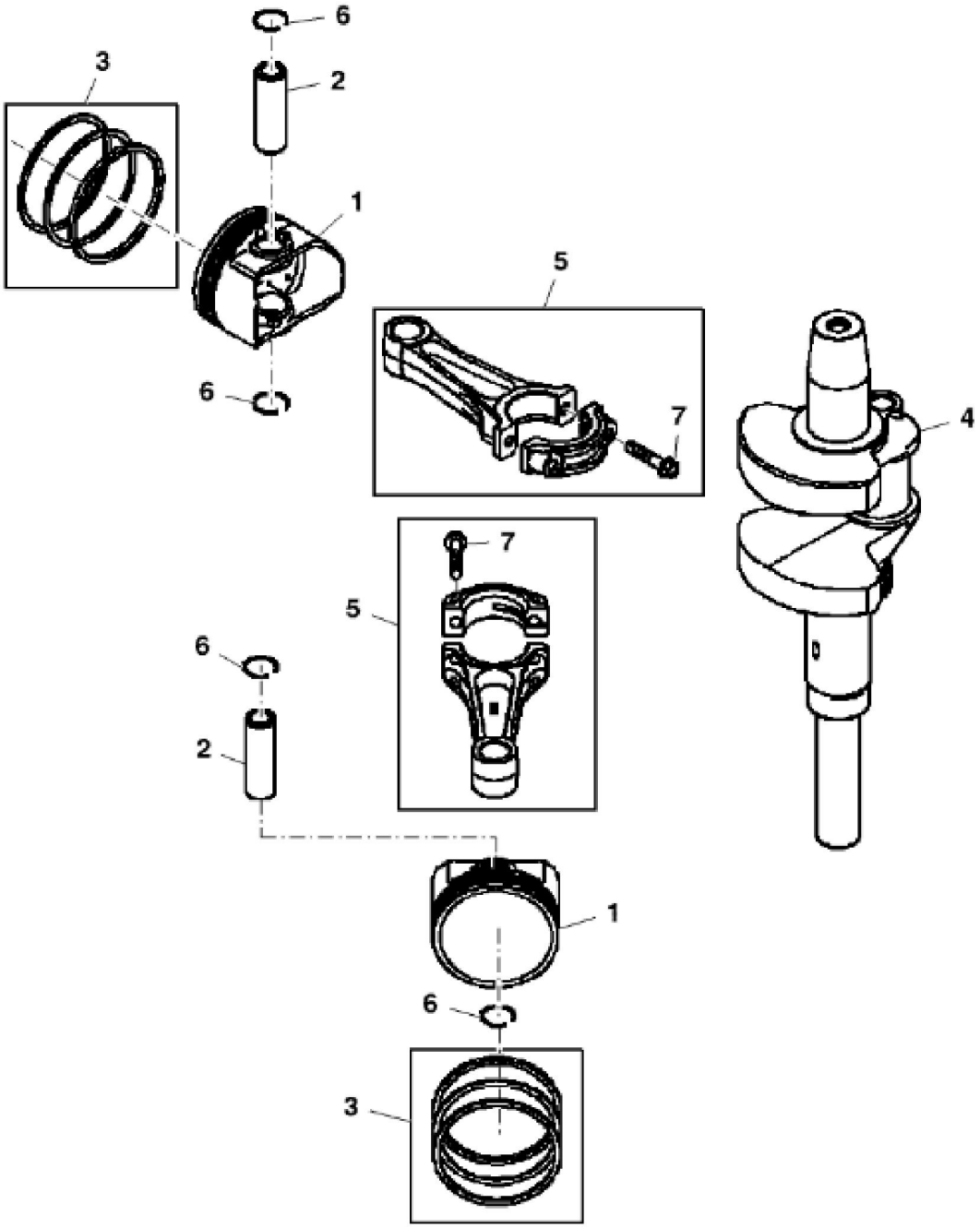

PU07370

KEY	PART NO.	PART NAME	QTY	REMARKS	
1	MIU12403	PISTON	2		
1	MIU12407	PISTON	1		
2	MIU13270	PISTON PIN	2		
3	MIU12405	PISTON RING KIT	2		
3	MIU12406	PISTON RING KIT	1		
4	MIU12492	CRANKSHAFT	1		
5	MIA11615	CONNECTING ROD	2		
6	MIU12408	SNAP RING	4		
7	M146763	BOLT	4		

John Deere > Turf And Utility >MOWER, FRONT >EX691V-DS16R - MOWER, FRONT >648R Quik-Trak Mower >20 ENGINE ETN155413 >ST749086 - VALVE AND CAMSHAFT

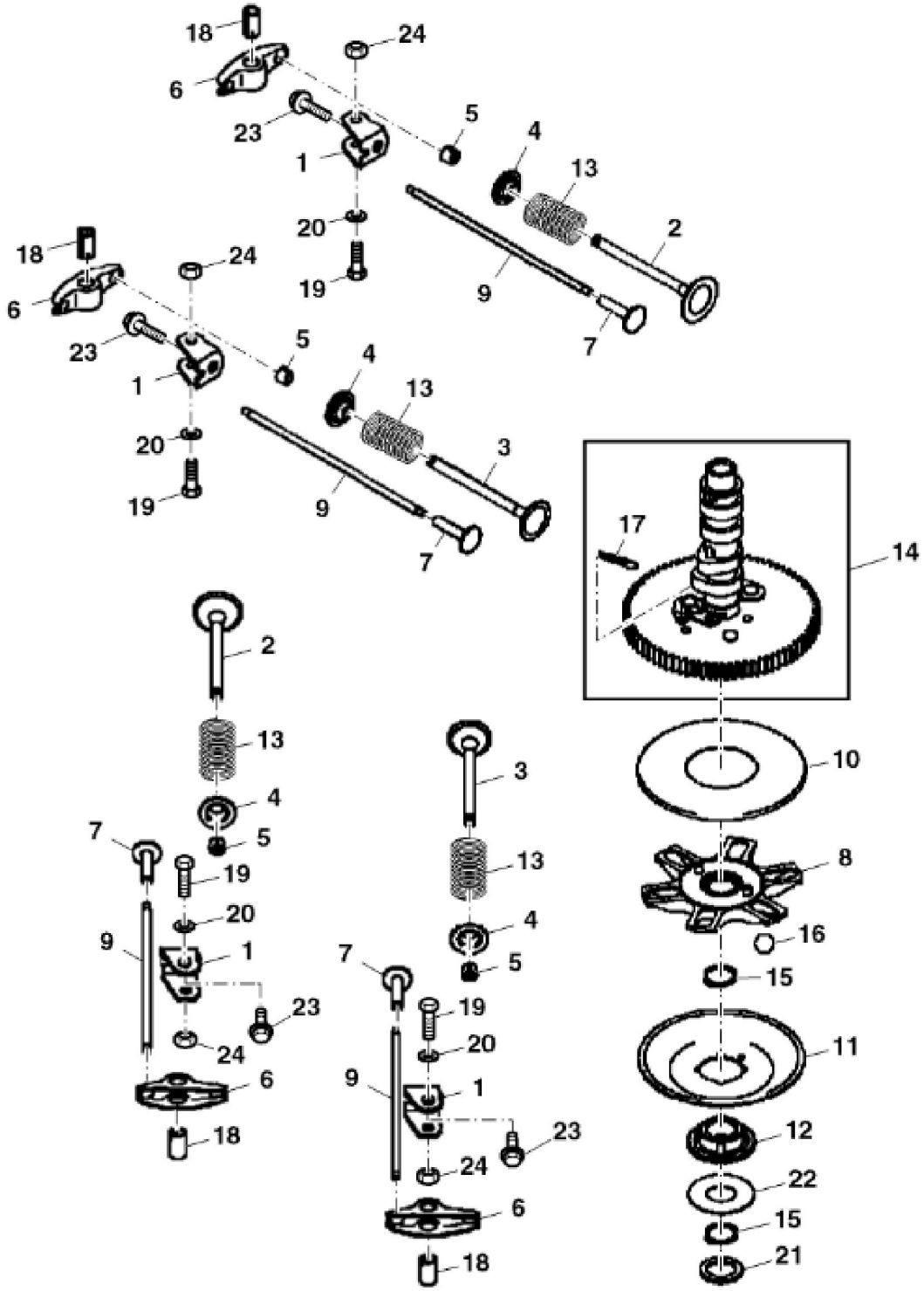

PU07372

Thank you so much for reading.

Please click the “Buy Now!” button below to download the complete manual.

Buy Now

After you pay.

You can download the most perfect and complete manual in the world immediately.

Our support email:

ebooklibonline@outlook.com