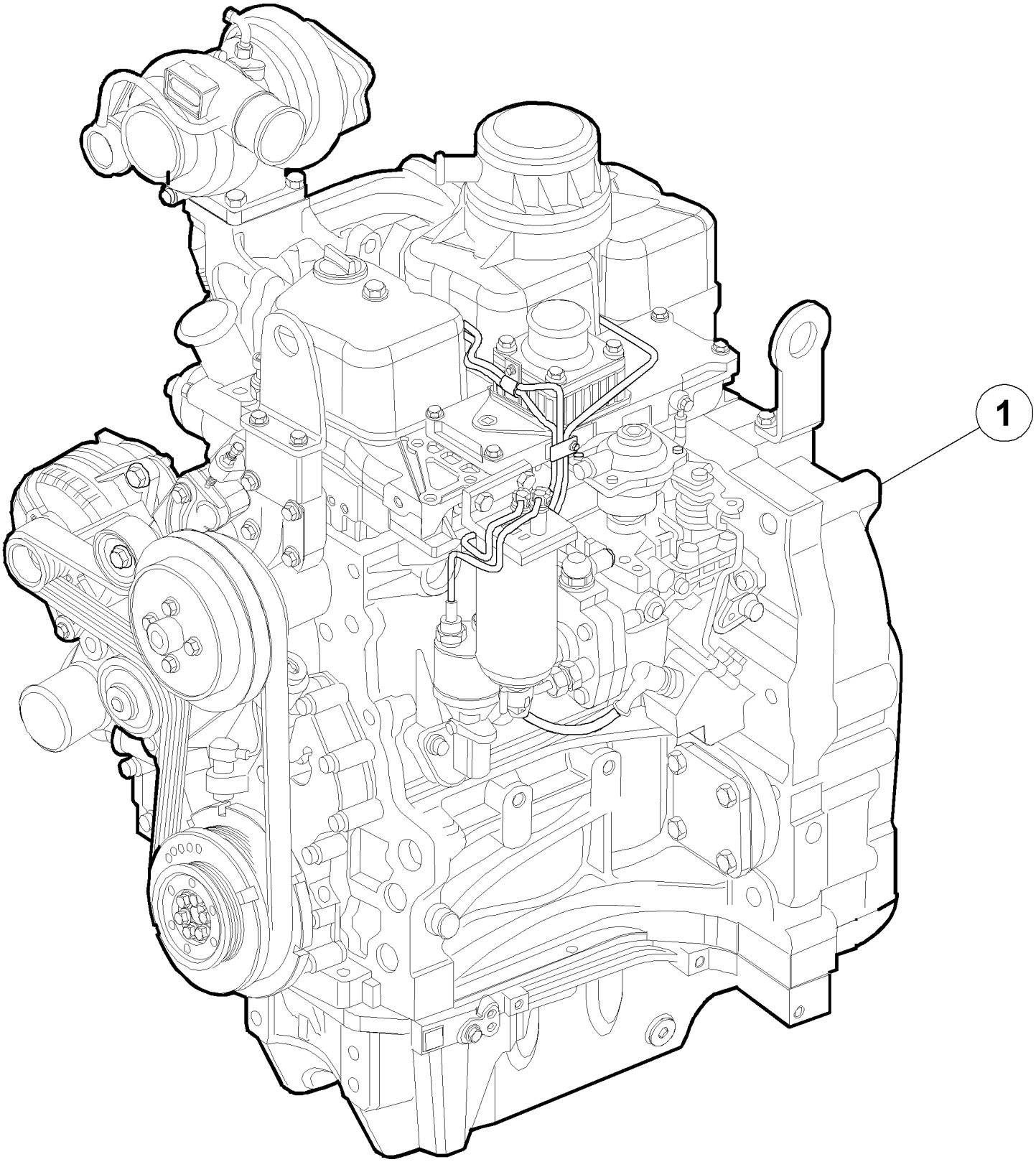
1

010 COMPLETE ENGINE

Pos.	Part No.	Description	Dimension	Quantity	Conditions
1	**60 0503 096 0**	ENGINE		1	1)
1	**60 0503 096 0**	ENGINE		1	2)
1	**60 0503 096 1**	ENGINE		1	3)
1	**60 0503 096 1**	ENGINE		1	4)
1	**60 0503 096 3**	ENGINE		1	5)
1	**60 0503 096 3**	ENGINE		1	6)
1	**60 0503 096 4**	ENGINE		1	7)
1	**60 0503 096 4**	ENGINE		1	8)
1	**60 0503 096 5**	ENGINE		1	9)

1)	**Homologationtype**	+ 9611 ATMO 3 CYL 56CH
2)	**Homologationtype**	+ 9612 ATMO 3 CYL 56CH
3)	**Homologationtype**	+ 9621 TURBO 3CYL 68CH
4)	**Homologationtype**	+ 9622 TURBO 3CYL 68CH
5)	**Homologationtype**	+ 9631 TURBO 3CYL 79CH
6)	**Homologationtype**	+ 9632 TURBO 3CYL 79CH
7)	**Homologationtype**	+ 9681 TURBO 4CYL 90CH
8)	**Homologationtype**	+ 9682 TURBO 4CYL 90CH
9)	**Homologationtype**	+ 9692 TURBO 4CYL101CH

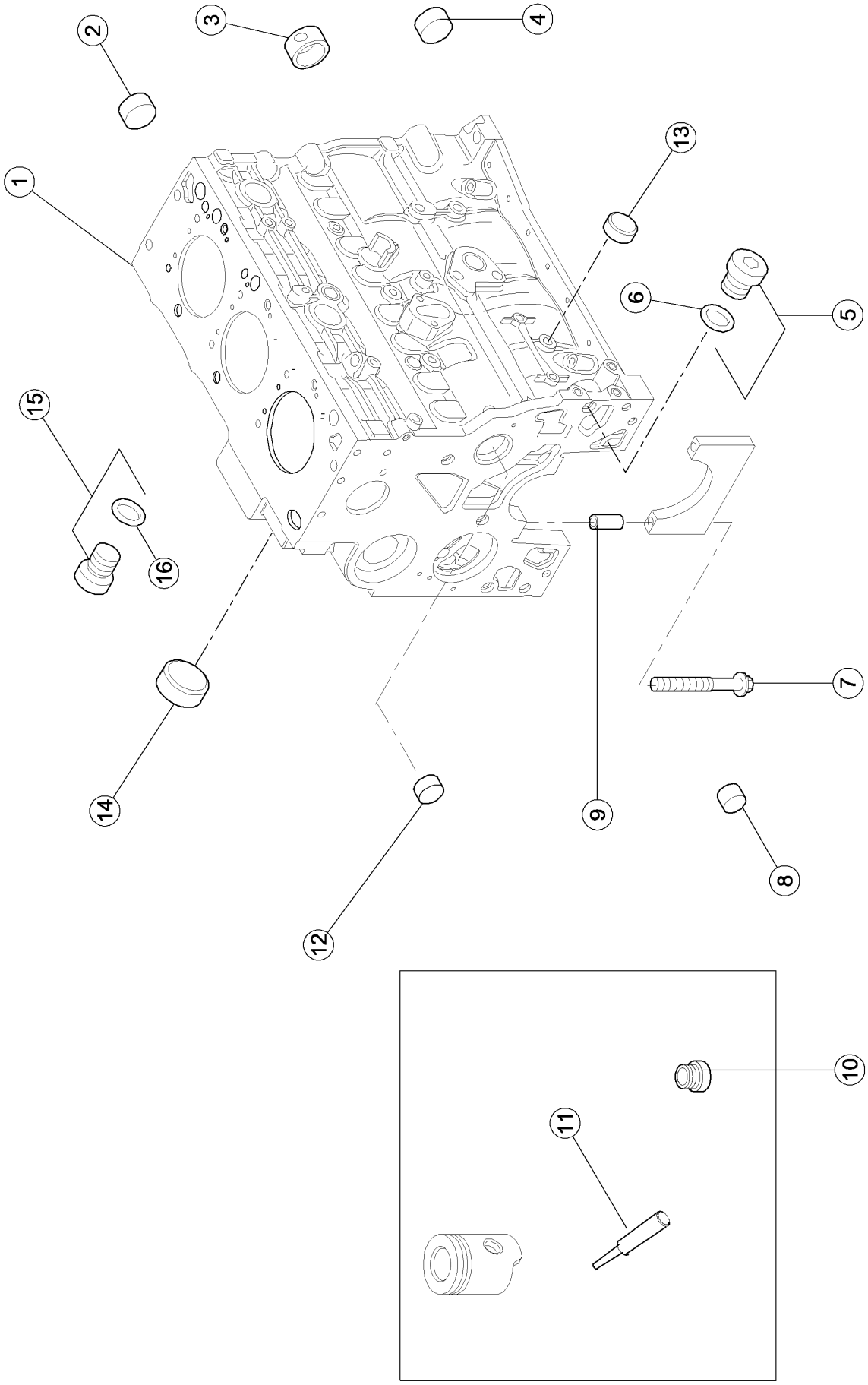
1
2
3
4
5
6
7
8
9
10
11
12
13
14
15
16

100 CRANKCASE 1)

Pos.	Part No.	Description	Dimension	Quantity	Conditions
1	**60 0503 097 9**	CRANKCASE		1	
2	**60 0503 098 0**	PLUG		3	
3	**60 0503 098 1**	BUSHING		1	2)
4	**60 0503 098 2**	PLUG		2	
5	**60 0503 098 3**	PLUG		1	3)
6	**60 0503 098 4**	O-RING		1	
7	**60 0503 098 5**	SCREW		8	4)
8	**60 0503 098 6**	CENTRING PIN		8	
9	**60 0503 098 7**	CENTRING PIN		2	
10	**60 0503 098 8**	NOZZLE		1	5)
11	**60 0503 098 9**	NOZZLE		3	5)
12	**60 0503 099 0**	PLUG		2	
13	**60 0503 099 1**	PLUG		1	
14	**60 0503 099 2**	BLANKING COVER		6	
15	**60 0503 099 3**	PLUG		1	6)
16	**60 0503 099 4**	O-RING		1	

1)	**Homologationtype**	+ 9611 + 9612
2)	**Remarks**	->ARBRE A CAME
3)	**Remarks**	M10X1.50
4)	**Remarks**	M12X120mm
5)	**Remarks**	-->HUILE
6)	**Remarks**	M18X1,50

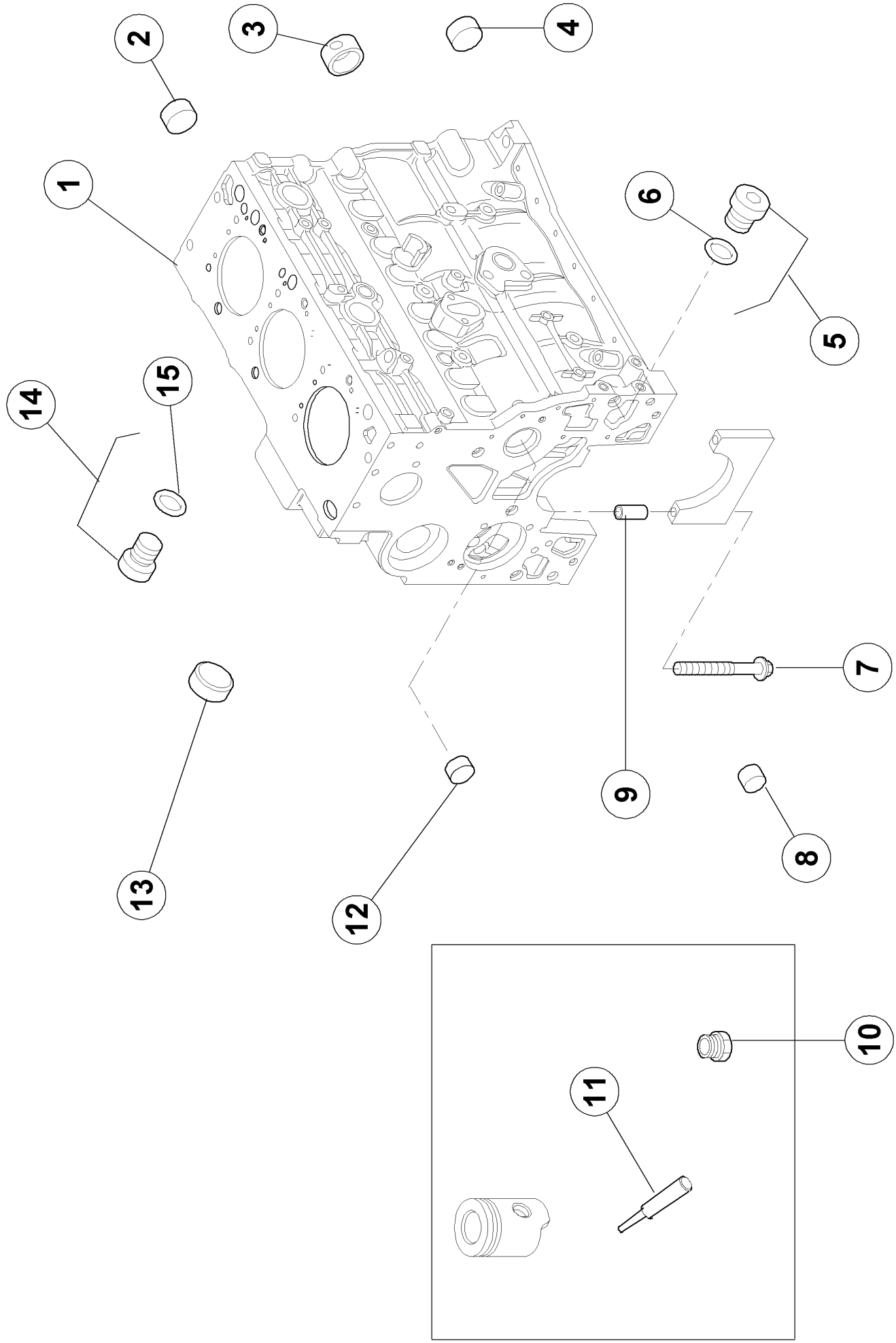
1
2
3
4
5
6
7
8
9
10
11
12
13
14
15

100 CRANKCASE 1)

Pos.	Part No.	Description	Dimension	Quantity	Conditions
1	**60 0503 097 9**	CRANKCASE		1	
2	**60 0503 098 0**	PLUG		3	
3	**60 0503 098 1**	BUSHING		1	2)
4	**60 0503 098 2**	PLUG		2	
5	**60 0503 098 3**	PLUG		1	3)
6	**60 0503 098 4**	O-RING		1	
7	**60 0503 098 5**	SCREW		8	4)
8	**60 0503 098 6**	CENTRING PIN		8	
9	**60 0503 098 7**	CENTRING PIN		2	
10	**60 0503 098 8**	NOZZLE		1	5)
11	**60 0503 098 9**	NOZZLE		3	5)
12	**60 0503 099 0**	PLUG		2	
13	**60 0503 099 2**	BLANKING COVER		6	
14	**60 0503 099 3**	PLUG		1	6)
15	**60 0503 099 4**	O-RING		1	

1)	**Homologationtype**	+ 9621 + 9622
2)	**Remarks**	->ARBRE A CAMES
3)	**Remarks**	M10X1,50
4)	**Remarks**	M12X120mm
5)	**Remarks**	HUILE
6)	**Remarks**	M 18 X 1,50

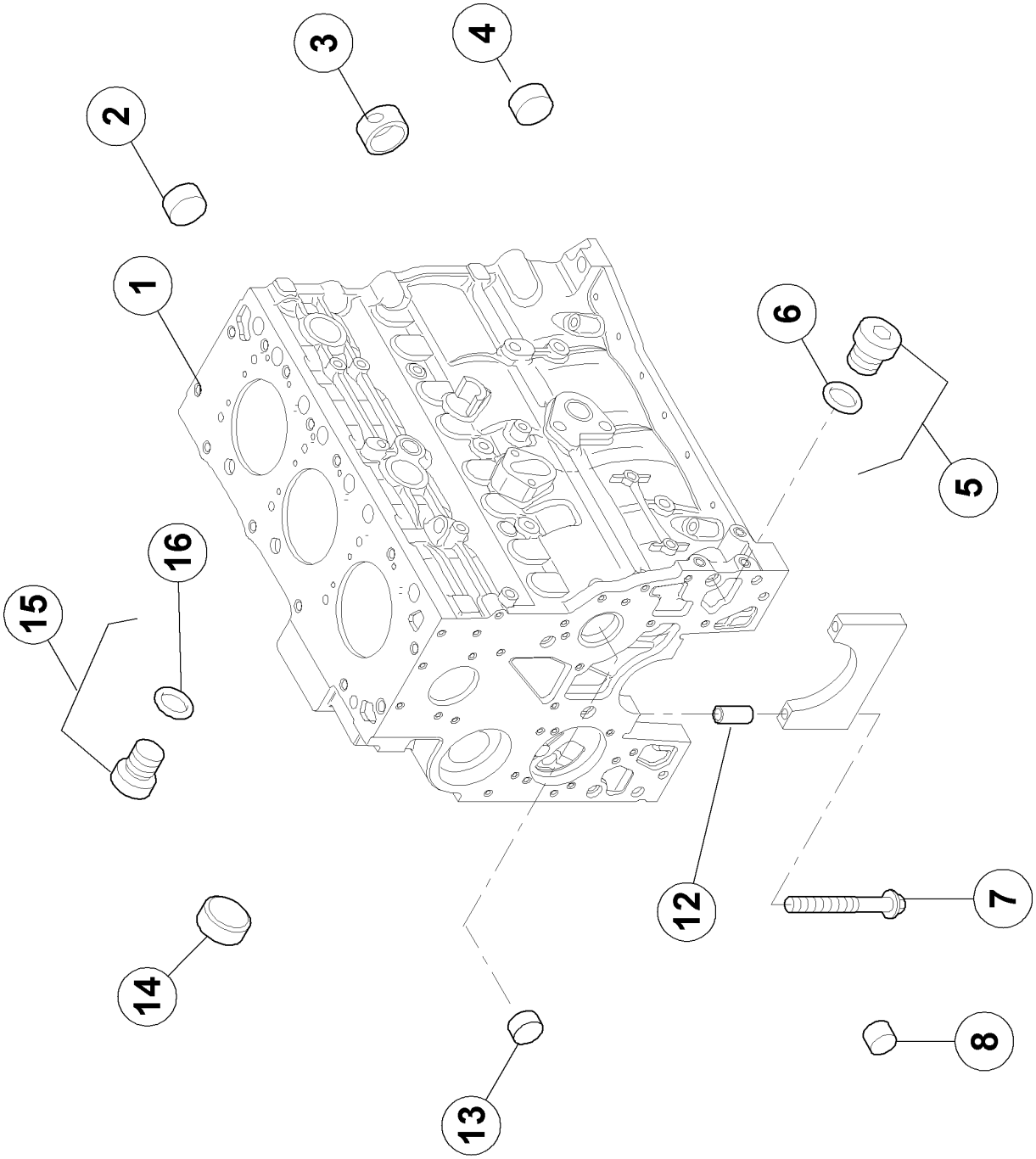
1
2
3
4
5
6
7
8
12
13
14
15
16

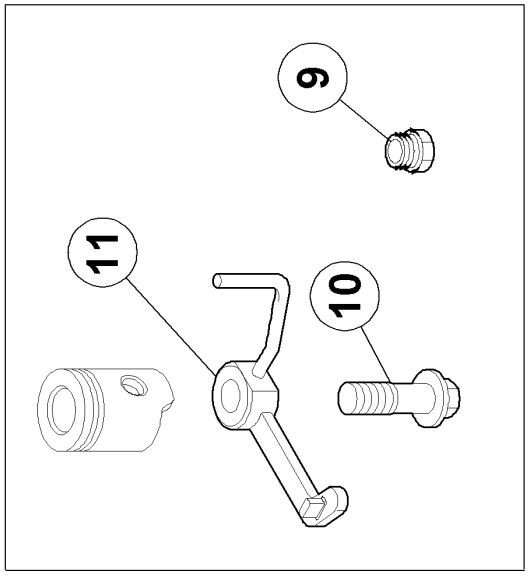
9
10
11

100 CRANKCASE 1)

Pos.	Part No.	Description	Dimension	Quantity	Conditions
1	**60 0503 099 5**	CRANKCASE		1	
2	**60 0503 098 0**	PLUG		3	
3	**60 0503 098 1**	BUSHING		1	2)
4	**60 0503 098 2**	PLUG		2	
5	**60 0503 098 3**	PLUG		1	3)
6	**60 0503 098 4**	O-RING		1	
7	**60 0503 098 5**	SCREW		8	4)
8	**60 0503 098 6**	CENTRING PIN		8	
9	**60 0503 098 8**	NOZZLE		1	5)
10	**60 0503 099 7**	SCREW		3	
11	**60 0503 099 8**	NOZZLE		3	5)
12	**60 0503 098 7**	CENTRING PIN		2	
13	**60 0503 099 0**	PLUG		2	
14	**60 0503 099 2**	BLANKING COVER		6	
15	**60 0503 099 3**	PLUG		1	6)
16	**60 0503 099 4**	O-RING		1	

1)	**Homologationtype**	+ 9631 + 9632
2)	**Remarks**	->ARBRE A CAMES
3)	**Remarks**	M 10 X 1,50
4)	**Remarks**	M 12 X 120mm
5)	**Remarks**	->HUILE
6)	**Remarks**	M 18 X 1,50

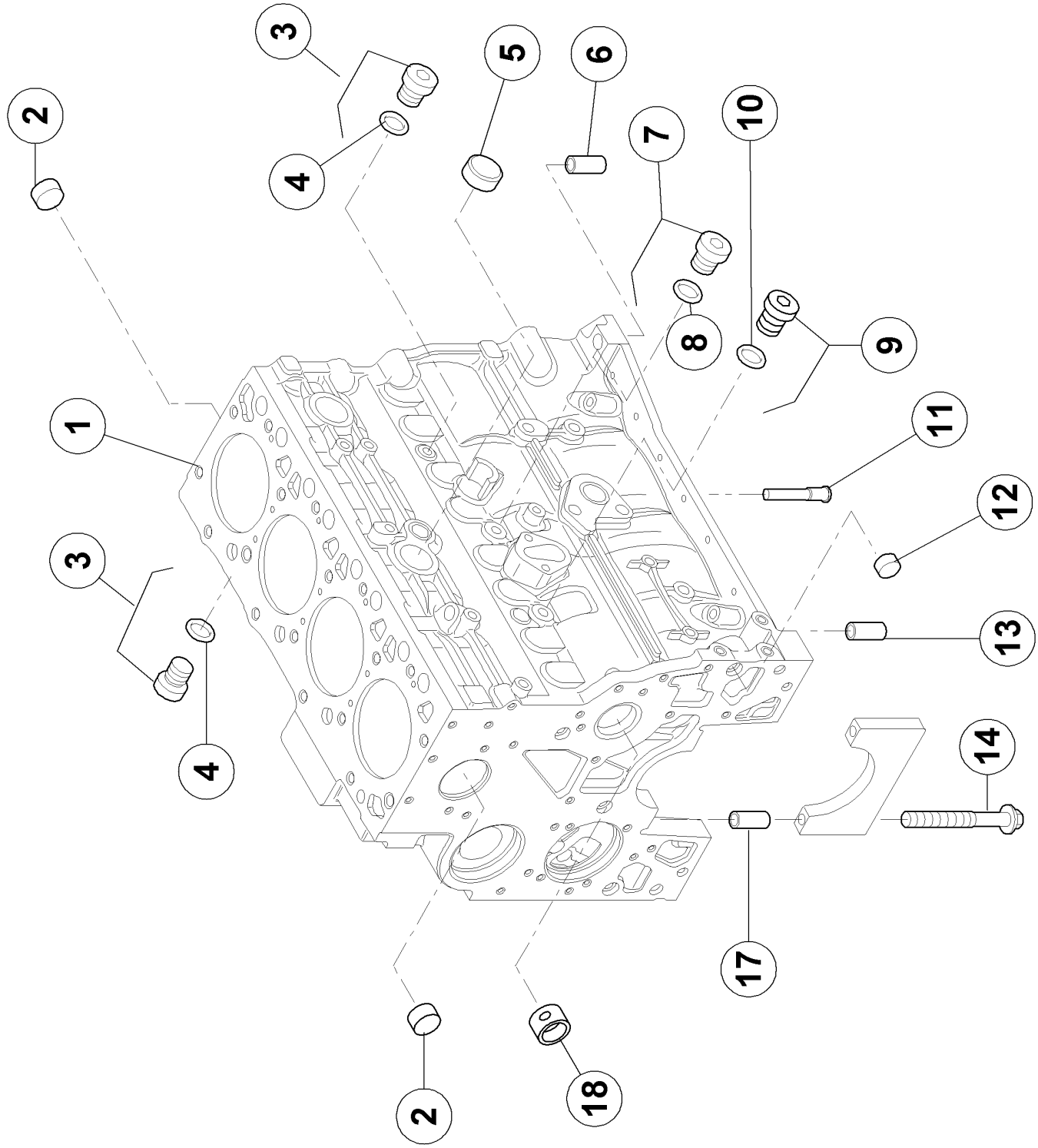
1
2
3
4
5
6
7
8
9
10
11
12
13
14
17
18

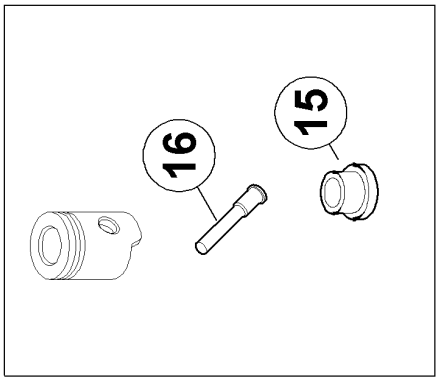
15
16

100 CRANKCASE 1)

Pos.	Part No.	Description	Dimension	Quantity	Conditions
1	**00 1131 978 0**	CRANKCASE		1	
2	**60 0503 098 0**	PLUG		4	
3	**60 0503 099 3**	PLUG		2	2)
4	**60 0503 099 4**	O-RING		2	
5	**60 0503 098 2**	PLUG		2	
6	**60 0503 098 7**	CENTRING PIN		2	
7	**60 0503 100 0**	PLUG		1	3)
8	**60 0503 100 1**	O-RING		1	
9	**60 0503 098 3**	PLUG		2	4)
10	**60 0503 098 4**	O-RING		2	
11	**60 0503 100 2**	LOCK		1	
16	**60 0503 098 9**	NOZZLE		4	5)
17	**60 0503 098 6**	CENTRING PIN		10	
18	**60 0503 098 1**	BUSHING		1	6)

1)	**Homologationtype**	+ 9681 + 9682
2)	**Remarks**	M18 X 1,50
3)	**Remarks**	M14 x 1,50
4)	**Remarks**	M10 X 1,50
5)	**Remarks**	-> HUILE
6)	**Remarks**	->ARBRE A CAMES

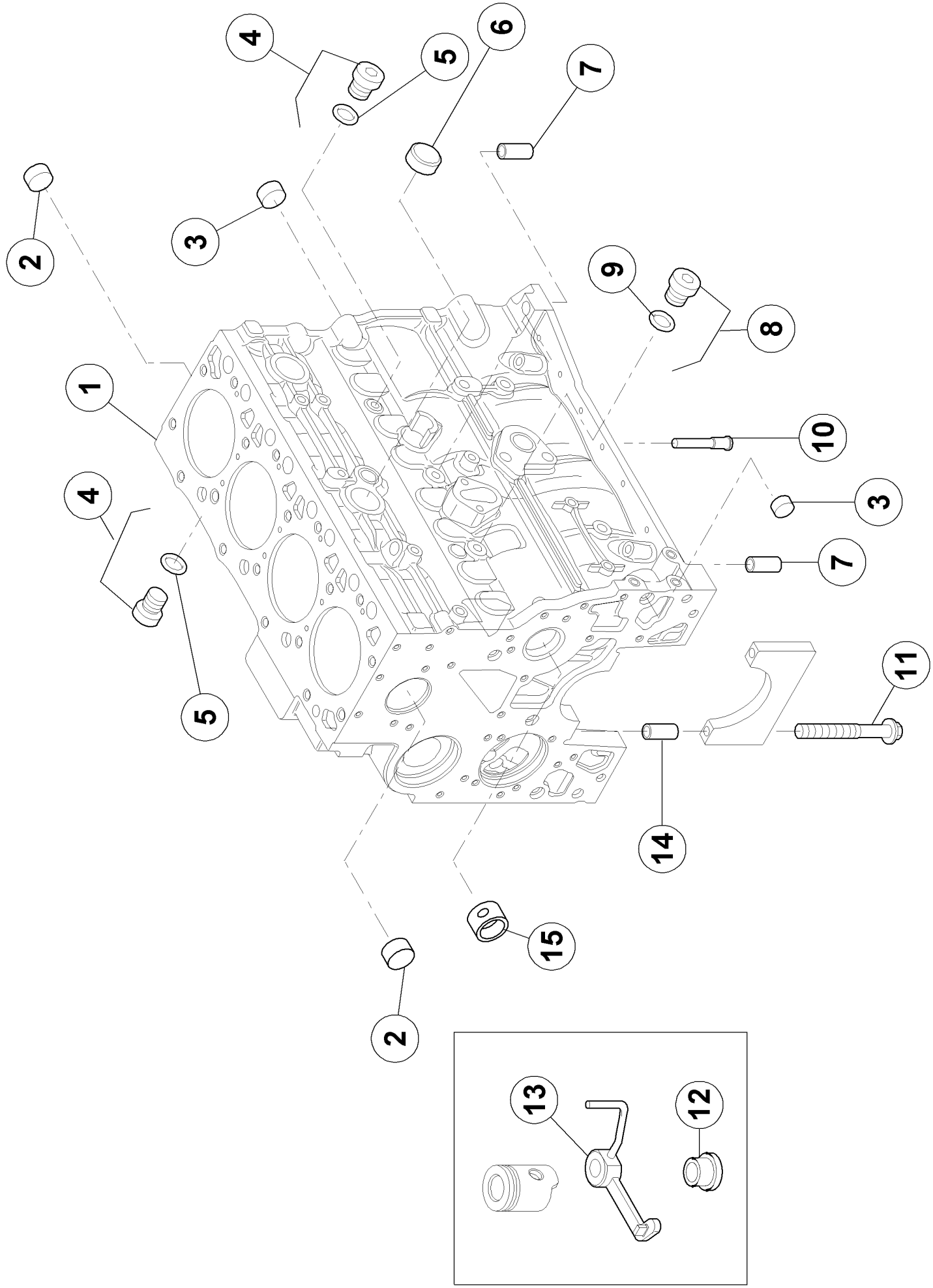
1
2
3
4
5
6
7
8
9
10
11
12
13
14
15

100 CRANKCASE 1)

Pos.	Part No.	Description	Dimension	Quantity	Conditions
1	**60 0503 100 3**	CRANKCASE		1	
2	**60 0503 098 0**	PLUG		4	
3	**60 0503 099 0**	PLUG		2	
4	**60 0503 099 3**	PLUG		2	2)
5	**60 0503 099 4**	O-RING		2	
6	**60 0503 098 2**	PLUG		2	
7	**60 0503 098 7**	CENTRING PIN		2	
8	**60 0503 098 3**	PLUG		2	3)
9	**60 0503 098 4**	O-RING		2	
10	**60 0503 100 2**	LOCK		1	
11	**60 0503 098 5**	SCREW		10	4)
12	**60 0503 098 8**	NOZZLE		1	5)
13	**60 0503 099 8**	NOZZLE		4	5)
14	**60 0503 098 6**	CENTRING PIN		10	
15	**60 0503 098 1**	BUSHING		1	6)

1)	**Homologationtype**	+ 9692
2)	**Remarks**	M 18 X 1,50
3)	**Remarks**	M 10 X 1,50
4)	**Remarks**	M 12 X 120mm
5)	**Remarks**	-> HUILE
6)	**Remarks**	->ARBRE A CAMES

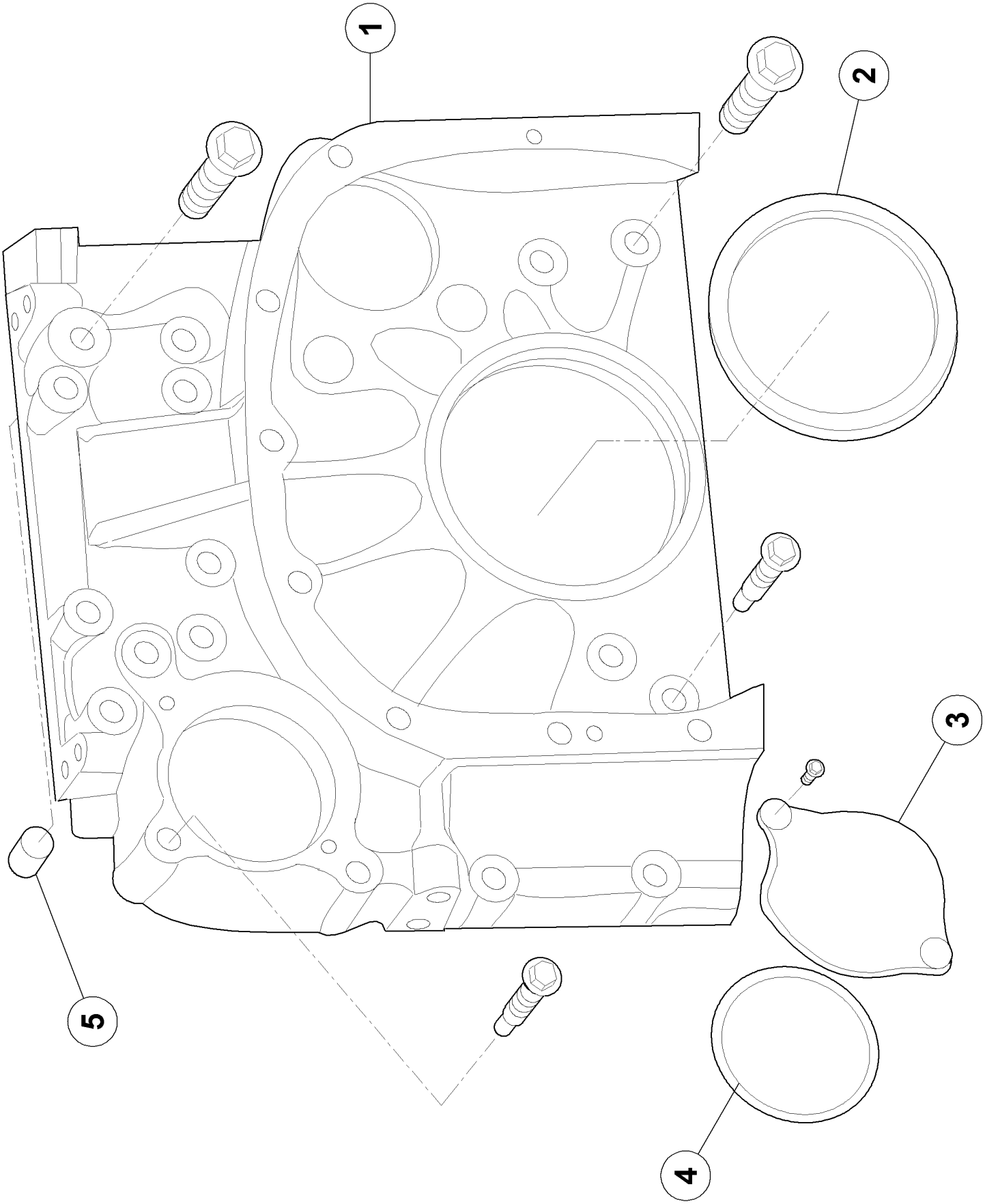
1
2
3
4
5

120 TIMING CASE

Pos.	Part No.	Description	Dimension	Quantity	Conditions
1	**60 0503 100 4**	HOUSING		1	
2	**60 0503 100 5**	SEALING RING		1	
3	**60 0503 100 6**	COVER		1	
4	**60 0503 100 7**	O-RING		1	
5	**60 0503 100 8**	CENTRING PIN		2	

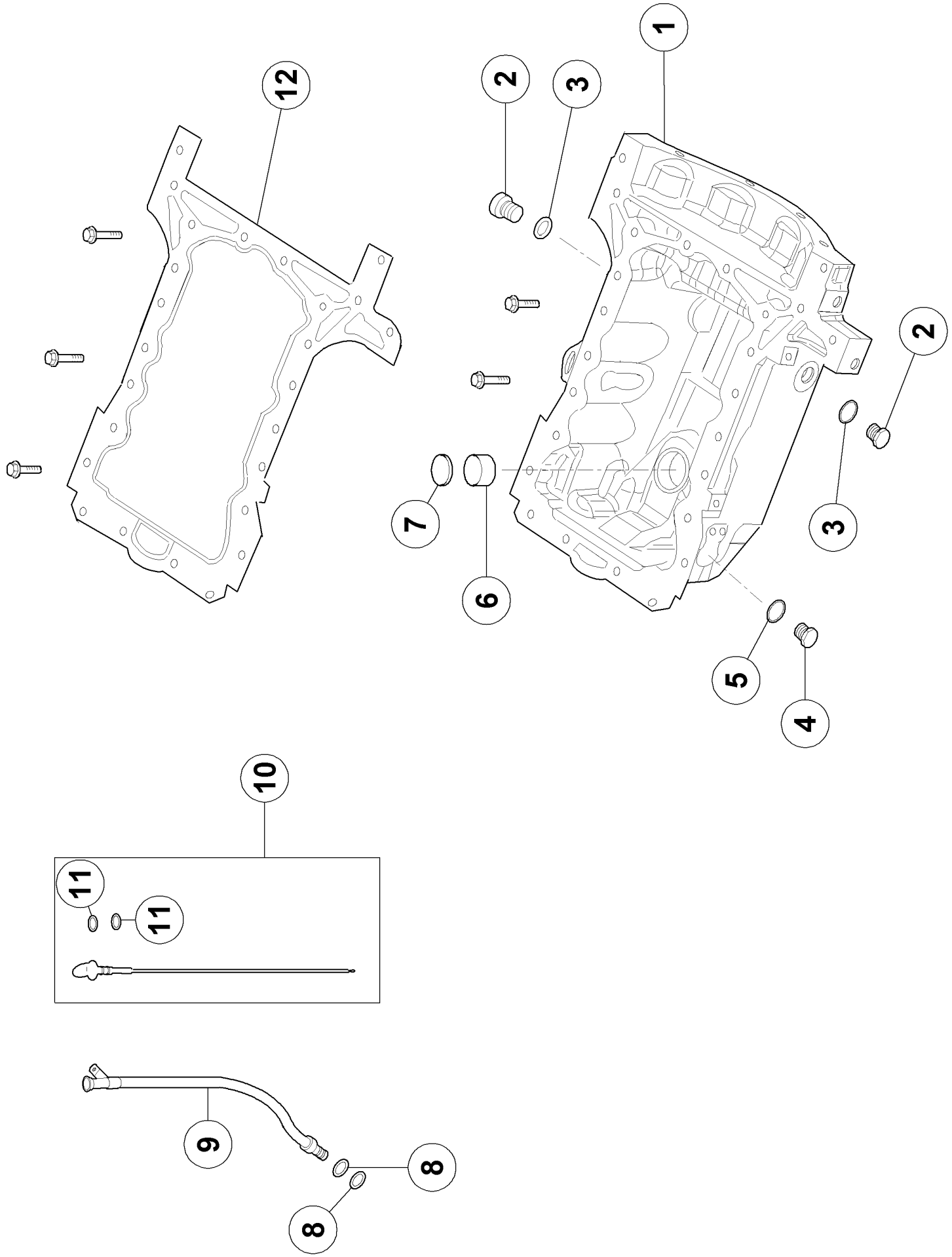
1
2
3
2
3
4
5
6
7
8
8
9
10
11
11
12

160 OIL PAN 1)

Pos.	Part No.	Description	Dimension	Quantity	Conditions
1	**60 0503 100 9**	OIL SUMP		1	2)
2	**60 0503 101 0**	SCREW PLUG		2	3)
3	**60 0503 101 1**	O-RING		2	
4	**60 0503 101 2**	LOCK		1	
5	**00 1151 669 0**	GASKET		1	4)
6	**60 0503 101 4**	ENGINE OIL FILTER		1	
7	**60 0503 101 5**	LOCK		1	
8	**77 0102 690 5**	O-RING	23,47X2,62 NBR 80 SH	2	5)
9	**60 0503 101 6**	TUBE		1	
10	**60 0503 101 7**	GAUGE		1	
11	**60 0503 101 8**	O-RING		2	6)
12	**60 0503 101 9**	GASKET		1	

1)	**Homologationtype**	+ 9611 + 9612 + 9621 + 9622 + 9631 + 9632
2)	**Remarks**	-> 3 CYLINDRES
3)	**Remarks**	M 22 X 1,50
4)	**Remarks**	ø16x24-1,5
5)	**Remarks**	ø 23,4 X 2,6
6)	**Remarks**	ø 21,95 x 1,78

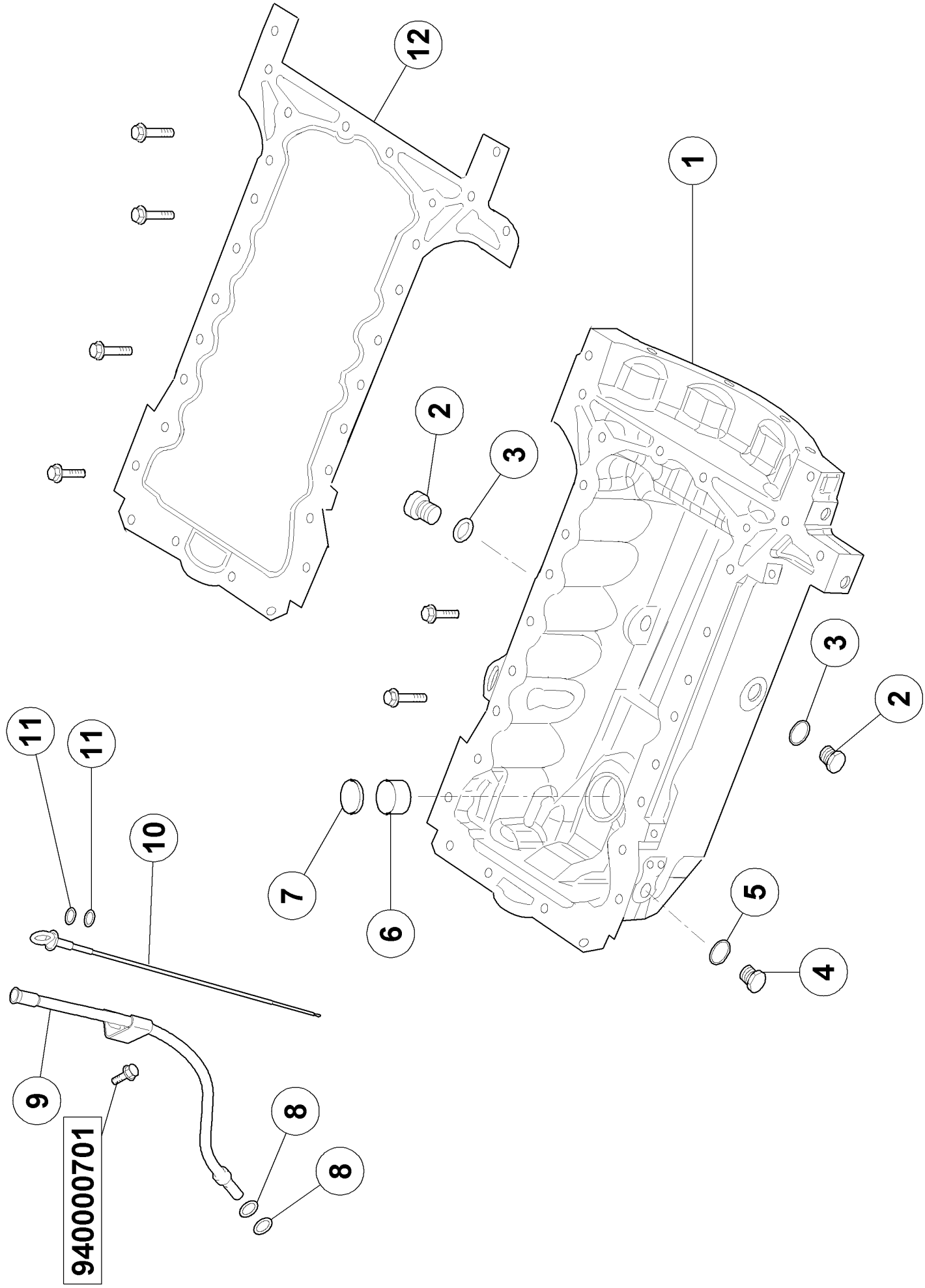
12
1
2
3
3
2
11
11
10
7
6
5
4
9
8
8
940000701

160 OIL PAN 1)

Pos.	Part No.	Description	Dimension	Quantity	Conditions
1	**60 0503 102 0**	OIL SUMP		1	2)
2	**60 0503 101 0**	SCREW PLUG		2	3)
3	**60 0503 101 1**	O-RING		2	
4	**60 0503 101 2**	LOCK		1	4)
5	**00 1151 669 0**	GASKET		1	5)
6	**60 0503 101 4**	ENGINE OIL FILTER		1	
7	**60 0503 101 5**	LOCK		1	
8	**60 0503 101 8**	O-RING		2	6)
9	**60 0503 101 6**	TUBE		1	
10	**60 0503 102 1**	GAUGE		1	
11	**77 0102 690 5**	O-RING	23,47X2,62 NBR 80 SH	2	7)
12	**60 0503 102 2**	GASKET		1	

1)	**Homologationtype**	+ 9681 + 9682 + 9692
2)	**Remarks**	-> 4 CYLINDRES
3)	**Remarks**	M 22 X 1,50
4)	**Remarks**	M 16 X 1,50
5)	**Remarks**	ø 16x24x1,50
6)	**Remarks**	ø 21,95x1,78
7)	**Remarks**	ø 23,4 X 2,6mm

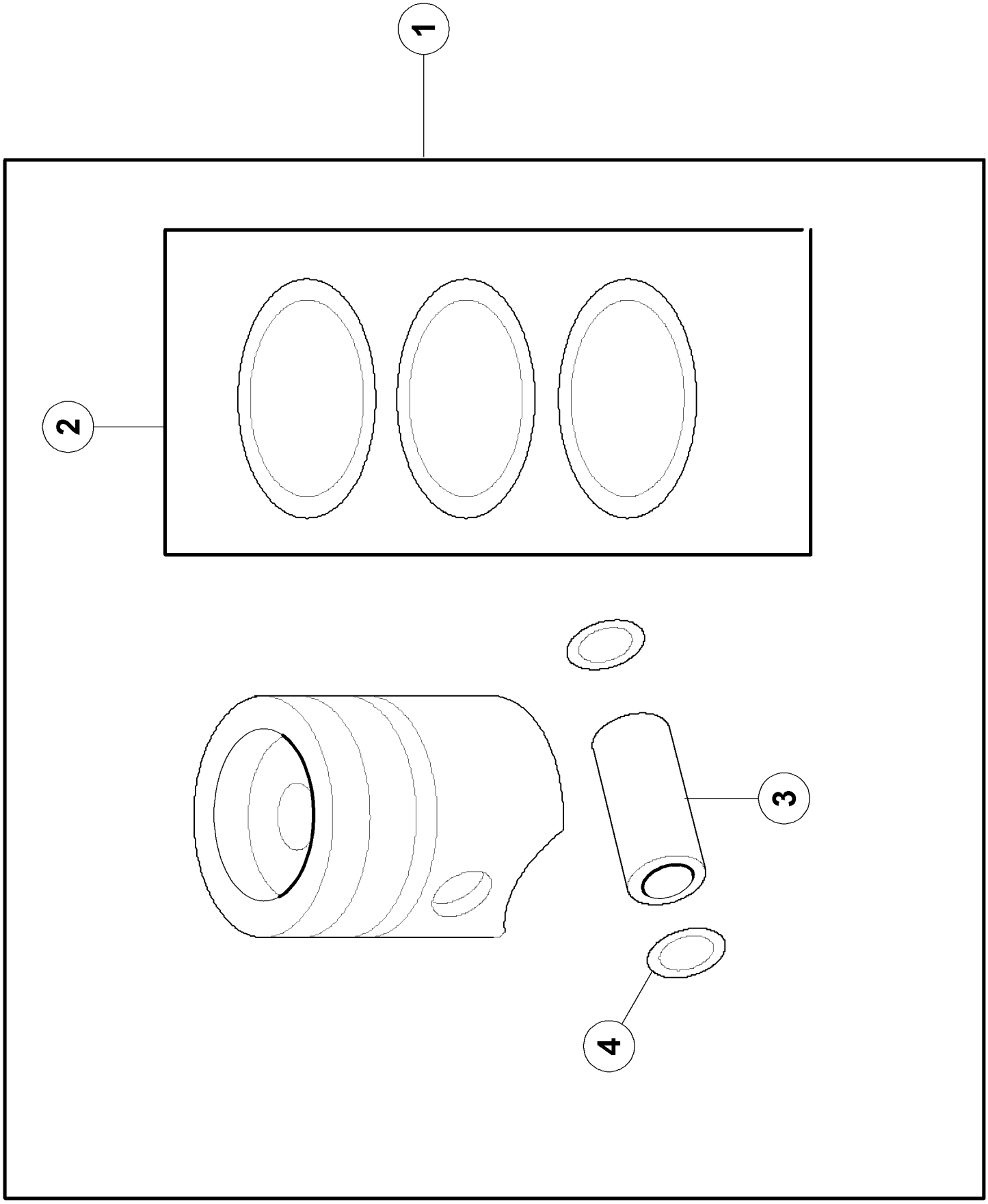
1
2
3
4

Thank you so much for reading.

Please click the “Buy Now!” button below to download the complete manual.

Buy Now

After you pay.

You can download the most perfect and complete manual in the world immediately.

Our support email:

ebooklibonline@outlook.com