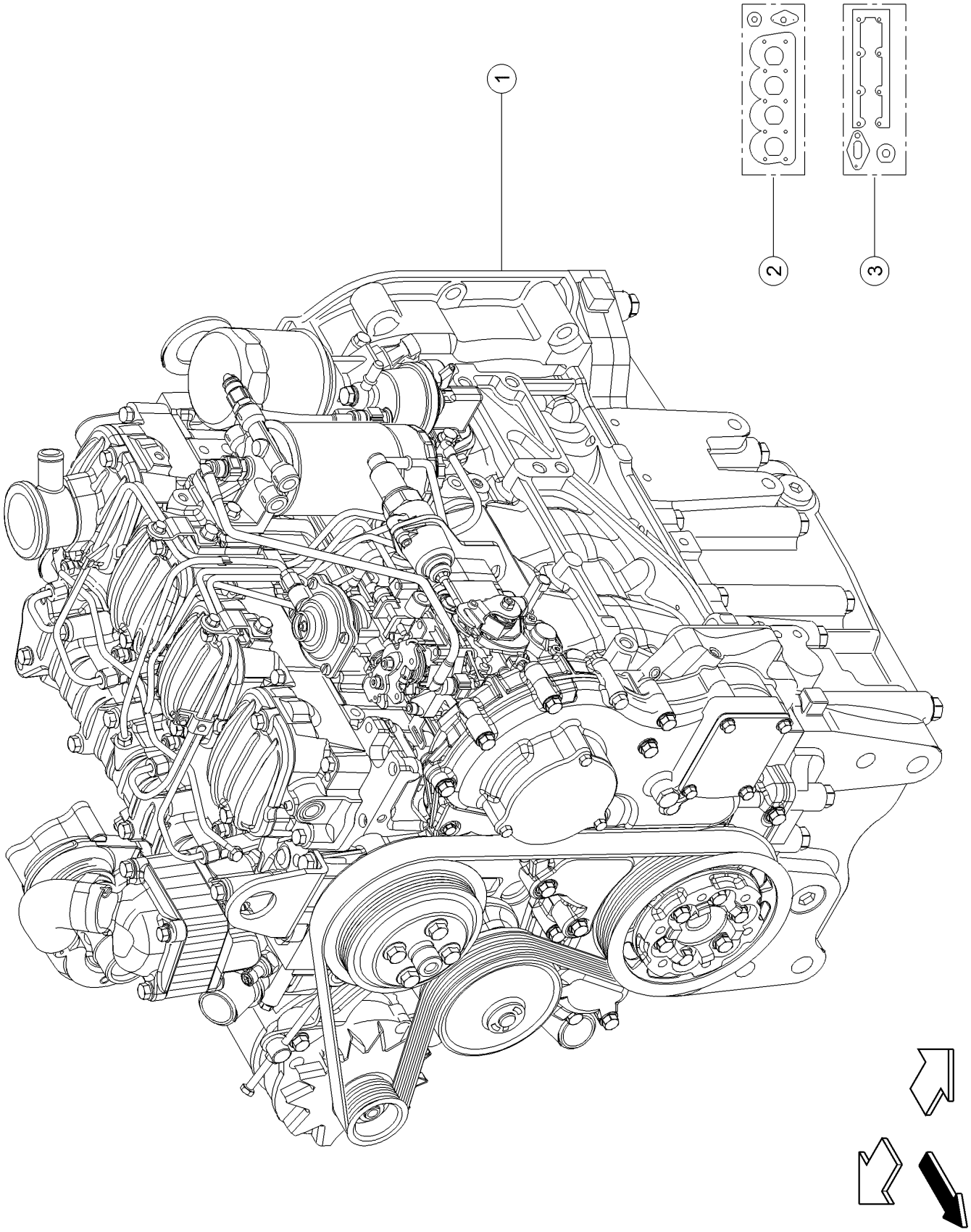
1
2
3

010 COMPLETE ENGINE 1)

Pos.	Part No.	Description	Dimension	Quantity	Conditions
1	**00 1602 783 0**	ENGINE	COMPLETE	1	
2	**00 1139 304 0**	BAG OF SEALS		1	
3	**00 1602 489 0**	ENGINE VALVE	S GRIND SET	1	

1)	**Equipment**		
	Type/Subtype	TO_P02_0030	FPT F5C-T 4cyl 71hp, ISO TR 14396
		A39/120	+ TALOS 210

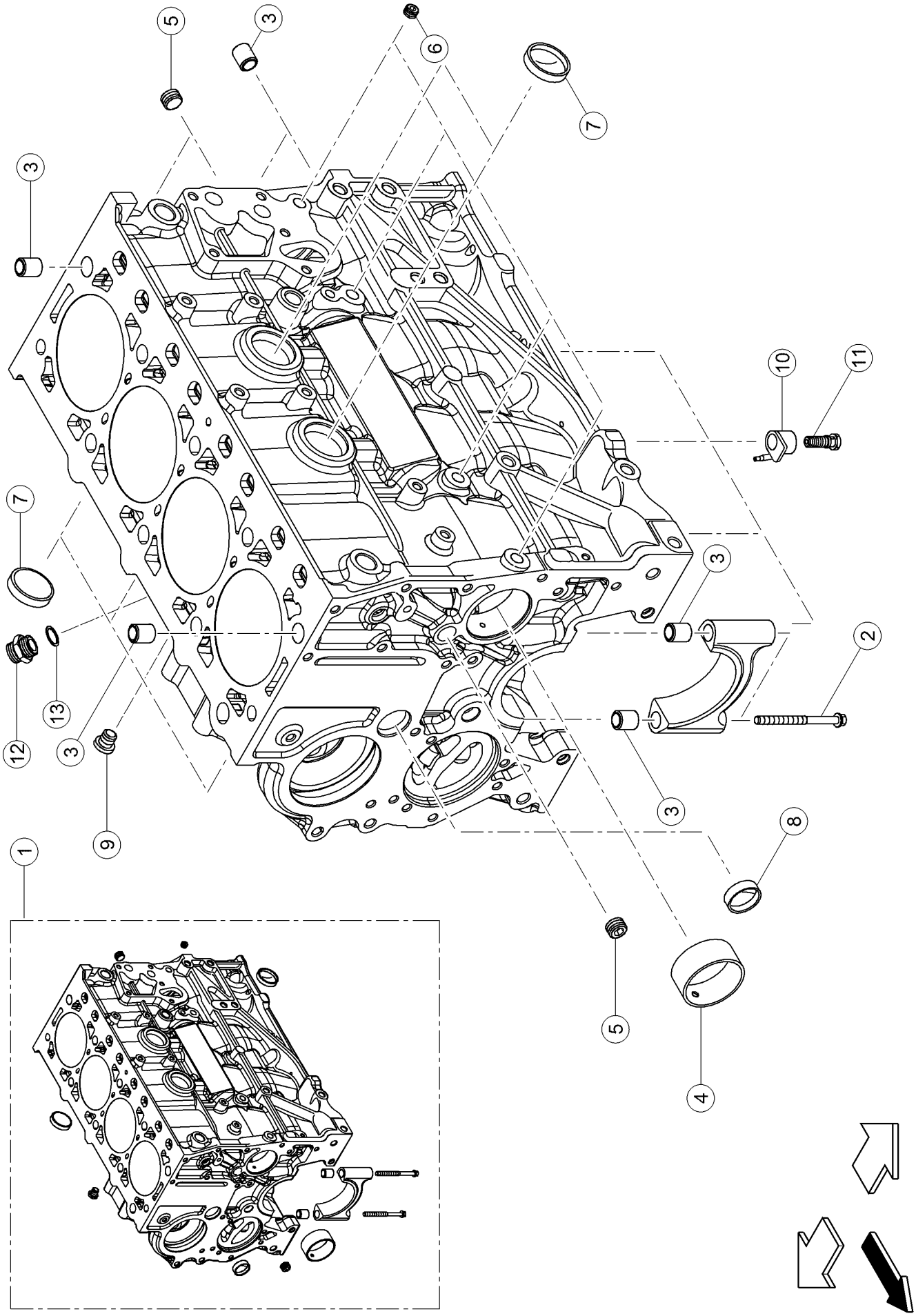
5
3
6
7
3
10
11
7
3
2
13
12
3
9
3
8
1
5
4

100 CRANKCASE 1)

Pos.	Part No.	Description	Dimension	Quantity	Conditions
1	**00 1139 388 0**	HOUSING		1	
2	**60 0503 098 5**	SCREW		10	
3	**00 1139 576 0**	BUSHING		14	
4	**60 0503 098 1**	BUSHING		1	
5	**00 1139 577 0**	PLUG		3	
6	**00 1139 396 0**	PLUG		4	
7	**60 0502 536 5**	PLUG		6	
8	**00 1139 579 0**	PLUG		1	
9	**00 1139 580 0**	PLUG		1	
10	**00 1602 766 0**	OIL PUMP	OIL NOZZLE	4	
11	**00 1602 769 0**	SCREW	CONNECTOR	4	
12	**00 1602 764 0**	UNION		1	
13	**00 1139 581 0**	SEALING RING		1	

1) Equipment

TO_P02_0030	FPT F5C-T 4cyl 71hp, ISO TR 14396
TO_P02_0040	FPT F5C-T 4cyl 78hp, ISO TR 14396
TO_P02_0050	FPT F5C-TI 4cyl 87hp, ISO TR 14396

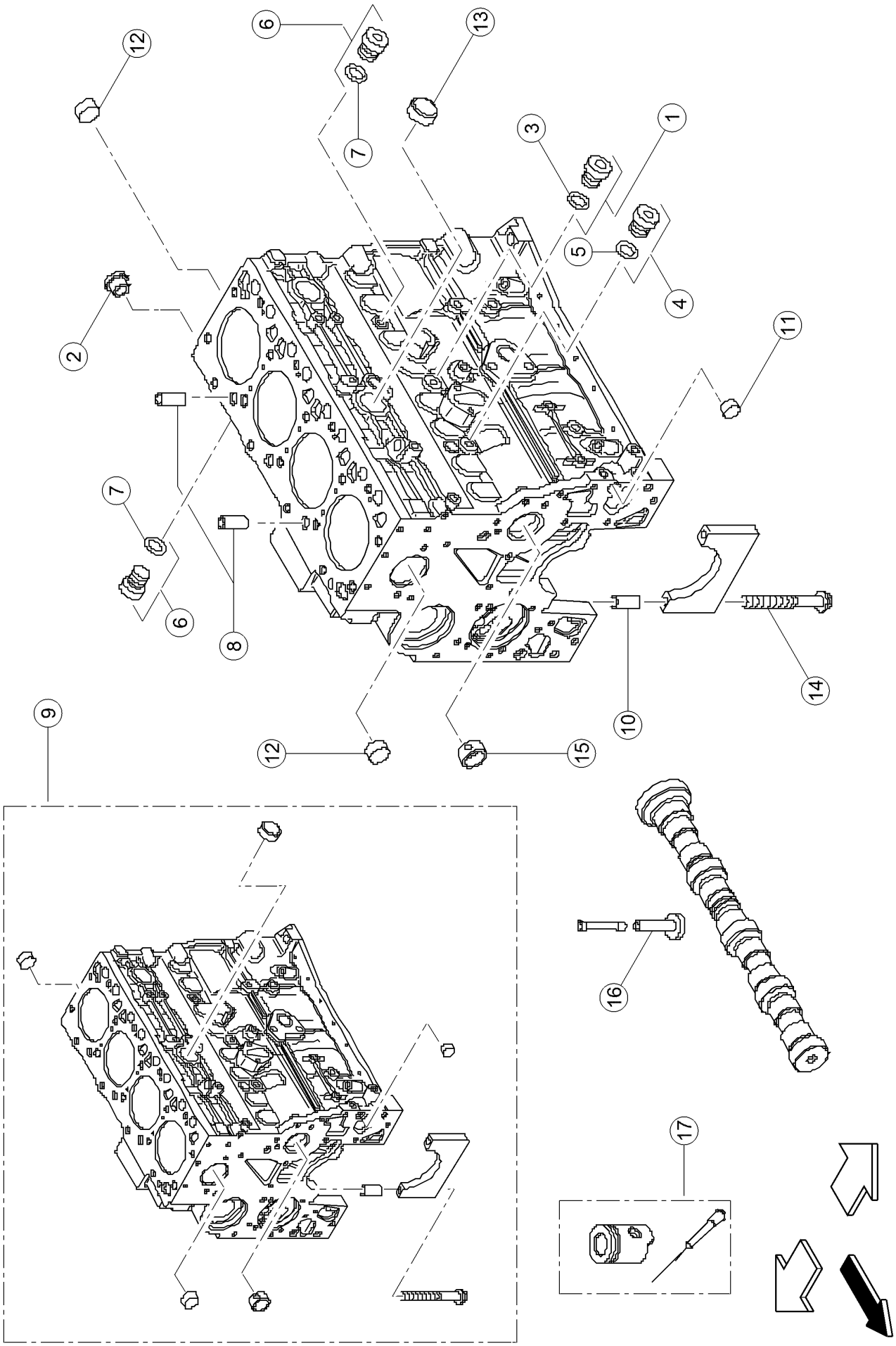
1
2
3
4
5
6
7
8
9
10
11
12
13
14
15
16
17

100 CRANKCASE 1)

Pos.	Part No.	Description	Dimension	Quantity	Conditions
1	**60 0503 100 2**	LOCK		1	
2	**00 1139 588 0**	NOZZLE		1	
3	**00 1139 589 0**	SEALING RING		1	
4	**60 0503 098 3**	PLUG		2	
5	**60 0503 098 4**	O-RING		2	
6	**60 0503 099 3**	PLUG		2	
7	**60 0503 099 4**	O-RING		2	
8	**60 0503 098 7**	CENTRING PIN		2	
9	**00 1131 978 0**	CRANKCASE		1	
10	**60 0503 098 6**	CENTRING PIN		10	
11	**60 0503 099 0**	PLUG		1	
12	**60 0503 098 0**	PLUG		4	
13	**60 0503 098 2**	PLUG		2	
14	**60 0503 098 5**	SCREW		10	
15	**60 0503 098 1**	BUSHING		1	
16	**60 0503 099 2**	BLANKING COVER		8	
17	**60 0503 098 9**	NOZZLE		4	

1) Equipment

TO_P02_0060	FPT NEF-TI 4cyl 95 hp, ISO TR 14396

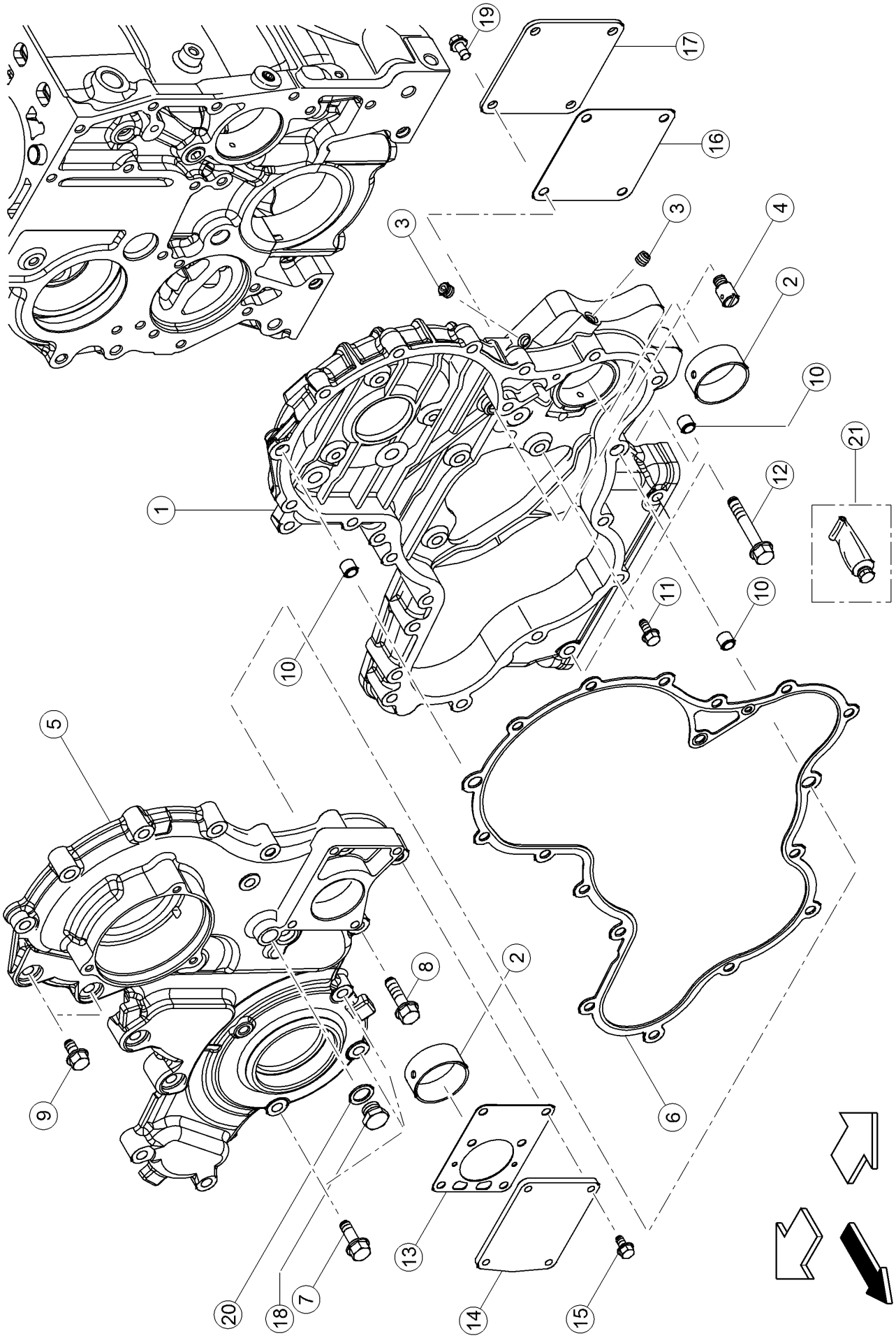
19
17
16
3
3
4
2
10
21
12
1
11
10
10
5
2
8
9
6
13
20
18
7
14
15

120 TIMING CASE 1)

Pos.	Part No.	Description	Dimension	Quantity	Conditions
1	**00 1602 785 0**	HOUSING	TIMINGGEAR	1	
2	**00 1602 483 0**	BUSHING		2	
3	**00 1139 396 0**	PLUG		3	
4	**00 1139 397 0**	NOZZLE		1	
5	**00 1602 786 0**	COVER	FRONT CASE COVER	1	
6	**00 1602 788 0**	GASKET	GKT	1	
7	**00 1139 409 0**	SCREW		4	
8	**00 1139 401 0**	SCREW	M08X35	15	
9	**60 0503 298 1**	SCREW		2	
10	**00 1139 413 0**	BUSHING		4	
11	**00 1139 410 0**	SCREW	M8X23	5	
12	**00 1139 400 0**	SCREW	HM08X50	6	
13	**00 1602 279 0**	GASKET	GKT	1	
14	**60 0503 207 7**	COVER		1	
15	**00 1602 749 0**	HEXAGON HEAD SCREW	M8X1,25X18 MM	4	
16	**60 0503 120 7**	GASKET		1	
17	**60 0503 120 8**	PLATE		1	
18	**00 1139 408 0**	SCREW PLUG		1	
19	**00 1140 737 0**	HEXAGON HEAD BOLT	M6X16	4	
20	**00 1139 407 0**	SEALING RING		1	
21	**00 1602 723 0**	GLUE	ADHESIVE	1	

1) Equipment

TO_P02_0030	FPT F5C-T 4cyl 71hp, ISO TR 14396
TO_P02_0040	FPT F5C-T 4cyl 78hp, ISO TR 14396
TO_P02_0050	FPT F5C-TI 4cyl 87hp, ISO TR 14396

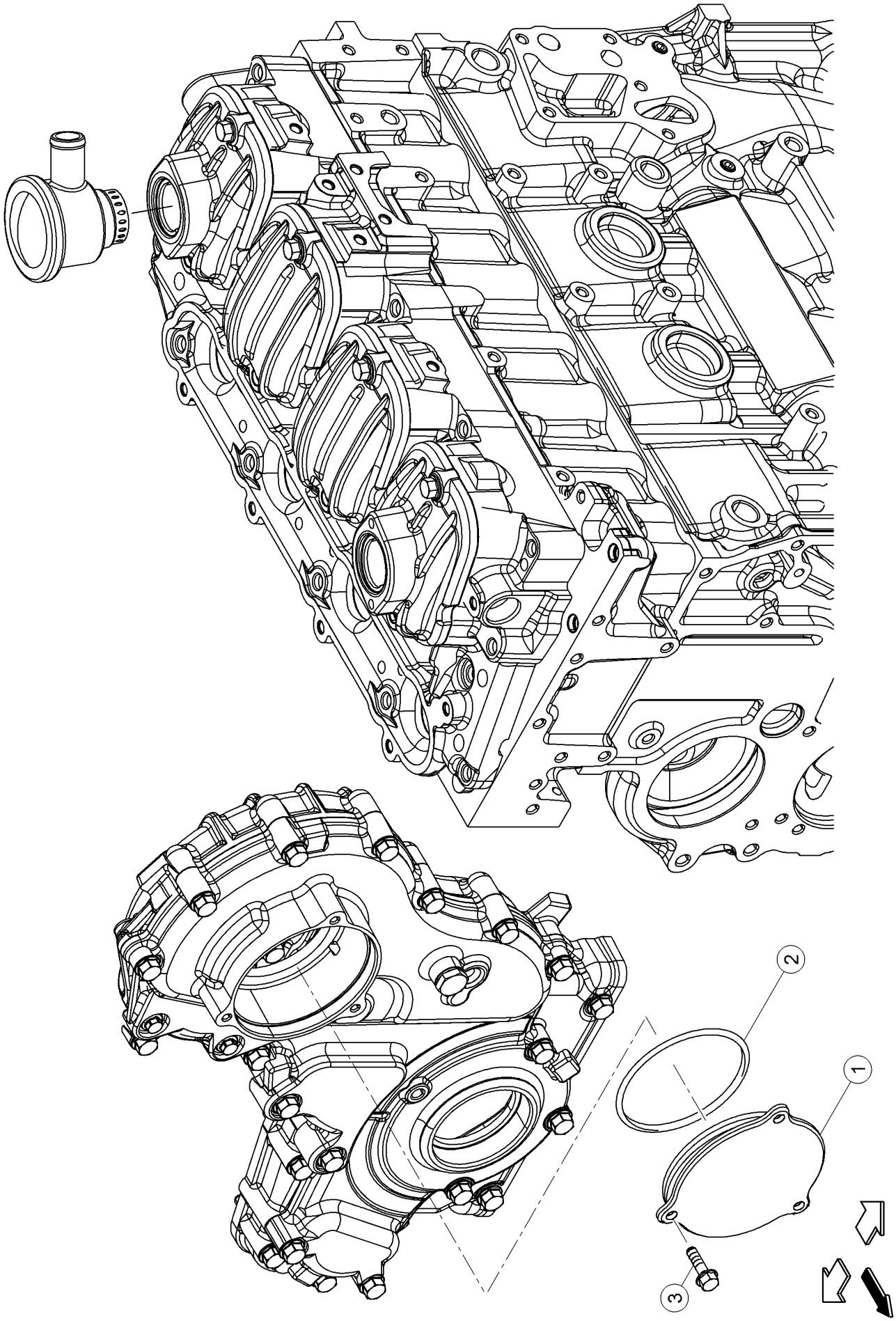
2
1
3

120 TIMING CASE 1)

Pos.	Part No.	Description	Dimension	Quantity	Conditions
1	**00 1141 376 0**	COVER		1	
2	**00 1602 757 0**	O-RING	98,84 MM SP=3,53 MM	1	
3	**00 1602 743 0**	HEXAGON HEAD SCREW	M6X18 MM	3	

1) Equipment

TO_P02_0030	FPT F5C-T 4cyl 71hp, ISO TR 14396
TO_P02_0040	FPT F5C-T 4cyl 78hp, ISO TR 14396
TO_P02_0050	FPT F5C-TI 4cyl 87hp, ISO TR 14396

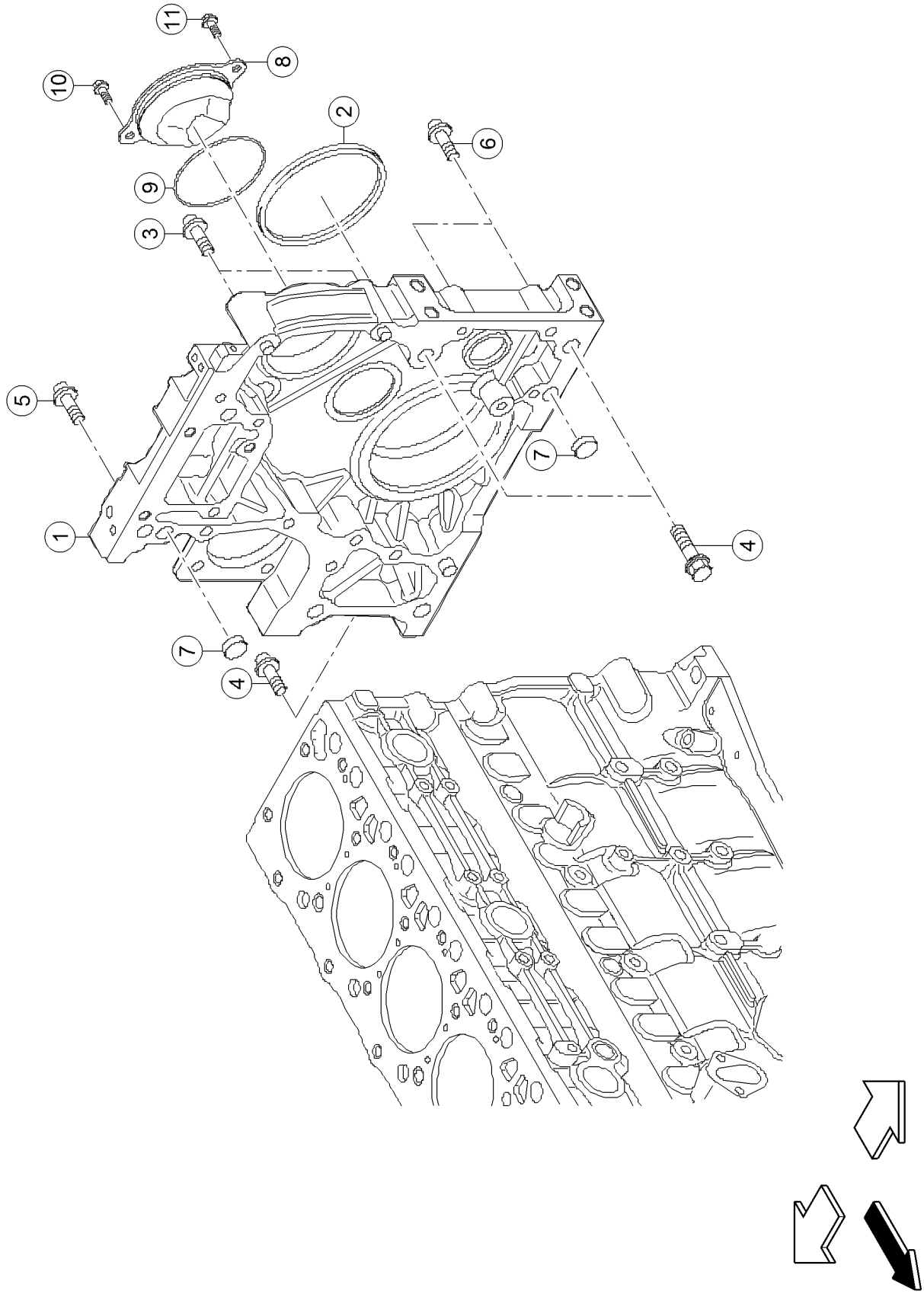
11
8
10
2
6
9
3
5
7
1
4
7
4

120 TIMING CASE 1)

Pos.	Part No.	Description	Dimension	Quantity	Conditions
1	**00 1167 869 0**	CASING		1	
2	**60 0503 100 5**	SEALING RING		1	
3	**00 1139 460 0**	SCREW		2	
4	**00 1139 457 0**	SCREW		3	
5	**00 1139 461 0**	SCREW		2	
6	**00 1139 458 0**	SCREW		14	
7	**60 0503 100 8**	CENTRING PIN		2	
8	**00 1139 452 0**	COVER		1	
9	**00 1139 454 0**	O-RING		1	
10	**00 1139 456 0**	SCREW		1	
11	**00 1139 461 0**	SCREW		1	

1) Equipment

TO_P02_0060 FPT NEF-TI 4cyl 95 hp, ISO TR 14396

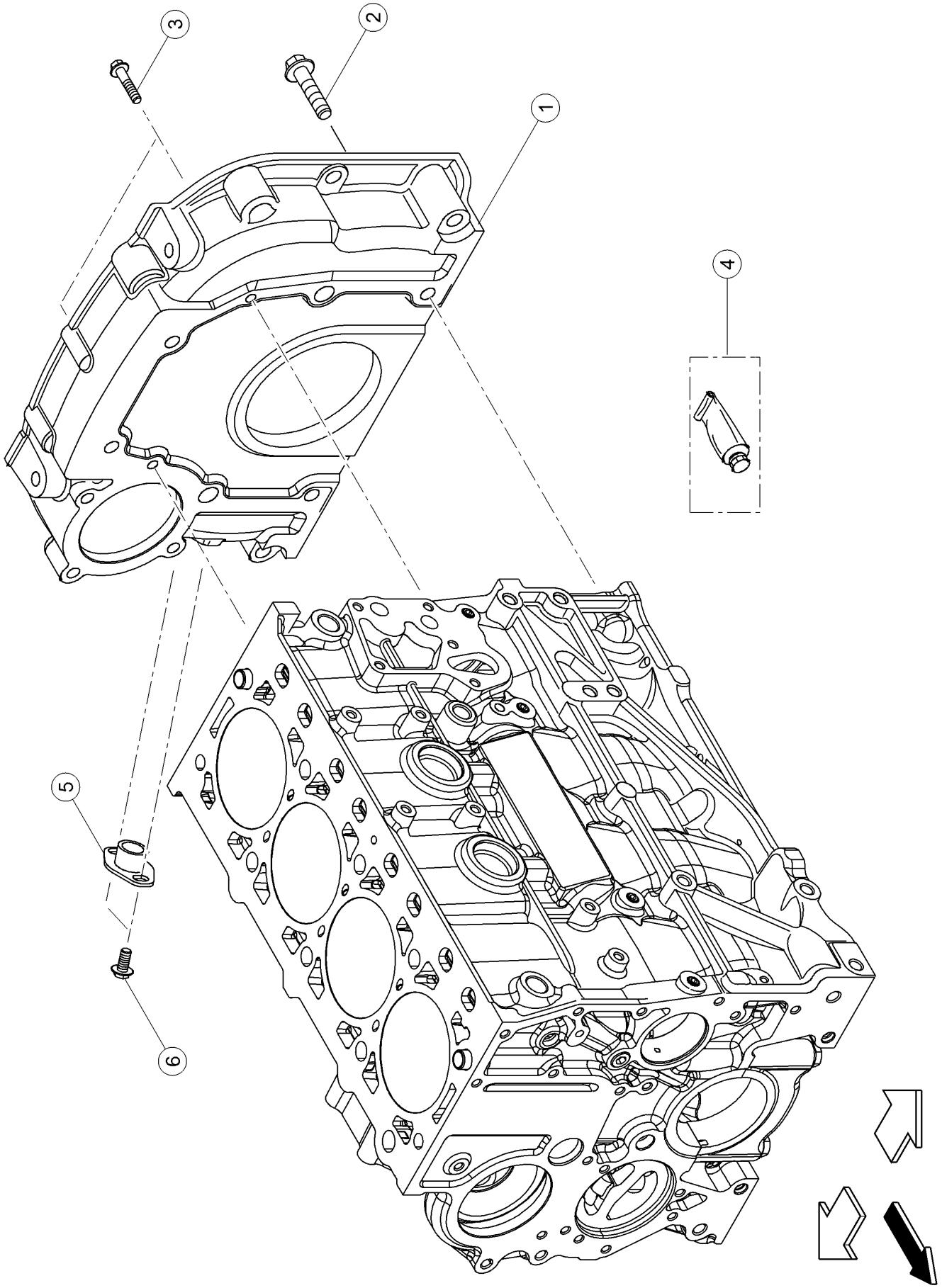
3
2
1
4
5
6

140 FLYWHEEL HOUSING 1)

Pos.	Part No.	Description	Dimension	Quantity	Conditions
1	**00 1139 505 0**	HOUSING		1	
2	**00 1139 526 0**	SCREW		6	
2	**00 1602 739 0**	HEXAGON HEAD SCREW	M12X1,75X40	6	
3	**00 1139 409 0**	SCREW		2	
4	**00 1602 723 0**	GLUE	ADHESIVE	1	
5	**00 1139 511 0**	PLUG		1	
6	**60 0503 298 1**	SCREW		2	

1) Equipment

TO_P02_0030	FPT F5C-T 4cyl 71hp, ISO TR 14396
TO_P02_0040	FPT F5C-T 4cyl 78hp, ISO TR 14396
TO_P02_0050	FPT F5C-TI 4cyl 87hp, ISO TR 14396

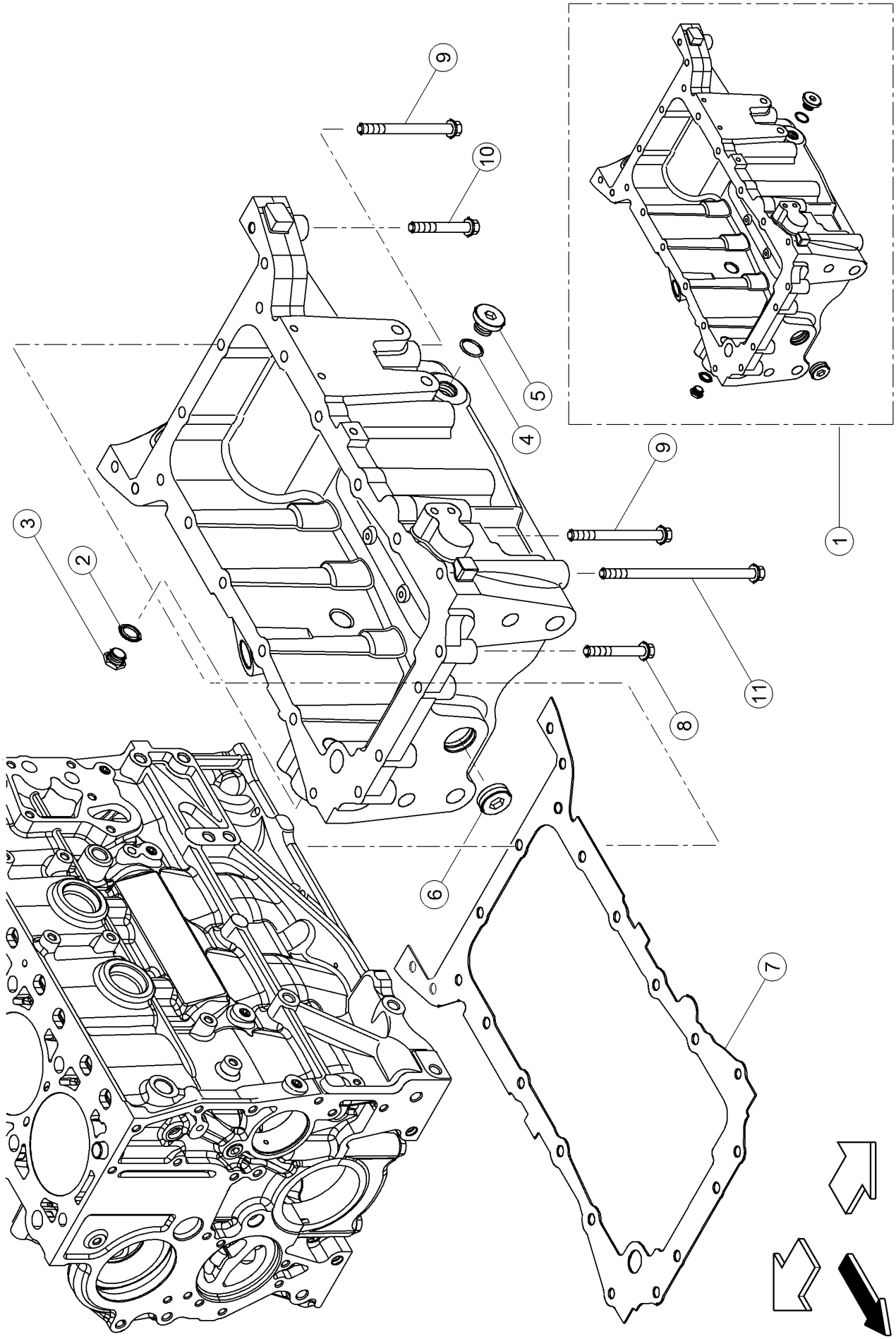
9
10
5
4
9
3
2
1
11
8
6
7

160 OIL PAN 1)

Pos.	Part No.	Description	Dimension	Quantity	Conditions
1	**00 1602 485 0**	OIL SUMP	OIL SUMP	1	
2	**60 0503 101 3**	SEALING RING		1	
3	**00 1138 789 0**	SCREW PLUG		1	
4	**60 0503 101 1**	O-RING		2	
5	**60 0503 101 0**	SCREW PLUG		2	
6	**00 1139 566 0**	SCREW PLUG		1	
7	**00 1139 564 0**	FLAT GASKET		1	
8	**00 1139 562 0**	SCREW		8	
9	**00 1139 550 0**	SCREW		4	
10	**00 1139 551 0**	SCREW		2	
11	**00 1602 748 0**	HEXAGON HEAD SCREW	M10X180 MM	8	

1) Equipment

TO_P02_0030	FPT F5C-T 4cyl 71hp, ISO TR 14396
TO_P02_0040	FPT F5C-T 4cyl 78hp, ISO TR 14396
TO_P02_0050	FPT F5C-TI 4cyl 87hp, ISO TR 14396

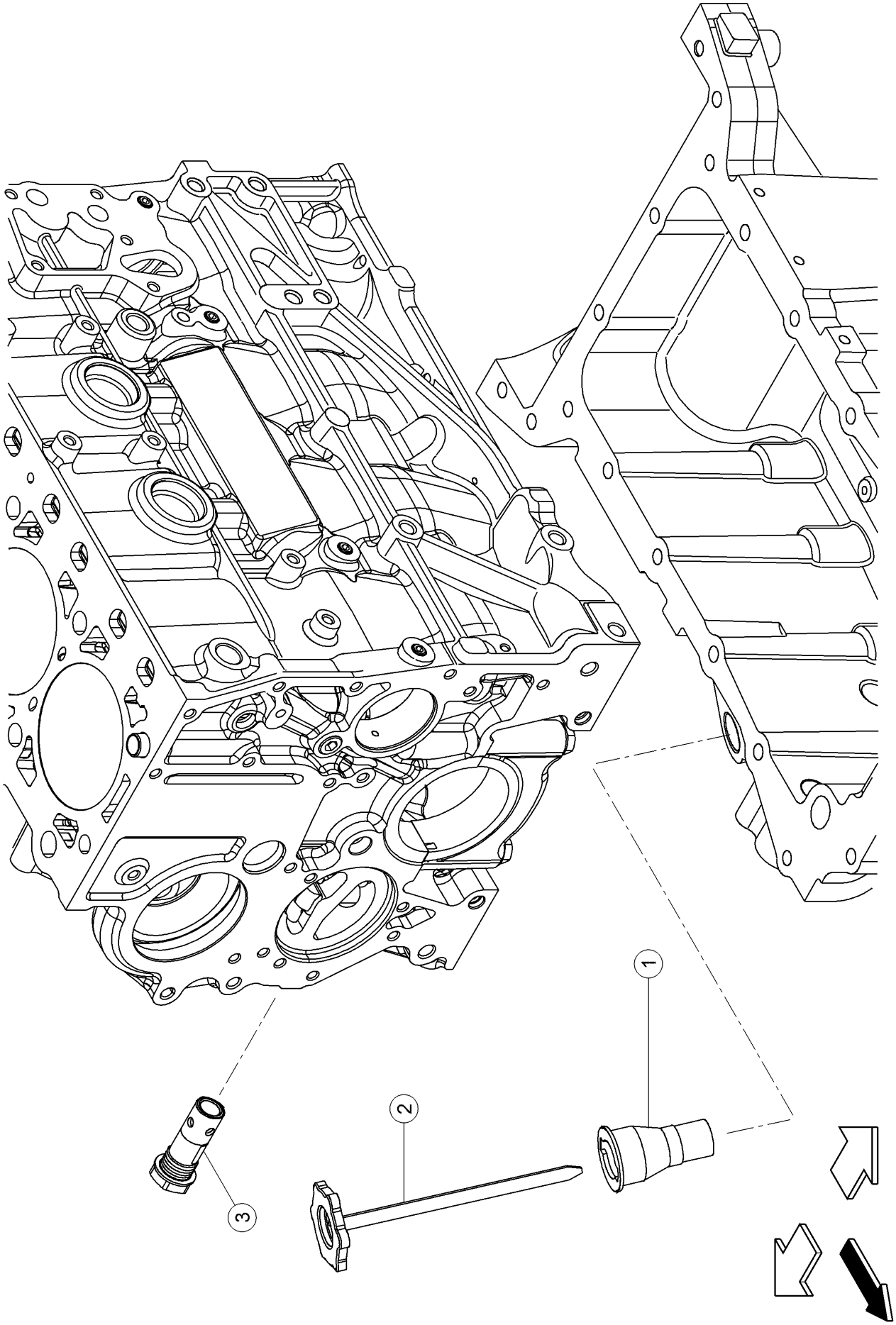
1
2
3

Thank you so much for reading.

Please click the “Buy Now!” button below to download the complete manual.

Buy Now

After you pay.

You can download the most perfect and complete manual in the world immediately.

Our support email:

ebooklibonline@outlook.com