Fig. 011 CYLINDER BLOCK

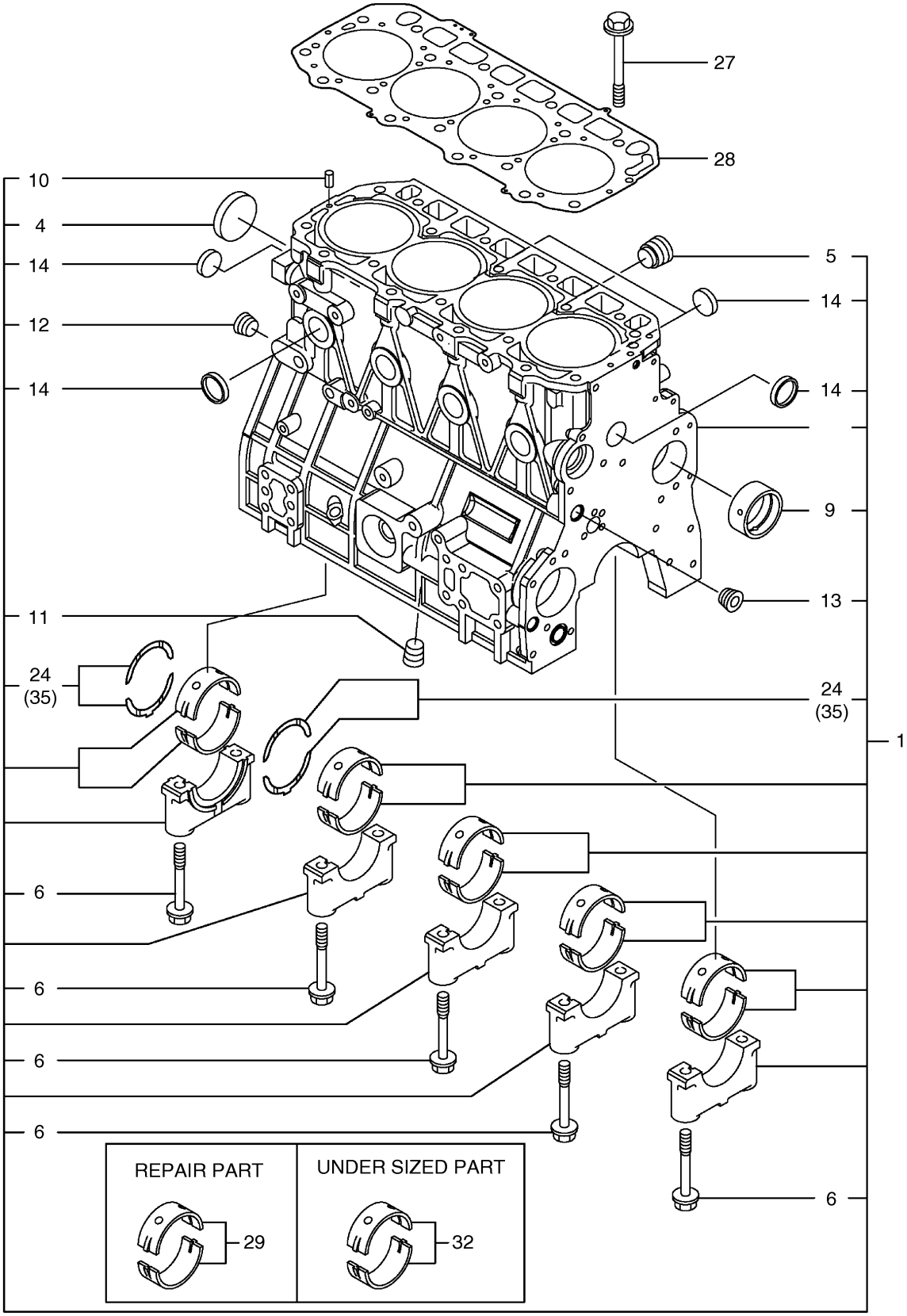

DOOSAN Doosan Infracore

Fig. 011 CYLINDER BLOCK

Key No	Part No	Description	Qty	S.C	Serial No	ICA	Replacable	Qty
1	K9006174	BLOCK ASS'Y;CYLINDER	1					
4	2.181-00317	PLUG	1					
5	2.181-00306	PLUG	1					
6	2.120-00135	BOLT	10					
9	2.408-00056	BUSH;CAMSHAFT	1					
10	S5740860	PIN;SPRING	2					
11	2181-1116D3	PLUG;HEX. SOCKET	1					
12	2181-1116D3	PLUG;HEX. SOCKET	1					
13	2181-1116D3	PLUG;HEX. SOCKET	1					
14	2.181-00314	PLUG	8					
24	A408306	WASHER;THRUST	2					
27	A408073	BOLT;HEAD	18					
28	K9002122	GASKET;CYLINDER HEAD	1					
29	A408075	MAIN METAL SET	5					
32	A408308	METAL;MAIN(0.25)	5	US				
35	A408309	WASHER;THRUST(0.25)	2	OS				

Fig. 012 GEAR HOUSING

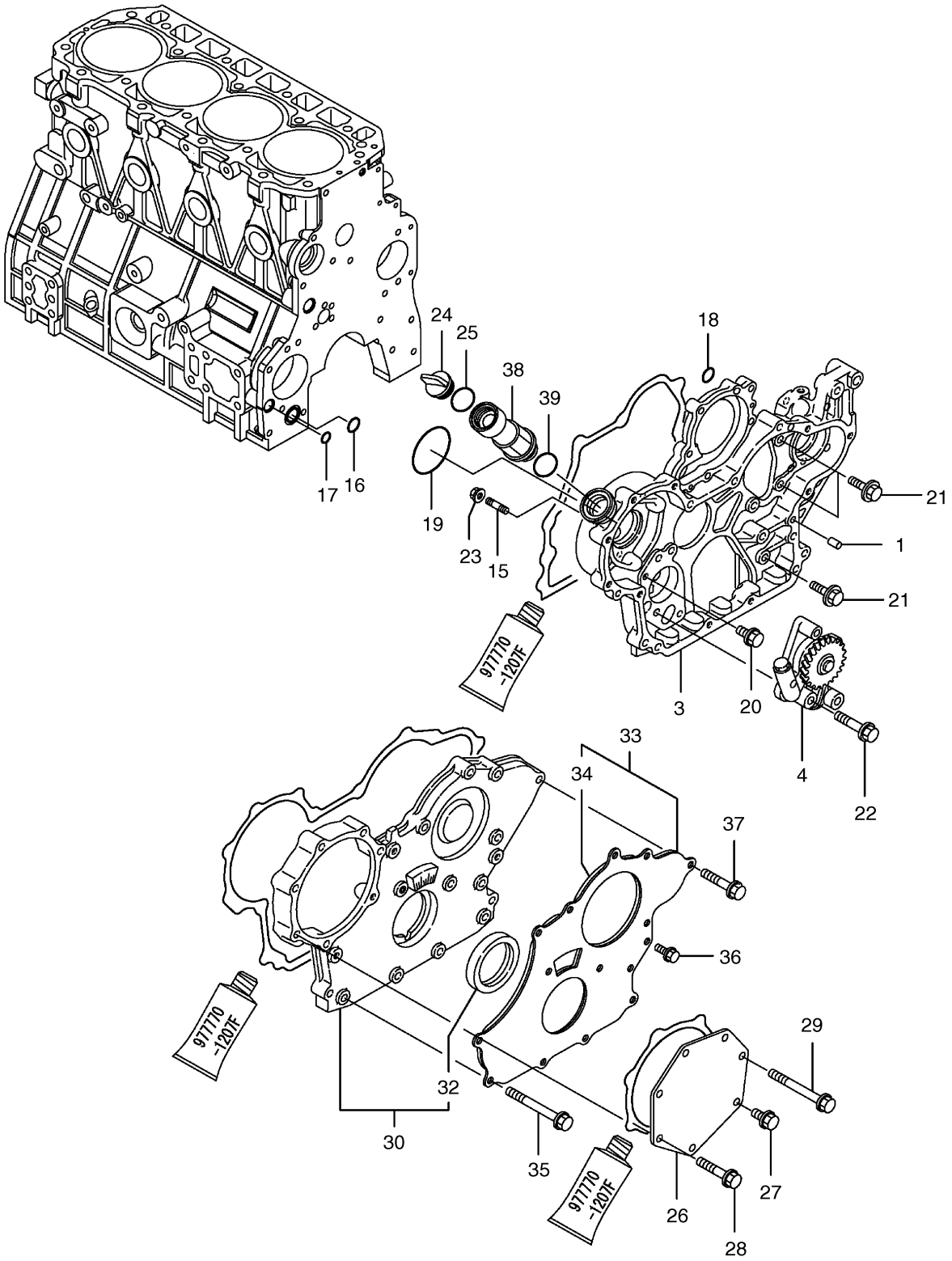

DOOSAN Doosan Infracore

Fig. 012 GEAR HOUSING

Key No	Part No	Description	Qty	S.C	Serial No	ICA	Replacable	Qty
1	S5701041	PIN;PARALLEL	4					
3	K9006142	HOUSING;GEAR	1					
4	A408112	PUMP;OIL	1					
15	2.120-00329	BOLT;STUD	4					
16	S8000201	O-RING	1					
17	S8000141	O-RING	1					
18	S8000070	O-RING	1					
19	2.180-01237	PACKING	1					
20	2.120-00136	BOLT;PLATED M8X16	1					
21	2.120-00137	BOLT M8X20	3					
22	2.120-00044	BOLT M8X45	3					
23	2.121-00268	NUT	4					
24	D460483	CAP;FILLER	1					
25	S8000320	O-RING	1					
26	2.430-00249	COVER	1					
27	2.120-00137	BOLT M8X20	1					
28	2.120-00044	BOLT M8X45	5					
29	K9006166	BOLT M 8X 75	1					
30	2.423-00133	GEAR HOUSING	1					
32	2.180-01236	SEAL;OIL	1					
33	2.304-00002	COVER ASS'Y	1					
34	2.161-00028	SPONGE	1					
35	2.120-00140	BOLT;PLATED M8X70	6					
36	2.120-00136	BOLT;PLATED M8X16	3					
37	2.120-00139	BOLT;PLATED M8X40	5					
38	D471105	PIPE	1					
39	S8000320	O-RING	1					

Fig. 013 FLYWHEEL HOUSING & OIL PAN

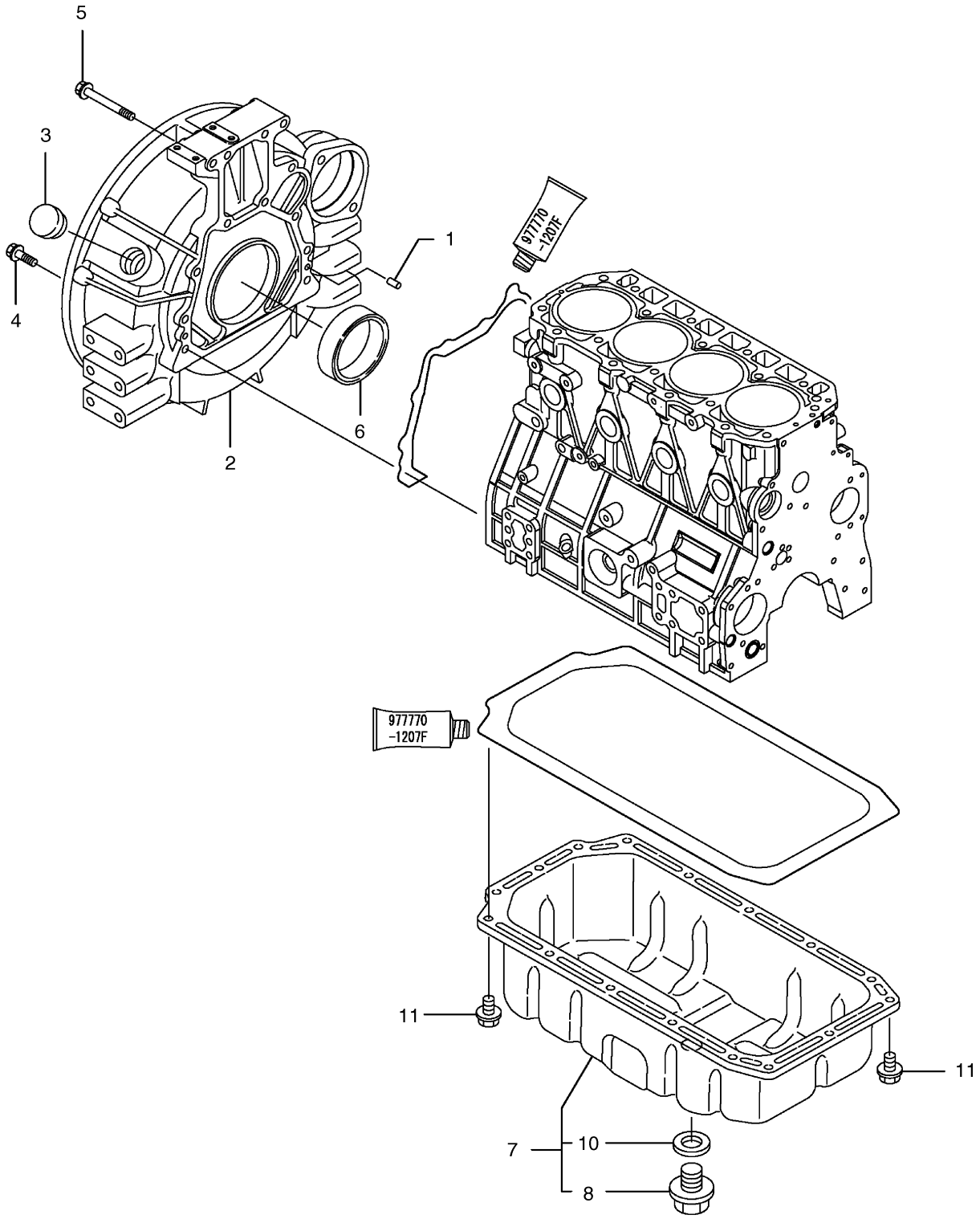

DOOSAN Doosan Infracore

Fig. 013 FLYWHEEL HOUSING & OIL PAN

Key No	Part No	Description	Qty	S.C	Serial No	ICA	Replacable	Qty
1	S5701041	PIN;PARALLEL	2					
2	2.430-00302	HOUSING;FLYWHEEL	1					
3	2.430-00083	CAP;FLYWHEEL COVER	1					
4	2.120-00142	BOLT;PLATED M10X35	9					
5	2.120-00141	BOLT;PLATED M10X70	4					
6	A408072	SEAL;OIL	1					
7	K9002123	OIL PAN ASS'Y	1					
8	2.181-00355	PLUG;DRAIN	1					
10	2.180-00910	SEAL;WASHER	1					
11	2.120-00143	BOLT M8X12	16					

Fig. 014 CYLINDER HEAD & BONNET

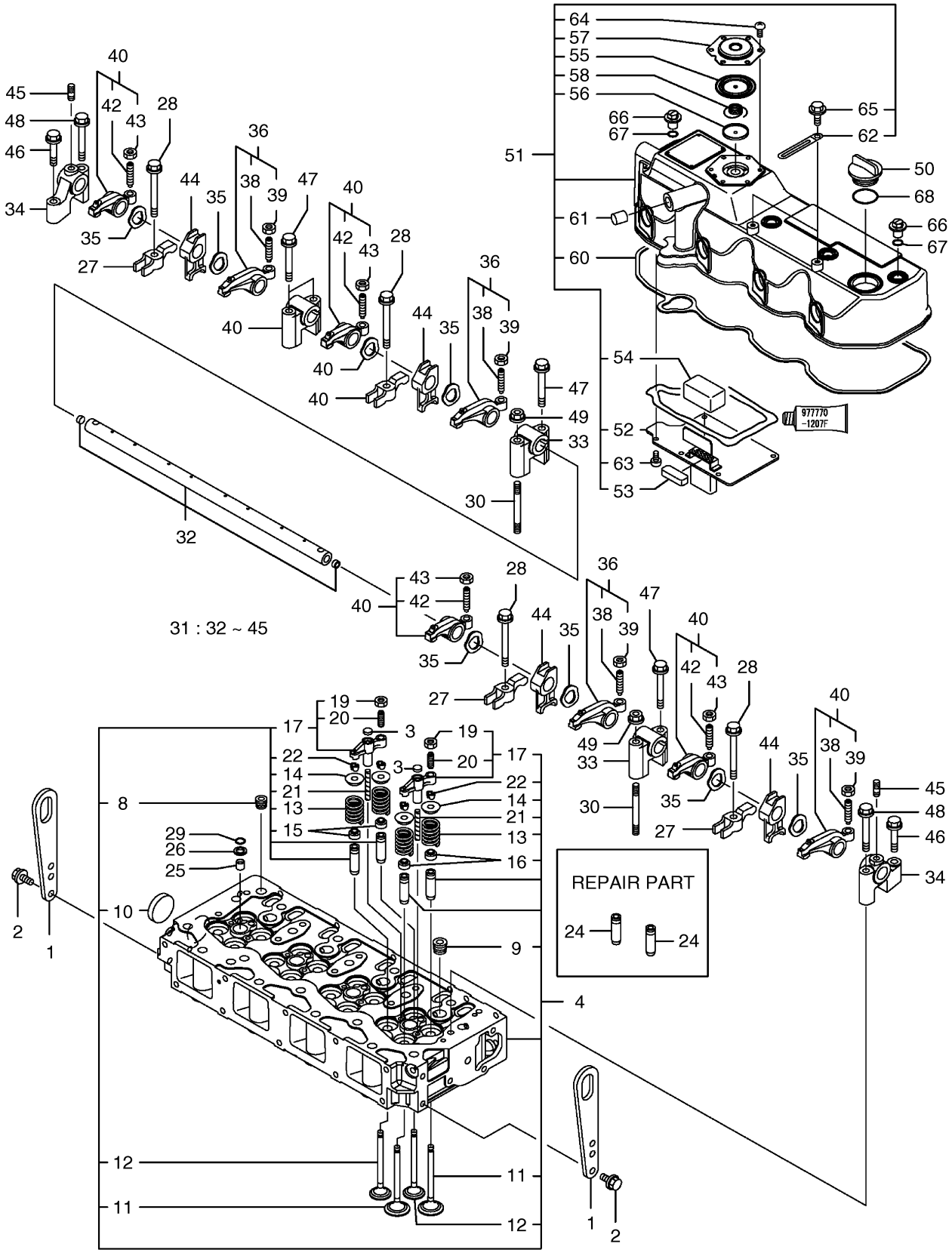

DOOSAN Doosan Infracore

Fig. 014 CYLINDER HEAD & BONNET

Key No	Part No	Description	Qty	S.C	Serial No	ICA	Replacable	Qty
1	2.197-00046	LIFTER;ENGINE	2					
2	2.120-00136	BOLT;PLATED M8X16	4					
3	A408332	SEAT A;VALVE BRIDGE	8					
4	K9006081	CYLINDER HEAD ASS'Y	1					
8	2181-1116D2	PLUG	1					
9	2181-1116D3	PLUG;HEX. SOCKET	4					
10	2.181-00308	PLUG	1					
11	A408079	VALVE;INTAKE	8					
12	A408080	VALVE;EXHAUST	8					
13	A408081	SPRING;VALVE	16					
14	A408076	RETAINER;SPRING	16					
15	A408289	SEAL;VALVE STEM	8					
16	2.180-01240	SEAL;VALVE STEM	8					
17	2.426-00064	VALVE BRIDGE ASS'Y	8					
19	2.121-00084	NUT	8					
20	2.120-00850	SCREW;VALVE BRIDGE	8					
21	2.131-00534	GUIDE;VALVE BRIDGE	8					
22	2.217-00072	COTTER ASS'Y	16					
24	A408091	GUIDE;VALVE	16					
25	2.158-00004	PROTECTOR;NOZZLE	4					
26	2.427-00018	SEAT;NOZZLE	4					
27	2.223-00001	RETAINER;VALVE	4					
28	2.120-00853	BOLT;FLANGE RETAINER	4					
29	S8000120	O-RING	4					
30	A408342	BOLT M8X80	2					
31	A408087	SUPPORT CMP	1					
32	A408082	SHAFT;ROCKER ARM	1					
33	A408083	SUPPORT A	3					
34	A408084	SUPPORT B	2					
35	A408343	WASHER	8					
36	A408088	ARM ASS'Y;ROCKER	4					
38	2.120-00694	SCREW;VALVE	4					
39	2.121-00084	NUT	4					
40	A408089	ARM ASS'Y;ROCKER	4					
42	2.120-00694	SCREW;VALVE	4					
43	2.121-00084	NUT	4					

Key No	Part No	Description	Qty	S.C	Serial No	ICA	Replacable	Qty
44	2.610-00001	SUPPORT	4					
45	2.120-00852	STUD M8X22	2					
46	2.120-00139	BOLT;PLATED M8X40	2					
47	2.120-00151	BOLT;PLATED M8X60	4					
48	2.120-00151	BOLT;PLATED M8X60	2					
49	2.121-00267	NUT	2					
50	D460483	CAP;FILLER	1					
51	K9006080	BONNET ASSY	1					
52	K9005939	PLATE;BAFFLE	1					
53	K9005940	BAFFLE	1					
54	2.464-00011	BAFFLE	1					
55	A408355	DIAPHRAGM;BREATHER	1					
56	A408356	PLATE;CENTER	1					
57	A408357	PLATE;BREATHER	1					
58	A408358	SPRING;DIAPHRAGM	1					
60	A408292	GASKET;BONNET	1					
61	A408359	PLUG	1					
62	K9006154	CLIP	2					
63	2.120-00496	SCREW	6					
64	2.120-00496	SCREW	6					
65	2.120-00028	BOLT M6X12	2					
66	2.132-00005	KNOB	4					
67	S8000120	O-RING	4					
68	S8000320	O-RING	1					

Fig. 015 INTAKE MANIFOLD

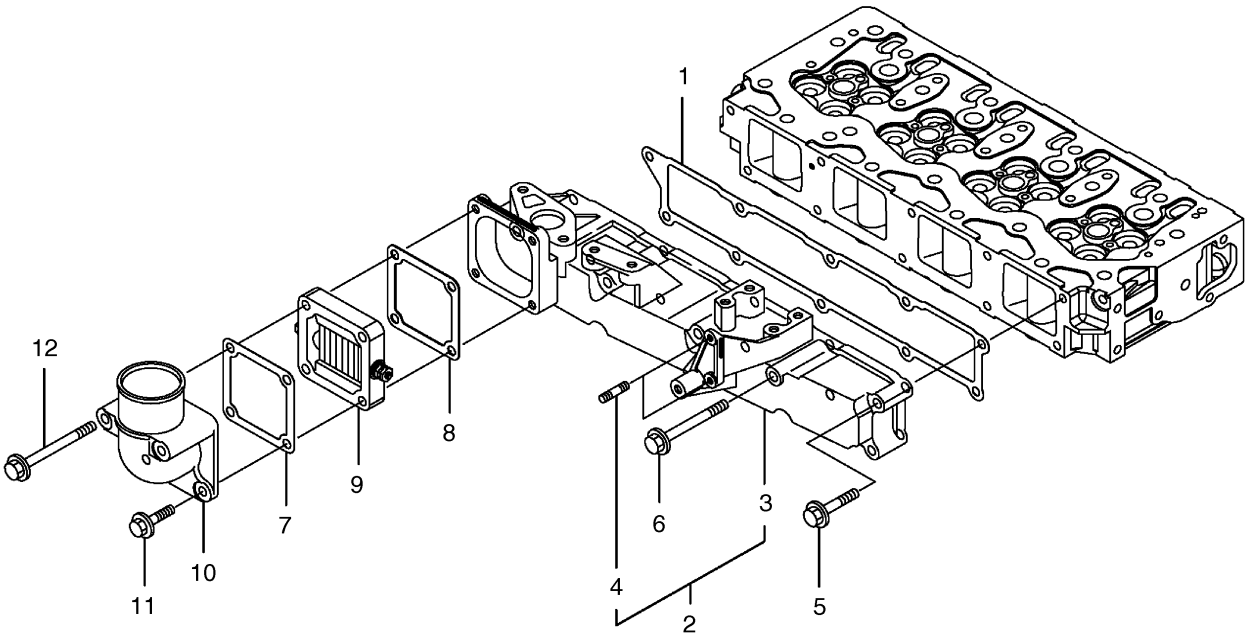

DOOSAN Doosan Infracore

Fig. 015 INTAKE MANIFOLD

Key No	Part No	Description	Qty	S.C	Serial No	ICA	Replacable	Qty
1	A408094	PACKING;INTAKE MANIFOLD	1					
2	K9006083	MANIFOLD ASSY;INTAKE	1					
3	K9006082	MANIFOLD;INTAKE	1					
4	2.317-00034	STUD	2					
5	2.120-00044	BOLT M8X45	6					
6	2.120-00146	BOLT M8X80	4					
7	D471131	GASKET	1					
8	D471132	GASKET	1					
9	D471133	HEATER;AIR	1					
10	K9005934	PIPE;AIR HEATER	1					
11	2.120-00139	BOLT;PLATED M8X40	2					
12	K9005947	BOLT	2					

Fig. 016 EXHAUST MANIFOLD

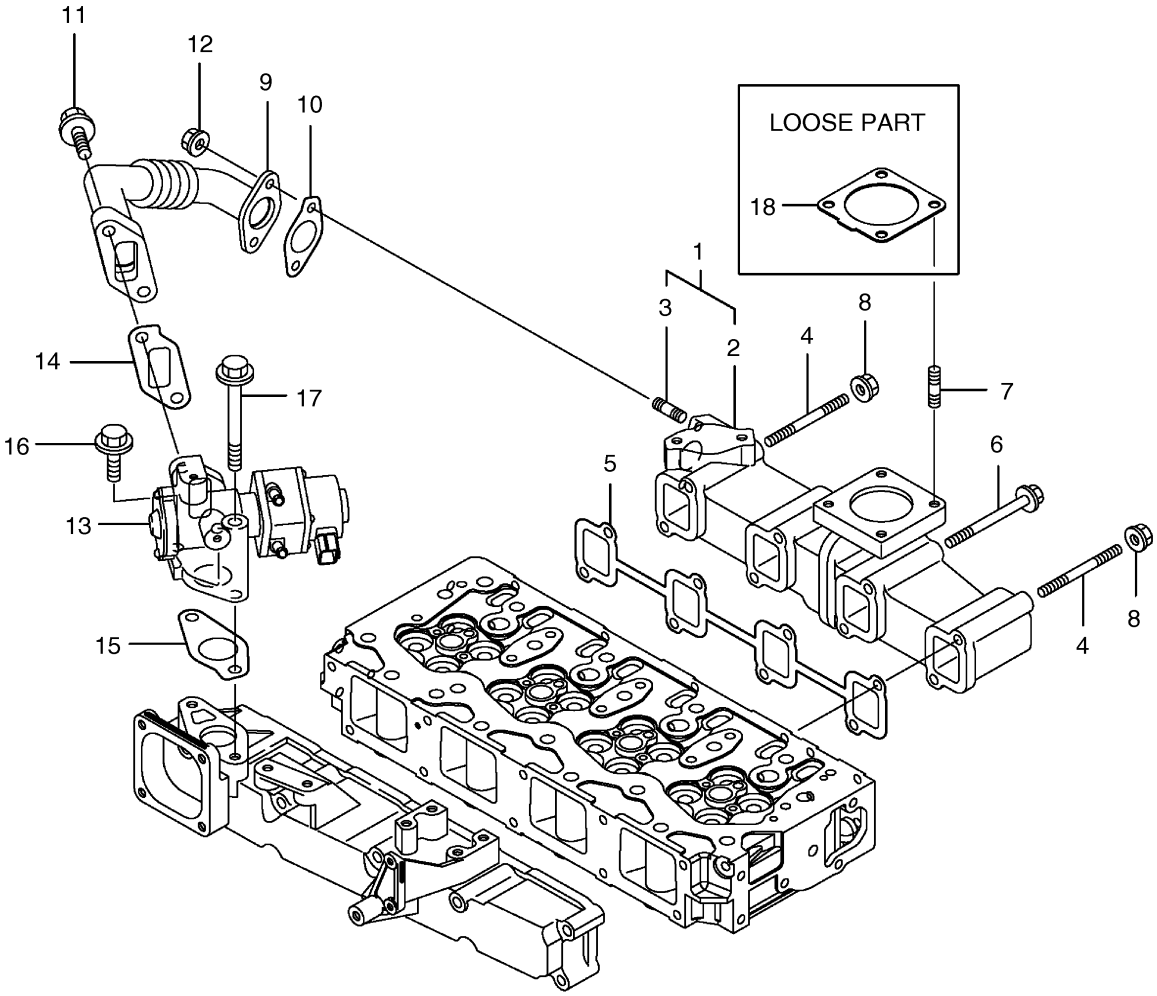

DOOSAN Doosan Infracore

Fig. 016 EXHAUST MANIFOLD

Key No	Part No	Description	Qty	S.C	Serial No	ICA	Replacable	Qty
1	K9006085	MANIFOLD ASSY;EXHAUST	1					
2	K9006084	MANIFOLD;EXHAUST	1					
3	K9006075	BOLT;STUD M8X20	2					
4	K9006073	BOLT;STUD M8X100	2					
5	A408095	GASKET;EXHAUST MAINFOLD	1					
6	K9006038	BOLT M8X90	6					
7	2.120-00147	BOLT M8X22	4					
8	2.121-00267	NUT	2					
9	K9006086	PIPE	1					
10	K9006087	GASKET;EGR PIPE	1					
11	K9006167	BOLT	2					
12	2.121-00267	NUT	2					
13	K9006089	VALVE;EGR	1					
14	K9006090	GASKET(EGR IN)	1					
15	K9006092	GASKET(EGR OUT)	1					
16	K9006167	BOLT	1					
17	K9006169	BOLT	1					
18	K9002146	GASKET;SILENCER	1					

Fig. 017 CAM SHAFT & DRIVING GEAR

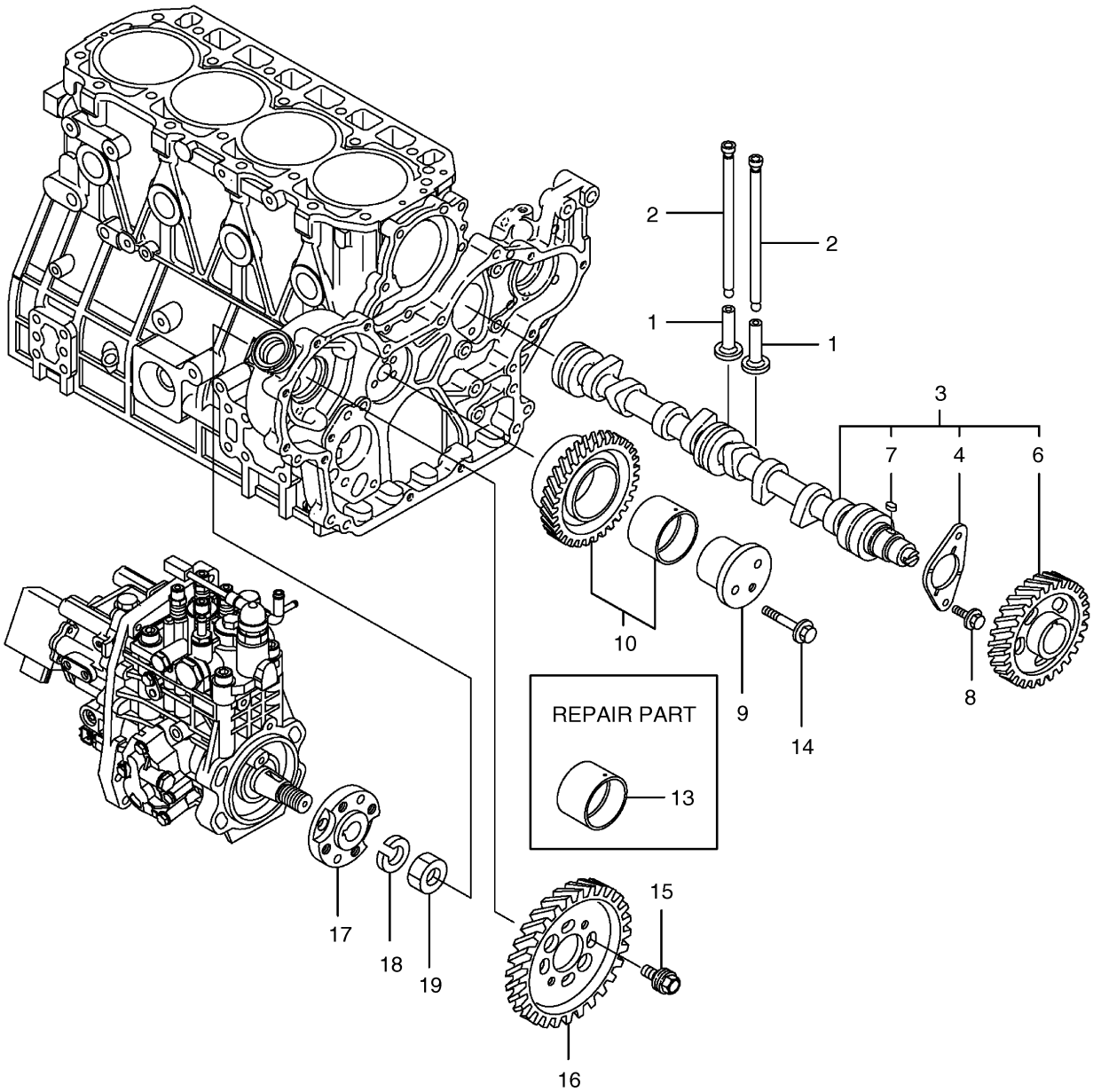

DOOSAN Doosan Infracore

Fig. 017 CAM SHAFT & DRIVING GEAR

Key No	Part No	Description	Qty	S.C	Serial No	ICA	Replacable	Qty
1	2.429-00133	TAPPET	8					
2	A408100	ROD;PUSH	8					
3	K9006079	CAM SHAFT ASSY	1					
4	2.177-00050	METAL;THRUST	1					
6	A408099	GEAR;CAM SHAFT	1					
7	2.113-00005	KEY	1					
8	2.120-00136	BOLT;PLATED M8X16	2					
9	A408373	SHAFT;IDLER GEAR	1					
10	2.403-00143	IDLE GEAR ASS'Y	1					
13	2.408-00069	BUSH;IDLE GEAR	1					
14	2.120-00148	BOLT;PLATED M8X55	3					
15	2.120-00857	BOLT	4					
16	K9002124	GEAR;INJ PUMP	1					
17	K9002125	FLANGE	1					
18	K9002126	WASHER;SPRING	1					
19	K9005948	NUT;LOCK M18	1					

Fig. 018 CRANK SHAFT & PISTON

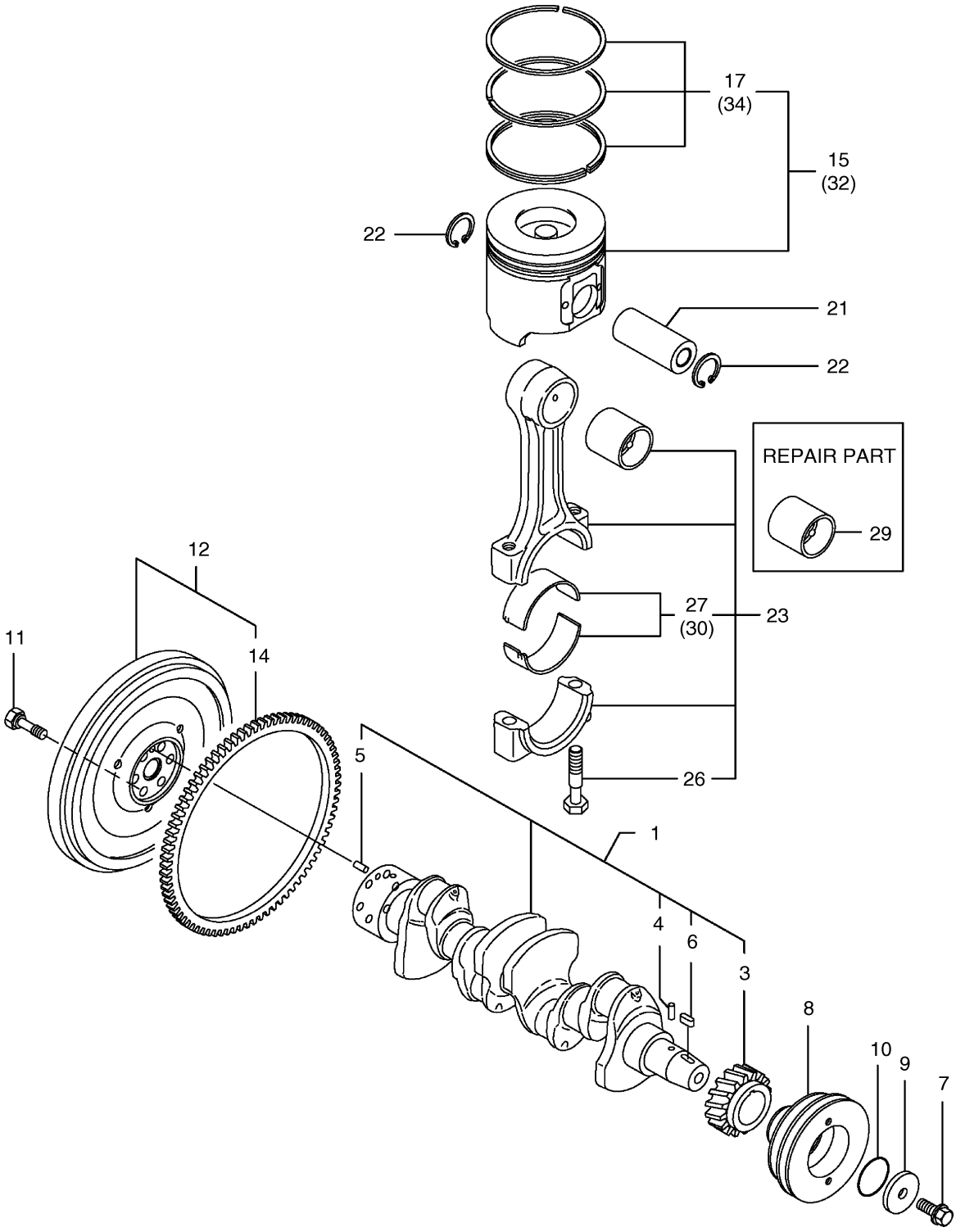

DOOSAN Doosan Infracore

Fig. 018 CRANK SHAFT & PISTON

Key No	Part No	Description	Qty	S.C	Serial No	ICA	Replacable	Qty
1	A408104	CRANK SHAFT ASS'Y	1					
3	A408102	GEAR;CRANK SHAFT	1					
4	A408379	PIN;PARALLEL	1					
5	A408380	PIN;PARALLEL	1					
6	2.113-00005	KEY	1					
7	2.120-00858	BOLT;V-PULLEY	1					
8	2.107-00001	PULLEY;V	1					
9	2.114-00888	WASHER	1					
10	2.180-00529	O-RING	1					
11	A408384	BOLT;FLYWHEEL	6					
12	2.154-00013	FLYWHEEL ASS'Y	1					
14	2.403-00237	GEAR;RING	1					
15	K9006095	PISTON ASS'Y	4					
17	K9006094	RING SET;PISTON	4					
21	A408105	PIN;PISTON	4					
22	2.115-00420	RING;SNAP	8					
23	K9002127	CONNECTING ROD ASS'Y	4					
26	A408109	BOLT;ROD	8					
27	A408390	METAL ASS'Y(STD.)	4					
29	A408111	BUSH;PISTON PIN	4					
30	A408391	METAL ASSY U.S=0.25	4	US				
32	K9006175	PISTON ASS'Y O.S=0.25	4	OS				
34	K9006176	RING SET O.S=0.25	4	OS				

Fig. 019 LUB.OIL SYSTEM

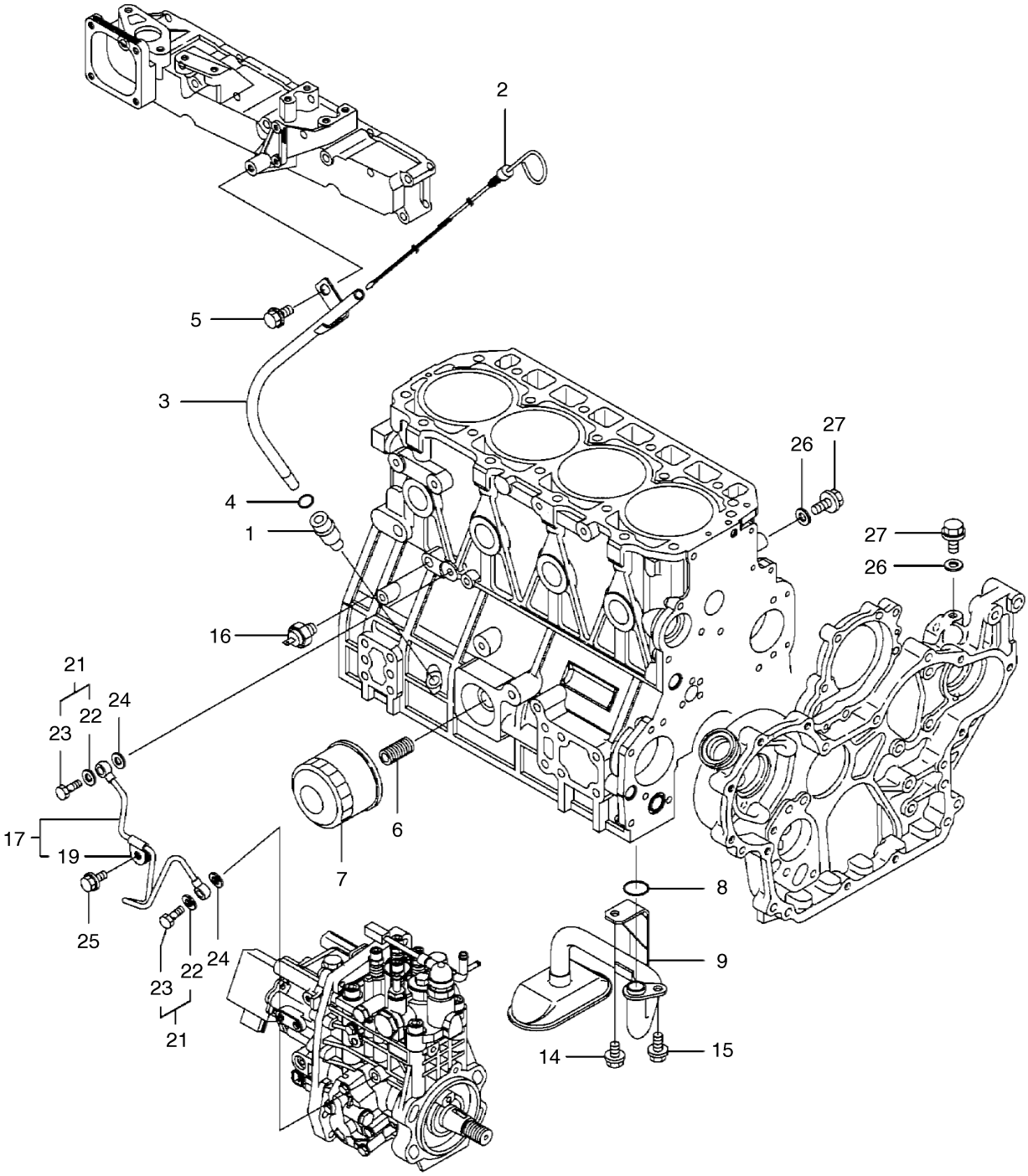

DOOSAN Doosan Infracore

Fig. 019 LUB.OIL SYSTEM

Key No	Part No	Description	Qty	S.C	Serial No	ICA	Replacable	Qty
1	K9006466	GUIDE;OIL GAUGE	1					
2	K9006467	GAUGE;OIL LEVEL	1					
3	K9006468	TUBE;DIPSTICK	1					
4	S8002700	O-RING	1					
5	2.120-00136	BOLT;PLATED M8X16	1					
6	D471165	STUD;OIL FILTER	1					
7	471-00123A	FILTER;OIL	1					
8	S8000201	O-RING	1					
9	K9005944	PIPE ASS'Y	1					
14	2.120-00143	BOLT M8X12	1					
15	2.120-00136	BOLT;PLATED M8X16	1					
16	A408117	SWITCH;OIL PRESS	1					
17	K9006096	OIL PIPE ASS'Y	1					
19	2.195-00046	SUPPORT;PIPE	1					
21	2.313-00001	BOLT ASS'Y;JOINT	2					
22	2.114-00889	WASHER;SEAL	2					
23	2.120-00258	BOLT;JOINT	2					
24	2.114-00889	WASHER;SEAL	2					
25	2.120-00143	BOLT M8X12	1					
26	2.114-00889	WASHER;SEAL	2					
27	2.120-00143	BOLT M8X12	2					

Thank you so much for reading.

Please click the “Buy Now!” button below to download the complete manual.

Buy Now

After you pay.

You can download the most perfect and complete manual in the world immediately.

Our support email:

ebooklibonline@outlook.com