9802/9800 R1-1-5 ENGINE, COMPLETE 100BHP RG BUILD

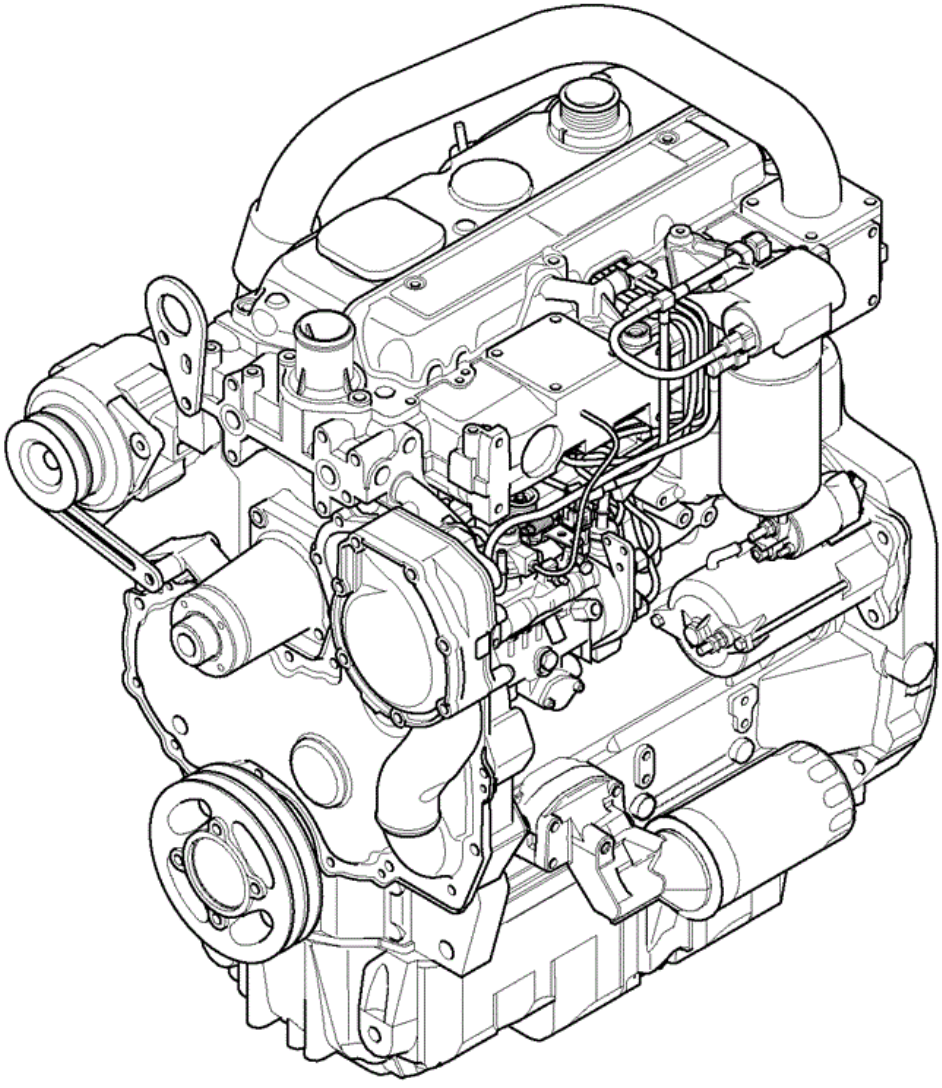

720290

Item	Part #	Change No	Description	Usage Code	QTY
1	01/145254		Engine complete, 1104C-44T turbo, 100bhp-75amp		1
2	01/145255		Engine complete, 1104C-44T turbo, 100bhp-85amp		1

9802/9800 R1-2-2 ENGINE SHORT RG BUILD

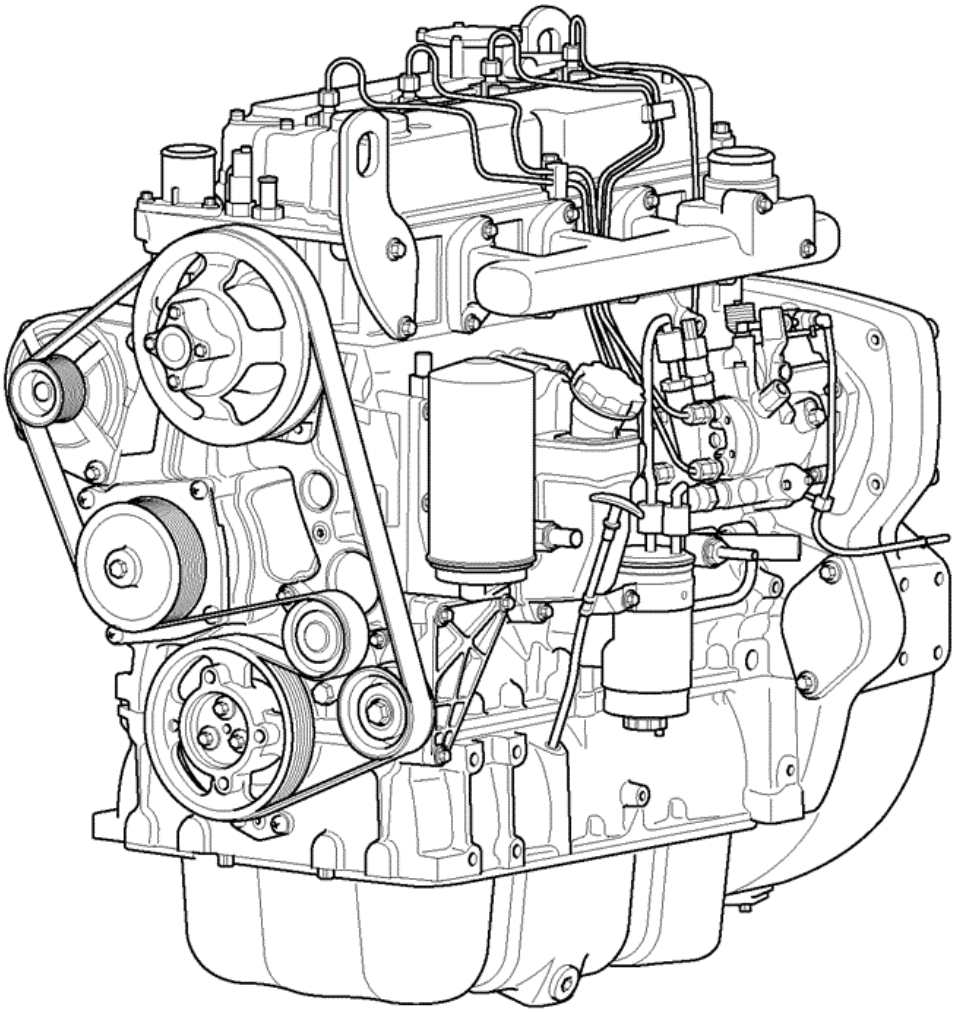

706301

Item	Part #	Change No	Description	Usage Code	QTY
1	02/203200		Engine short *Part NLA Please raise a Techweb call for correct replacement*		1

9802/9800 R1-3-2 BLOCK ASSEMBLY RG BUILD

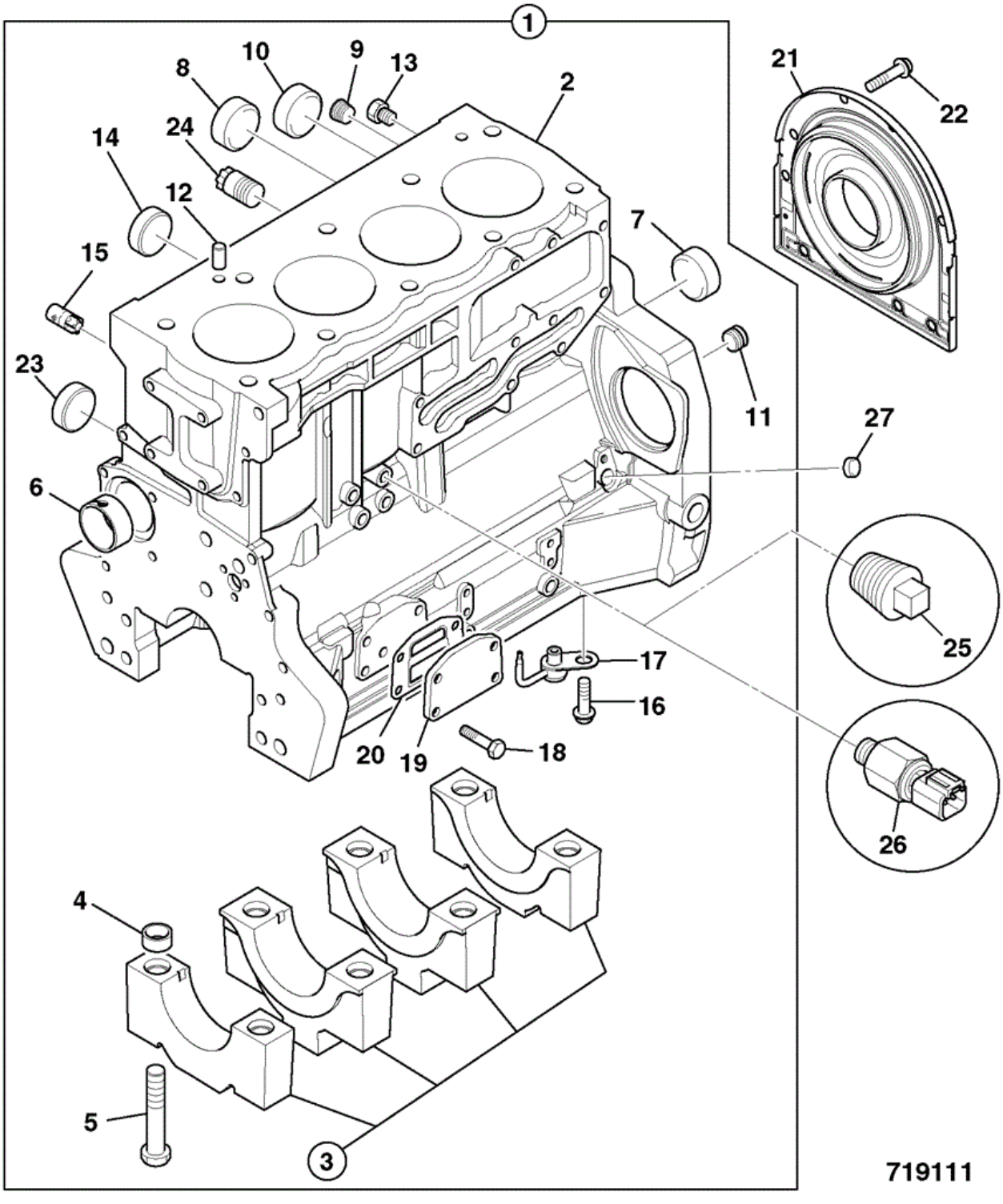

Item	Part #	Change No	Description	Usage Code	QTY
1	02/202900		Block cylinder assembly		1
2	****		None serviced part		1

3	****		None serviced part		1
4	:02/100101		Thimble		10
5	:02/100102		Bolt		10
6	:02/202901		Bush camshaft		1
7	:02/202902		Plug		1
8	:02/202903		Plug		2
9	:02/100134		Plug		1
10	:02/100396		Plug core D=32mm		1
11	:02/202904		Plug		1
12	:02/201818		Dowel		2
13	:02/202905		Plug		2
14	:02/202906		Plug		1
15	02/202907		Plug		1
16	:02/291178		Screw		4
17	:02/202908		Jet piston cooling		4
18	:02/291032		Bolt M8 x 20mm		4
19	:02/202909		Plate blanking		1
20	:02/202931		Gasket oil filter head to cyl/block		1
21	02/202935		Housing & rear oil seal assembly		1
22	826/10721		Bolt torx head drive		10
23	02/202961		Plug		1
24	02/202997		Plug		1
25	826/00765		Plug		1
26	701/80327		Switch Engine Oil Pressure		1
27	02/202961		Plug		1

9802/9800 R1-4-2 CRANKSHAFT, BEARINGS PISTONS & CON-RODS RG BUILD

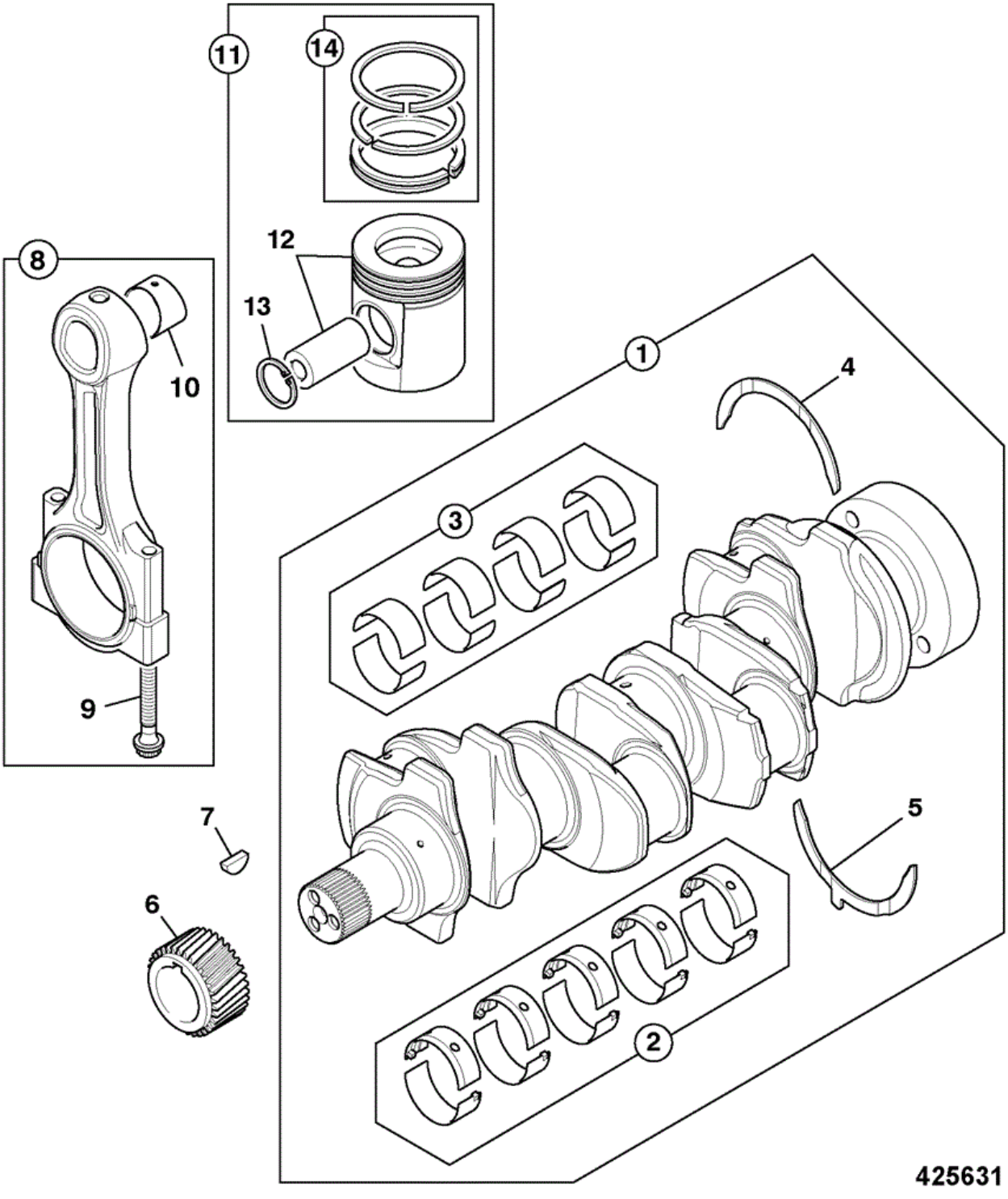

Item	Part #	Change No	Description	Usage Code	QTY
1	02/202910		Crankshaft assembly		1

2	:02/202911		Kit-main bearing standard		1
2	02/202912		Kit-main bearing u/s 0.25mm		0
2	02/202913		Kit-main bearing u/s 0.50mm		0
2	02/202914		Kit-main bearing undersize (+)0.030"		0
2A	02/203172		Kit-main bearing standard oversize		0
2A	02/203173		Kit-main bearing oversize - 0.25mm		0
2A	02/203174		Kit-main bearing oversize - 0.50mm		0
2A	02/203175		Kit-main bearing oversize - 0.75mm		0
3	:02/202915		Kit-big end bearing standard		1
3	02/202916		Kit-big end bearing oversize - (+)0.010"		0
3	02/202917		Kit-big end bearing u/s 0.50mm		0
3	02/202918		Kit-big end bearing oversize - (+)0.030"		1
3A	02/203251		Kit-big end bearing Standard		0
3A	02/203252		Kit-big end bearing undersize (-)0.010"		0
3A	02/203253		Kit-big end bearing undersize (-)0.020"		0
3A	02/203254		Kit-big end bearing undersize (-)0.030"		0
4	:02/192083		Washer thrust top - standard		2
4	02/192011		Washer thrust top-oversize 0.19mm		0
5	:02/192084		Washer thrust bottom - standard		2
5	02/192013		Washer thrust btm-oversize 0.19mm		0
6	02/202919		Gear crankshaft		1
7	02/100038		Key		1
8	02/202922		Kit-conrod grade 'F' RED		4
8	02/202923		Kit-conrod grade 'G' ORANGE		0
8	02/202924		Kit-conrod grade 'H' WHITE		0
8	02/202925		Kit-conrod grade 'J' GREEN		0
8	02/202926		Kit-conrod grade 'K' PURPLE		0
8	02/202927		Kit-conrod grade 'L' BLUE		0
9	:02/202929		Bolt conrod		2
10	:02/202928		Bush small end		1
11	02/202920		Kit-piston & rings		4
11	02/203221		Kit-piston & rings oversize 0.5mm		0
11	02/203223		Kit-piston & rings oversize 1.0mm		0
12	****		None serviced part		1
13	:02/201151		Circlip		2
14	:02/202921		Kit-piston ring		1

9802/9800 R1-5-7 FANS, PULLEYS & FAN BELT 4WS BUILD, 1.06:1 FAN SPEED, STANDARD

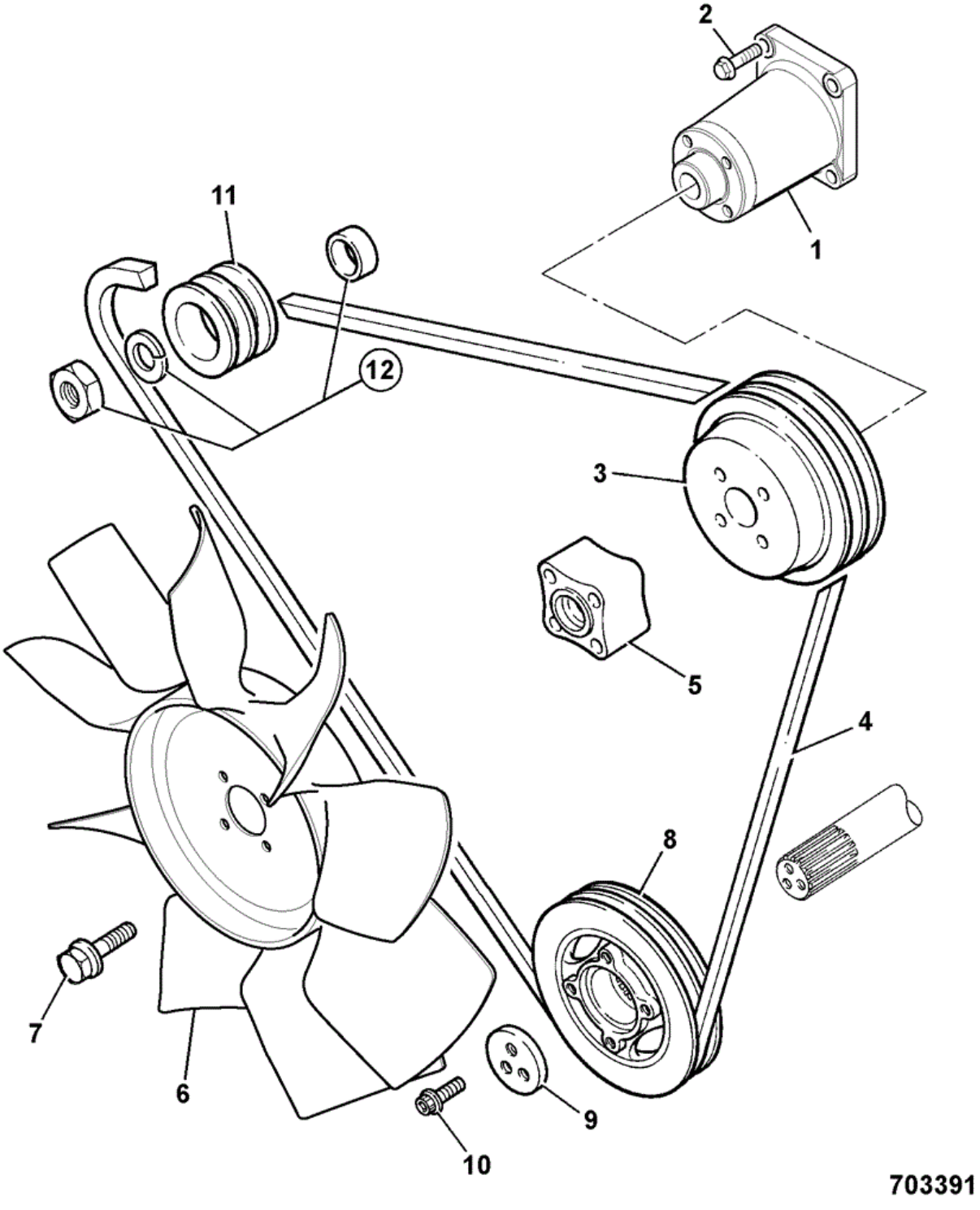

Item	Part #	Change No	Description	Usage Code	QTY
1	02/202962		Housing fan drive assembly		1

2	02/291096		Screw		4
3	02/201328		Pulley fan twin groove, 165mm		1
4	02/201366		Belt drive belt		1
5	02/100097		Spacer fan 50.8mm		1
6	30/925526		Fan D=20" Puller		1
7	1315/3317Z		Bolt M8 x75 mm		4
8	02/200877		Pulley crankshaft twin groove		1
9	02/200017		Block Thrust		1
10	02/100579		Screw		3
11	02/202444		Pulley alternator D=73mm twin groove		1
12	714/20405		Kit-sundry parts		1

9802/9800 R1-6-2 TIMING CASE CAMSHAFT & GEARS RG BUILD

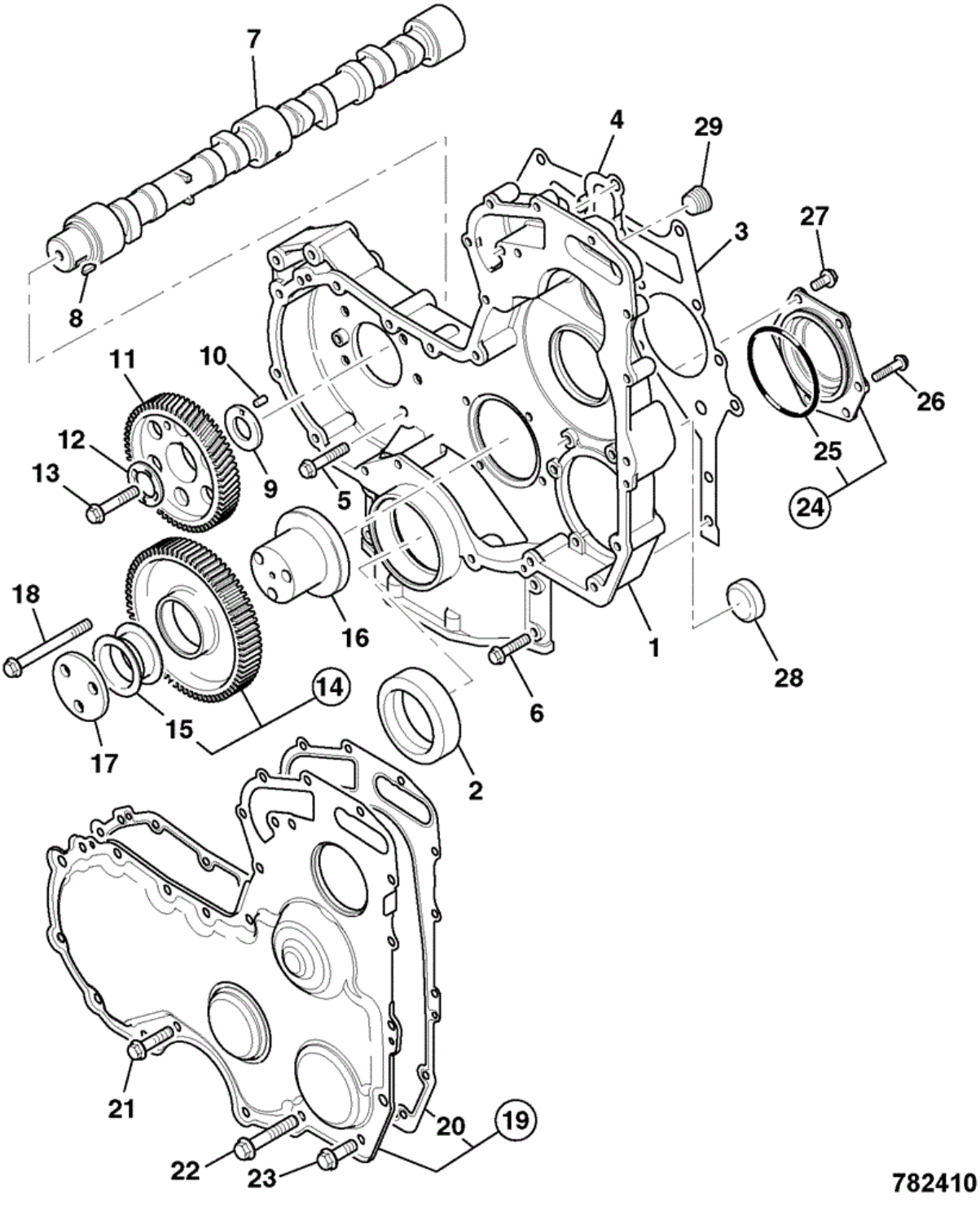

Item	Part #	Change No	Description	Usage Code	QTY
1	02/203050		Casing timing		1

2	02/101435		Seal front oil		1
3	02/202984		Gasket timing case to block		1
4	02/202983		Gasket timing case		1
5	826/00869		Screw flange head		8
6	02/291033		Bolt		4
7	02/203075		Camshaft		1
8	02/100038		Key		1
9	02/291065		Washer		1
10	2102/0604		Dowel		1
11	02/203049		Gear camshaft		1
12	02/203047		Washer thrust		1
13	02/291196		Screw		1
14	02/203110		Gear idler		1
15	:02/192016		Bush		2
16	02/100041		Hub		1
17	02/201288		Plate		1
18	02/291073		Screw		3
19	:02/202993		Cover timing		1
20	:02/202994		Gasket timing cover		1
21	02/291016		Screw		9
22	02/291025		Bolt (M8 x 65)		5
23	826/00901		Screw		1
24	02/202995		Plate blanking		1
25	:02/202996		O Ring		1
26	02/291031		Bolt		5
27	826/00901		Screw		1
28	02/203121		Plug D=36mm		1
29	02/100095		Plug taper		1

9802/9800 R1-7-2 FLYWHEEL & STARTER RING GEAR RG BUILD

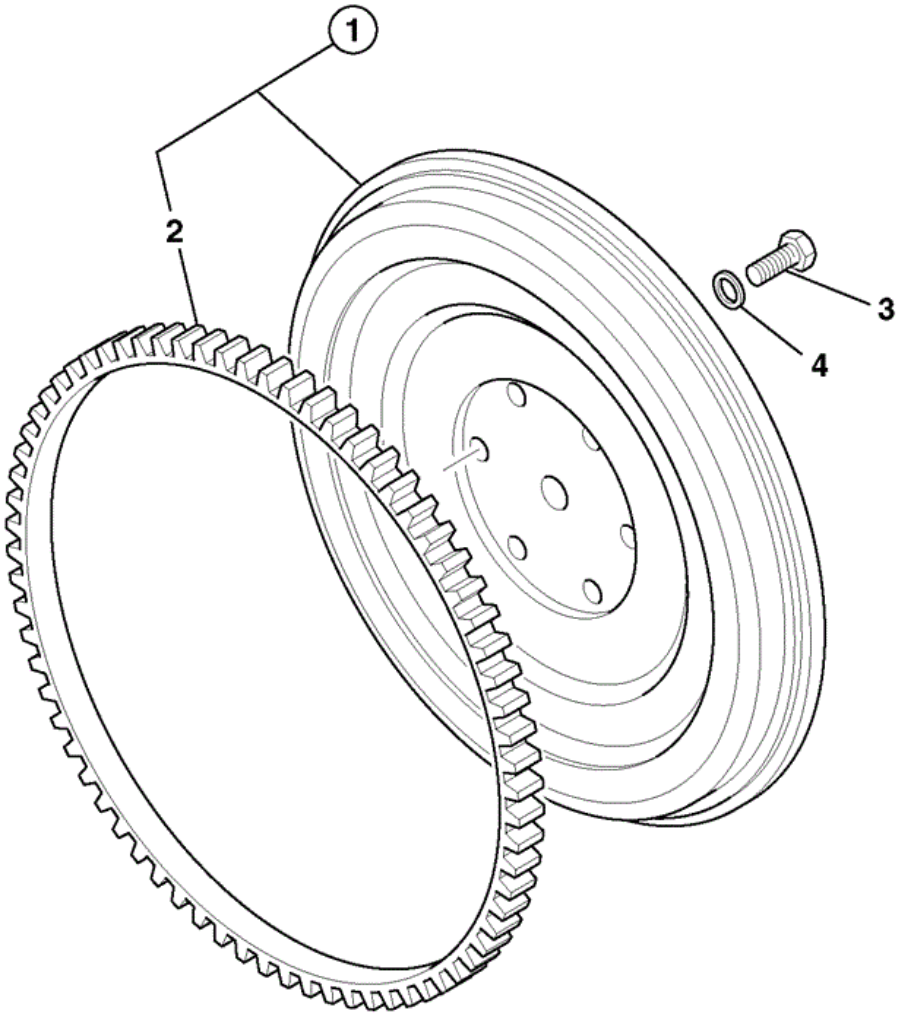

425660

Item	Part #	Change No	Description	Usage Code	QTY
1	02/203181		Flywheel assembly		1

2	:02/100078		Gear starter ring		1
3	1305/0409		Bolt 1/2UNF		10
4	02/200725		Washer		10

9802/9800 R1-8-2 ENGINE MOUNTINGS AWS

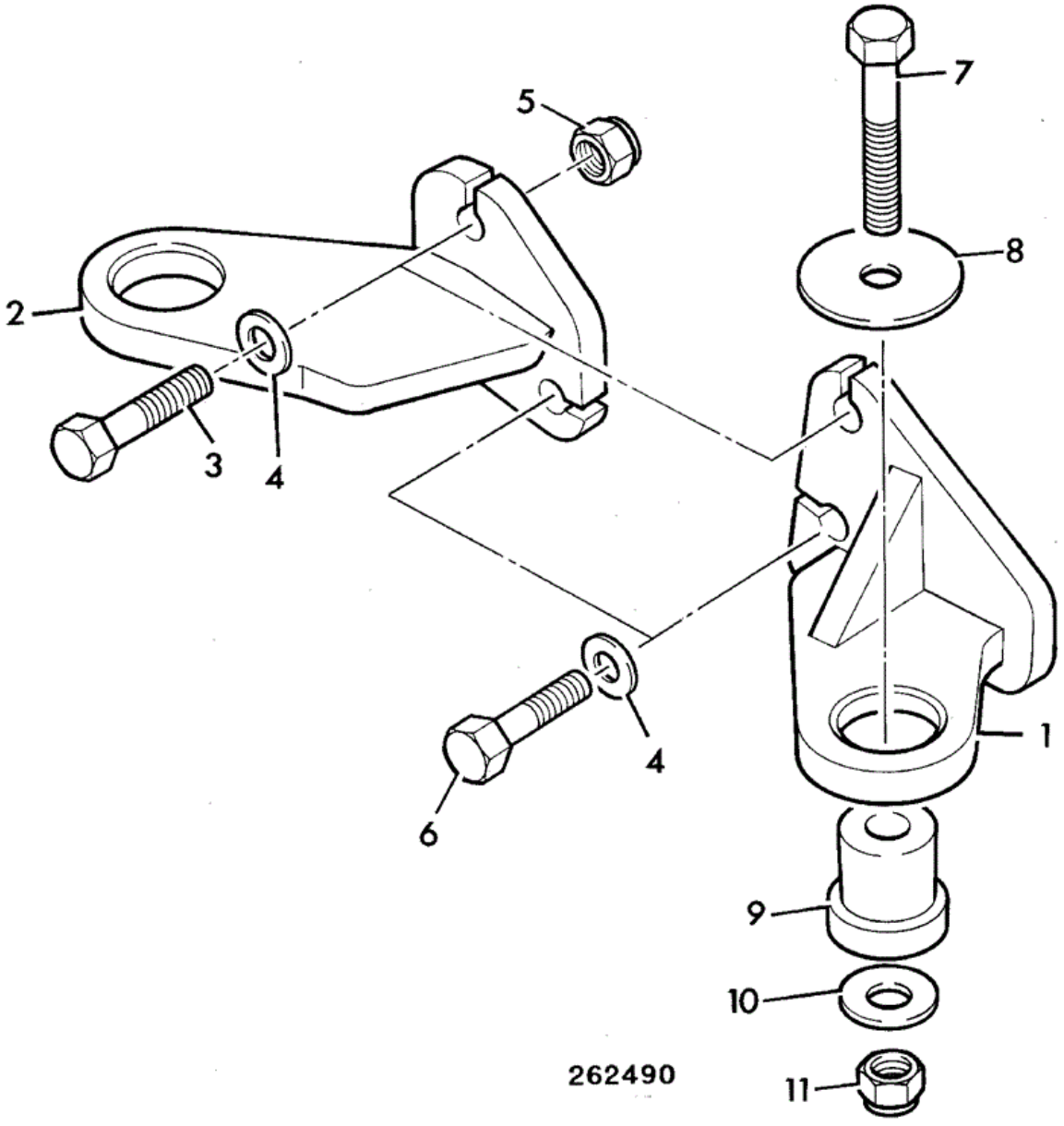

Item	Part #	Change No	Description	Usage Code	QTY
1	125/00204		Bracket engine mounting left hand		1
2	125/00205		Bracket engine mounting right hand		1

3	1315/3717Z		Bolt M16 x 75mm		2
4	1370/0603Z		Nut lock M16		2
5	1420/0011Z		Washer (M16)		4
6	1315/0710Z		Setscrew		2
7	1315/3519Z		Bolt M12x90mm		2
8	123/02453		Washer Rebound (13.5mm x 65mm x 5mm)		2
9	123/03138		Mounting rubber		2
10	823/00531		Washer		2
11	1370/0403Z		Nut Lock, M12		2

9802/9800 R2-1-2 CYLINDER HEAD RG BUILD

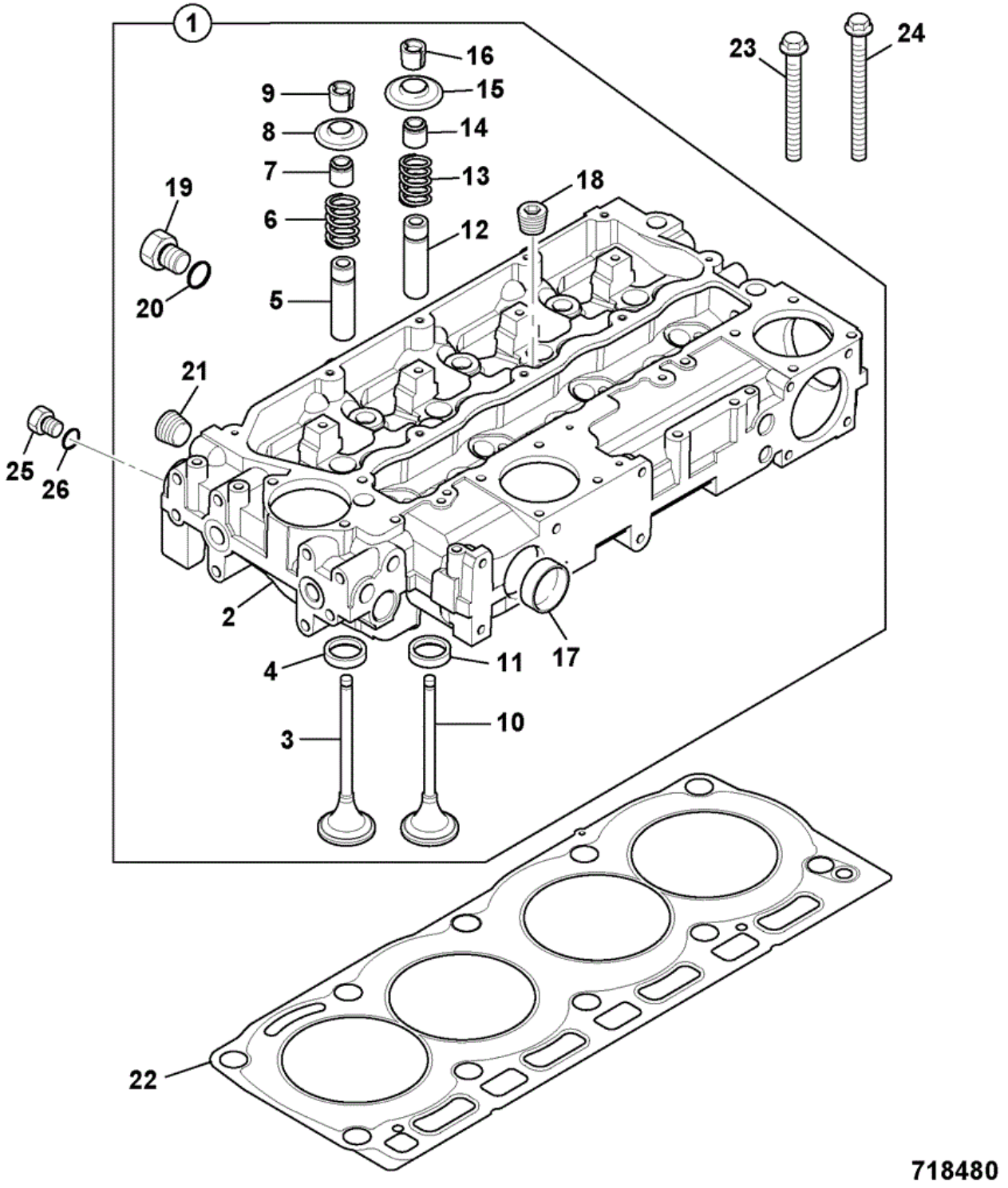

Item	Part #	Change No	Description	Usage Code	QTY
1	02/202940		Head cylinder assembly		1
2	****		None serviced part		1

3	:02/202941		Valve inlet		4
4	:02/202938		Insert inlet valve		4
5	:02/201812		Guide valve		4
6	:02/202934		Spring valve		4
7	:02/202936		Seal valve stem brown		4
8	:02/202937		Cap valve		4
9	:02/201515		Collet		8
10	:02/202942		Valve exhaust		4
11	:02/202939		Insert exhaust valve		4
12	:02/201812		Guide valve		4
13	:02/202934		Spring valve		4
14	:02/202936		Seal valve stem brown		4
15	:02/202937		Cap valve		4
16	:02/201515		Collet		8
17	:02/100107		Plug core D=50mm		2
18	:02/100134		Plug		4
19	:02/202943		Plug		1
20	:02/202944		O Ring		1
21	:02/100095		Plug taper		2
22	02/203147		Gasket cylinder head		1
23	02/202946		Bolt cylinder head		7
24	02/202947		Bolt cylinder head		3
25	02/202943		Plug		1
26	02/202944		O Ring		1

9802/9800 R2-2-2 ROCKER ASSEMBLY PUSH RODS & TAPPETS RG BUILDS

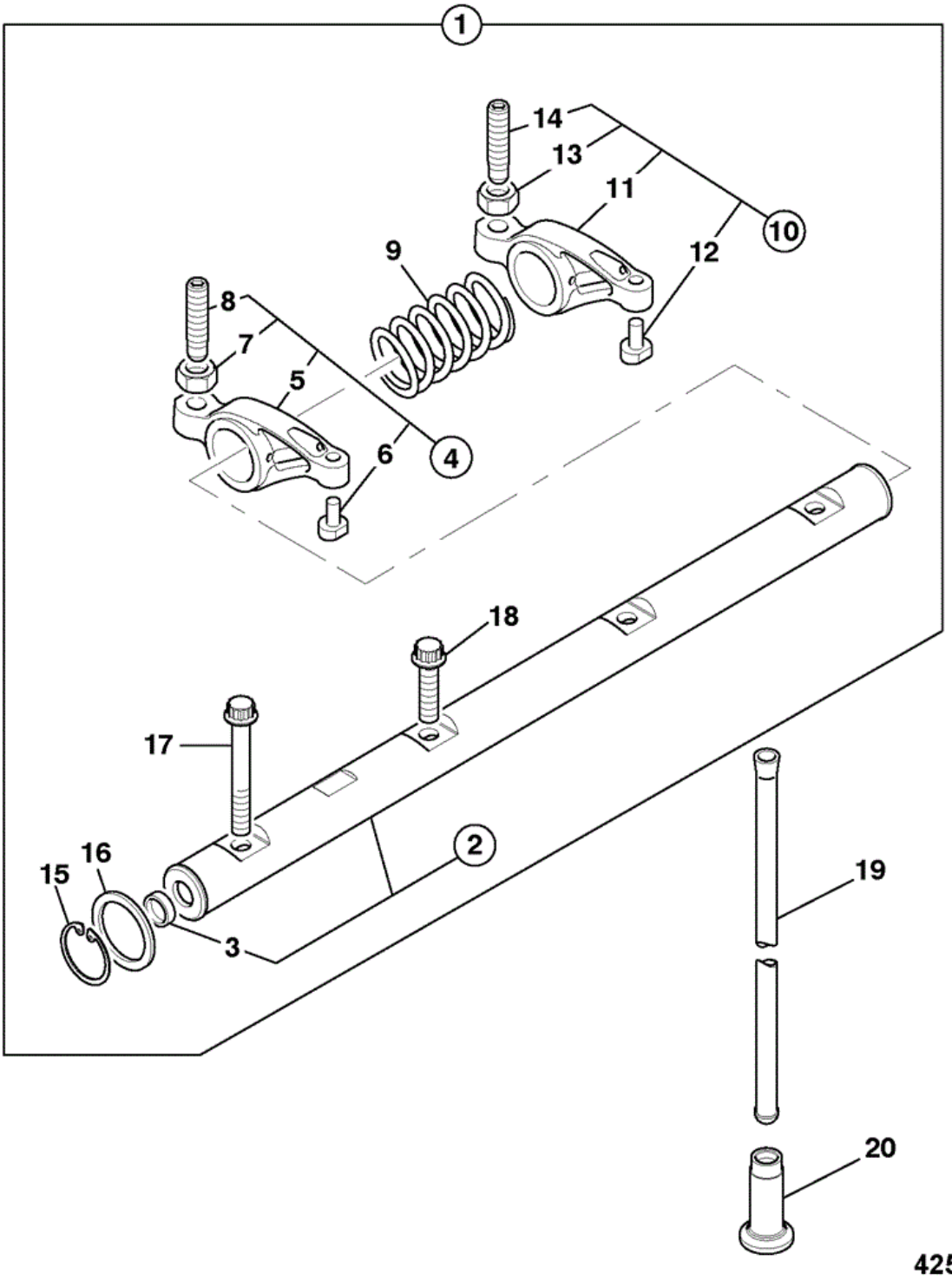

Item	Part #	Change No	Description	Usage Code	QTY
1	02/202950		Shaft rocker assembly		1

Thank you so much for reading.

Please click the “Buy Now!” button below to download the complete manual.

Buy Now

After you pay.

You can download the most perfect and complete manual in the world immediately.

Our support email:

ebooklibonline@outlook.com