SERVICE PARTS CATALOGUE

CATALOGO PARTI DI RICAMBIO

CATALOGUE DES PIECES DE TACHEES

ERSATZTEILK ATALOG

CATALOGO DE PIEZAS DE REPUES TO

CATALOGO DE PECAS SOBRESSALENTES

RESERVEDELSKATALOG

ONDERDELENLIJST

Mini Crawler Excavators E16B

Print No. 87743895

NEW HOLLAND
CONSTRUCTION

SECTION INDEX
General

0 - VERSION	00	IDENTIFICATION AND VERSION LIST
0.000	00	MAINTENANCE PARTS
0.000	01	ENGINE INSTALLATIONS
0.001	01	AIR CLEANER
0.001	02	AIR CLEANER
0.002	01	MUFFLER
0.003	01	RADIATOR
0.003	02	RADIATOR
0.003	03	RADIATOR - COMPONENTS
0.003	04	RADIATOR - COMPONENTS
0.004	01	ENGINE ACCELERATOR CONTROLS
0.004	02	ENGINE ACCELERATOR CONTROLS
0.021	01	ENGINE - DIESEL
0.021	02	GASKET SET
0.040	01	CRANKCASE
0.040	02	CRANKCASE
0.042	01	OIL SUMP
0.042	02	OIL SUMP
0.043	01	CRANKCASE COVERS
0.060	01	CYLINDER HEAD
0.060	02	ROCKER COVER
0.060	03	ROCKER COVER
0.071	01	MANIFOLDS
0.080	01	CRANKSHAFT
0.081	01	CONNECTING ROD
0.082	01	PISTONS
0.083	01	FLYWHEEL PLATE
0.083	02	FLYWHEEL
0.100	01	FUEL INJECTION PUMP DRIVE
0.120	01	VALVE MECHANISM
0.120	02	CAMSHAFT
0.140	01	FUEL INJECTION PUMP
0.140	02	INJECTION PUMP - CONTROL
0.140	03	GOVERNOR PARTS
0.149	01	INJECTION EQUIPMENT - PIPING
0.149	02	INJECTION EQUIPMENT - PIPING
0.149	03	INJECTION EQUIPMENT - PIPING
0.200	01	WATER SEPARATOR
0.200	02	FUEL FILTER
0.201	01	FUEL PUMP
0.270	01	OIL FILTERS - ENGINE
0.302	01	OIL FILTERS - ENGINE
0.302	02	OIL FILTERS - ENGINE
0.320	01	WATER PUMP
0.323	01	WATER PUMP
0.323	02	WATER PUMP
0.326	01	THERMOSTAT
0.326	02	PREHEATING
0.347	01	FAN & BELT
0.347	02	FAN & BELT
0.360	01	STARTER MOTOR
0.360	02	STARTER MOTOR
0.380	01	PREHEATING LAMP
0.380	02	RELAY
0.380	03	SPEED CONTROL

SECTION INDEX
General

0.400	01	ALTERNATOR
0.400	02	ALTERNATOR
0.450	01	HOOKS - ENGINE

ENGINE INSTALLATIONS
INSTALLAZIONE MOTORE
MOTORANLAGE
INSTALLATIONS DU MOTEUR

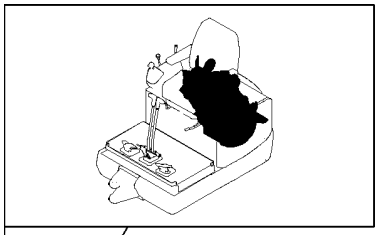

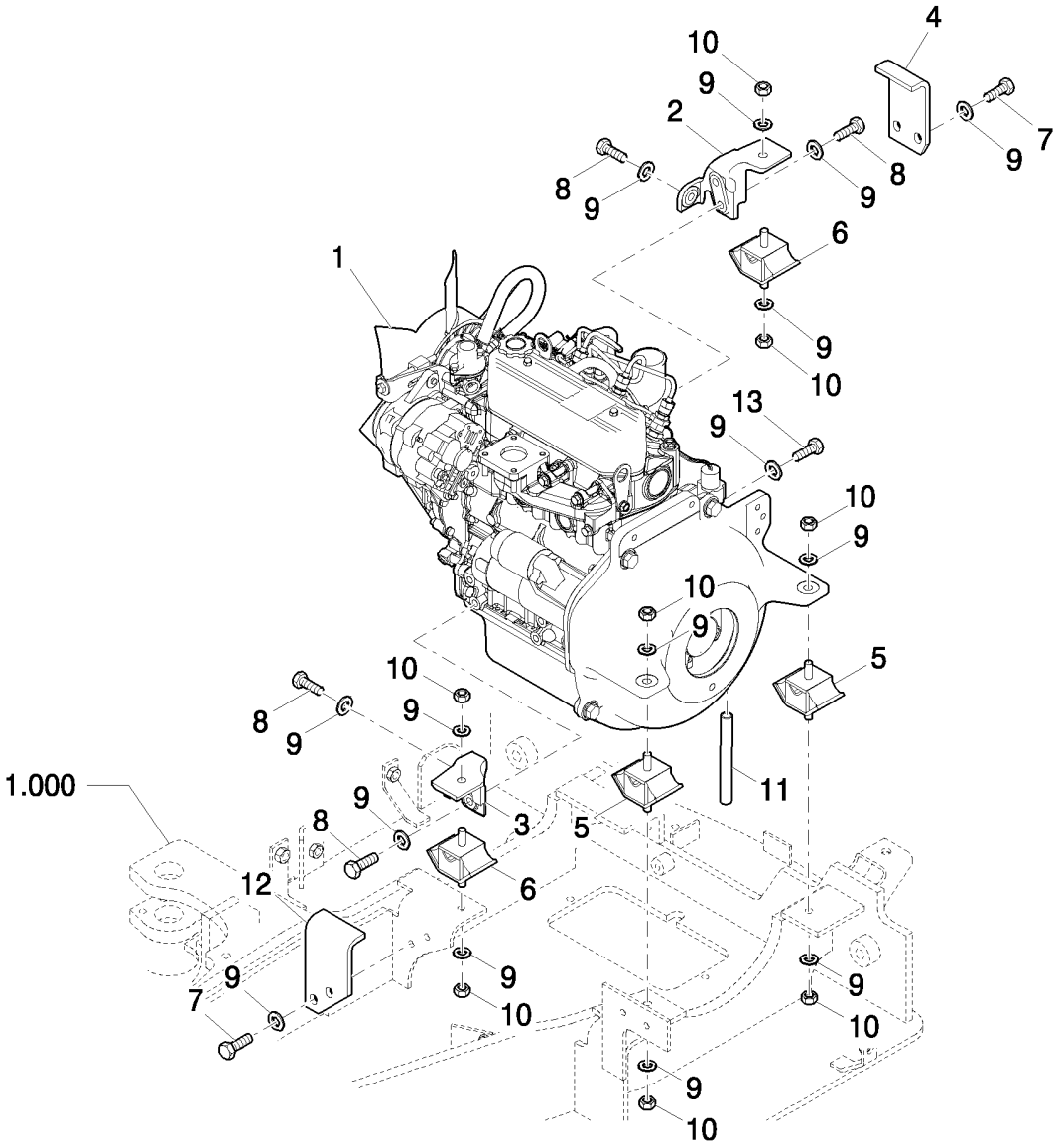

INSTALACIÓN MOTOR
ENGINE INSTALLATIONS
ENGINE INSTALLATIONS
ENGINE INSTALLATIONS

R	N	P.N.	MOD	Q	Description Denominacion	Descrizione Beskrivelse	Bezeichnung Denominação	Description Beschrijving	L.C.
1	1	87555573		1	ENGINE MOTOR	MOTORE MOTOR	MOTOR MOTOR	MOTEUR MOTOR	130M
2		87555533		1	BRACKET PIEZA DE SOPORTE	STAFFA BESLAG	KONSOLE(1) BRACADEIRA	PATTE FIXATION STEUNBEUGEL	225S
3		87555534		1	BRACKET PIEZA DE SOPORTE	STAFFA BESLAG	KONSOLE(1) BRACADEIRA	PATTE FIXATION STEUNBEUGEL	225S
4		87555532		1	BRACKET PIEZA DE SOPORTE	STAFFA BESLAG	KONSOLE(1) BRACADEIRA	PATTE FIXATION STEUNBEUGEL	225S
5		87555531		2	MOUNT, RUBBER TEJUELO, GOMA	SUPPORTO, DI GOMMA MONTERINGSGUMMIBØ	GUMMIHALTERUNG MONTAGEM DE BORRA(	PALIER CAOUTCHOUC BEVESTIGING, RUBBER	P777
6		72271561		2	DAMPER ANTIVIBRADOR	SMORZATORE SVINGNINGSDAEMPER	DÄMPFER ANTIVIBRADOR	AMORTISSEUR VIBRATI TRILLINGSDEMPER	164S
7		11106234		4	BOLT, Hex, M10 x 25, 10.9, Full Thd TORNILLO	BULLONE SKRUE	SCHRAUBE PARAFUSO	BOULON BOUT	140B
8		15970734		6	BOLT, Hex, M10 x 1.25 x 25, 10.9, Full Thd TORNILLO	BULLONE SKRUE	SCHRAUBE PARAFUSO	BOULON BOUT	140B
9		14496631		20	WASHER, M10 x 21 x 2 ARANDELA	ROSETTA PIANA FLADSKIVE	UNTERLEGSCHEIBE ANILHA	RONDELLE SLUITRING	131R
10		11701721		8	NUT, M10, Cl 10 TUERCA	DADO MOETRIK	MUTTER PORCA	ECROU MOER	010D
11		87555529		1	HOSE MANGA	MANICOTTO FLESSIBILE SLANGE	SCHLAUCH TUBO FLEXIVEL	FLEXIBLE FLEXIBELE BUIS	030M
12		87595361		1	BRACKET PIEZA DE SOPORTE	STAFFA BESLAG	KONSOLE(1) BRACADEIRA	PATTE FIXATION STEUNBEUGEL	225S
13		15970534		2	BOLT, Hex, M10 x 1.25 x 20, 10.9, Full Thd TORNILLO	BULLONE SKRUE	SCHRAUBE PARAFUSO	BOULON BOUT	140B

(1) See Sgr. 0.021

0.001	01	p1	12/07

AIR CLEANER
FILTRO ARIA
LUFTFILTER
FILTRE A AIR

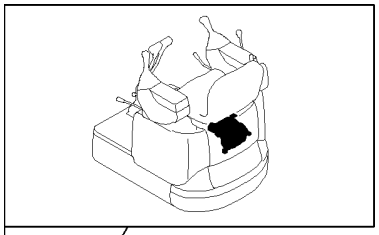

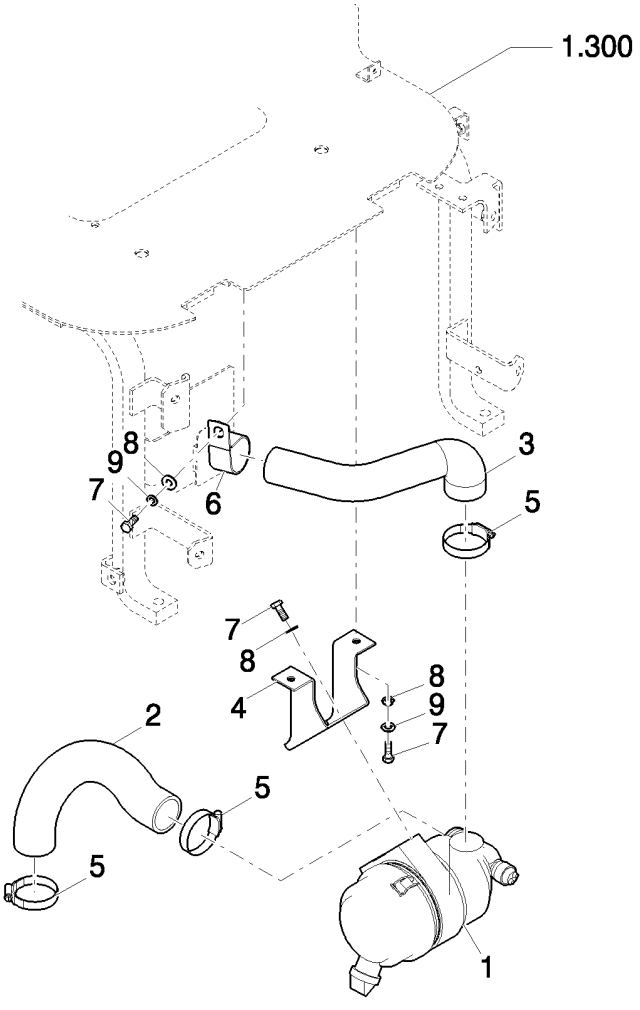

FILTRO DE AIRE
AIR CLEANER
AIR CLEANER
AIR CLEANER

R	N	P.N.	MOD	Q	Description Denominacion	Descrizione Beskrivelse	Bezeichnung Denominação	Description Beschrijving	L.C.
1	1	87595309		1	AIR CLEANER DEPURADOR	DEPURATORE LUFTFILTER	LUFTFILTER DEPURADOR	FILTER A AIR LUCHTREINIGER	021D
2		87550358		1	HOSE, LARGE Manguito	TUBO FLESSIBILE,GRDE SLANGE, STOR	SCHLAUCH, GROSS MANGOTE	Durite SLANG, GROOT	Z336
3		87550359		1	HOSE, LARGE Manguito	TUBO FLESSIBILE,GRDE SLANGE, STOR	SCHLAUCH, GROSS MANGOTE	Durite SLANG, GROOT	Z336
4		87550360		1	BRACKET PIEZA DE SOPORTE	STAFFA BESLAG	KONSOLE BRACADEIRA	PATTE FIXATION STEUNBEUGEL	225S
5		87526523		3	CLAMP COLLAR	MORSETTO CLAMP	SCHELLE BRACADEIRA	COLLIER CLAMP	1640
6		71438664		1	CLIP SUJETADOR	FERMAGLIO KLIPS	KLEMME FIXADOR	CLIP KLEM	045F
7		16043434		5	BOLT, Hex, M8 x 20, 10.9, Full Thd TORNILLO	BULLONE SKRUE	SCHRAUBE PARAFUSO	BOULON BOUT	140B
8		14496531		5	WASHER, M8 x 17 x 1.6 ARANDELA	ROSETTA PIANA FLADSKIVE	UNTERLEGSCHEIBE ANILHA	RONDELLE SLUITRING	131R
9		10516674		3	WASHER, LOCK, 5/16" ARANDELA DE FRENO	ROSETTA DI SICUREZZA LAASESKIVE	SICHERUNGSSCHEIBE ANILHA DE FIXACAO	RONDELLE FREIN VEERRING	132R

(1) See Page 0.001 02

AIR CLEANER
FILTRO ARIA
LUFTFILTER
FILTRE A AIR

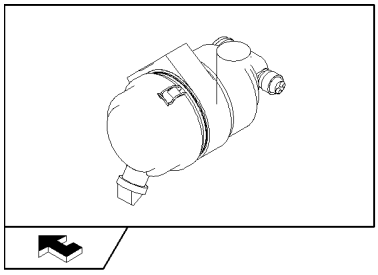

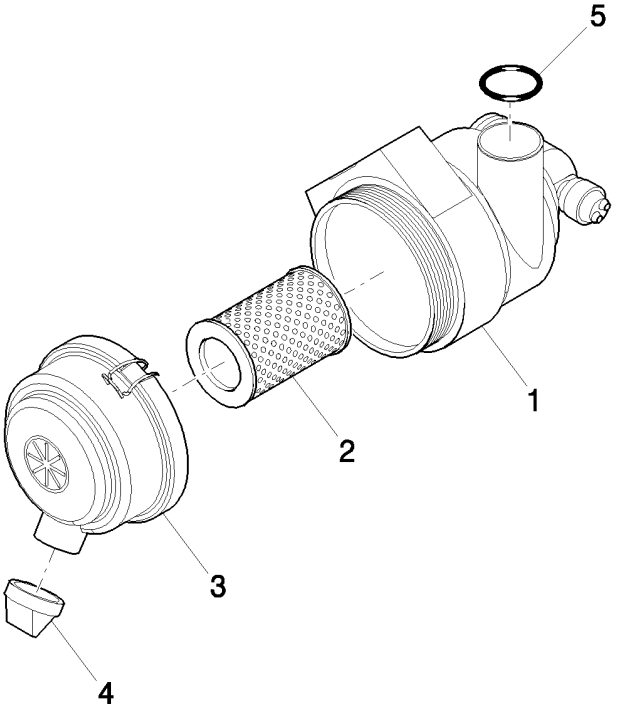

FILTRO DE AIRE
AIR CLEANER
AIR CLEANER
AIR CLEANER

R	N	P.N.	MOD	Q	Description Denominacion	Descrizione Beskrivelse	Bezeichnung Denominação	Description Beschrijving	L.C.
1		PU11P00004S001		1	BODY CUERPO	CORPO HUS	KOERPER CORPO	CORPS LICHAAM	300C
2		PM11P00006S002		1	FILTER, ELEMENT ELEMENTO DE FILTRAD	ELEMENTO DEL FILTRO FILTERELEMENT	FILTERELEMENT ELEMENTO DE FILTRO	ELÉMENT FILTRANT FILTERELEMENT	020E
3		PM11P00006S003		1	COVER ASSY TABA (CONJUNTO)	COPERCHIO, COMPL COVER ASSY	DECKEL (KPLT.) TAMPA CONJUNTO	COUVERCLE (ASSEMBL COVER ASSY	P426
4		2446U242S4		1	VALVE VALVULA	VALVOLA VENTIL	VENTIL VALVULA	SOUPAPE KLEP	9620
5		PM11P00006S005		1	O-RING JUNTA HERMETICA	ANELLO TOROIDALE O-RING	O-RING O-RING	JOINT THORIQUE O-RING	055A

AIR CLEANER ASSY P/N 87595309

E16B

MUFFLER
SILENZIATORE
SCHALLDAEMPFER
SILENCIEUX

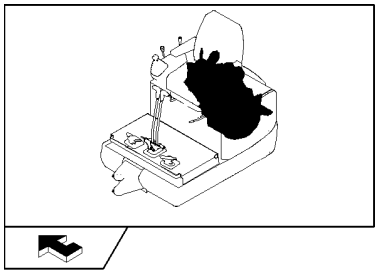

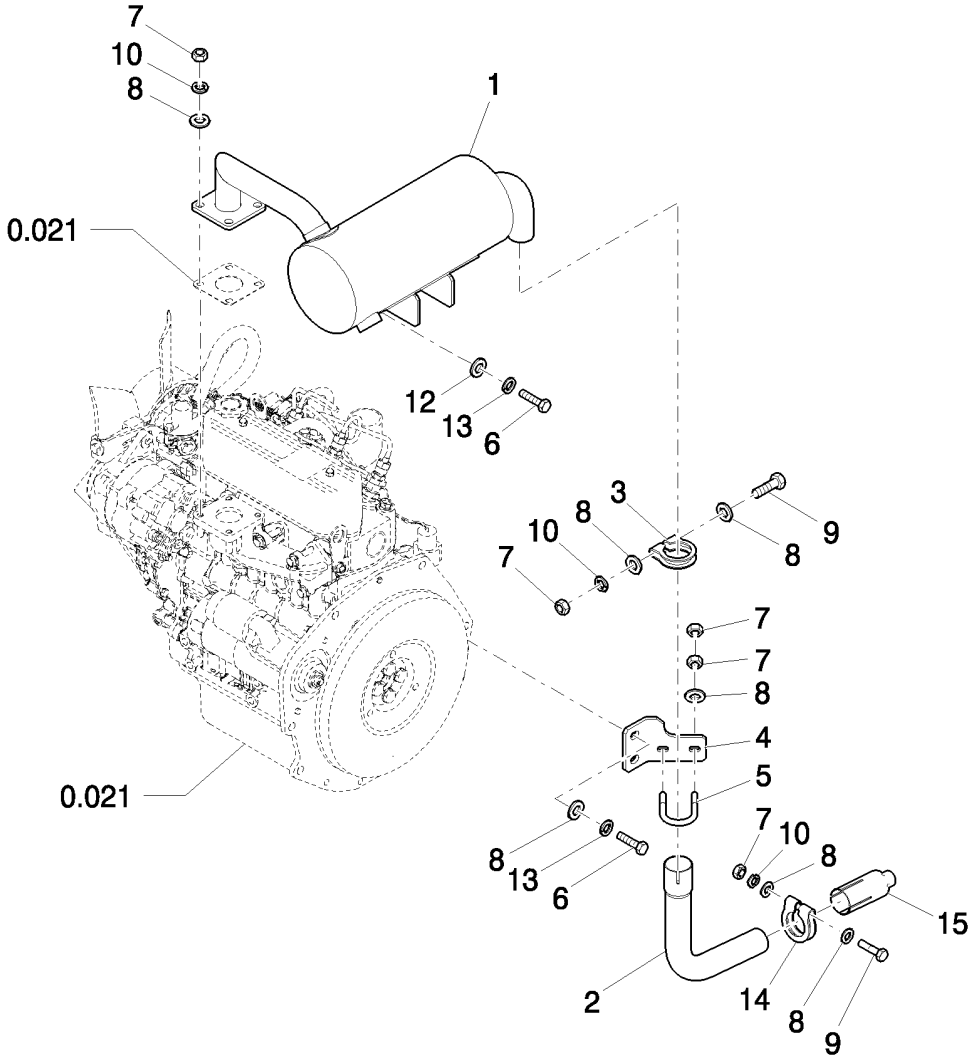

Thank you so much for reading.

Please click the “Buy Now!” button below to download the complete manual.

Buy Now

After you pay.

You can download the most perfect and complete manual in the world immediately.

Our support email:

ebooklibonline@outlook.com