JOHN DEERE
AG & TURF DIVISION

John Deere Select Series
X500 Multi-Terrain Series Tractors

OMM167794 H2

OPERATOR'S MANUAL

JOHN DEERE

Export Version
Printed in U.S.A.

Introduction

Thank You for Purchasing a John Deere Product

We appreciate having you as a customer and wish you many years of safe and satisfied use of your machine.

Using Your Operator's Manual

This manual is an important part of your machine and should remain with the machine when you sell it.

Reading your operator's manual will help you and others avoid personal injury or damage to the machine. Information given in this manual will provide the operator with the safest and most effective use of the machine. Knowing how to operate this machine safely and correctly will allow you to train others who may operate this machine.

If you have an attachment, use the safety and operating information in the attachment operator's manual along with the machine operator's manual to operate the attachment safely and correctly.

This manual and safety signs on your machine may also be available in other languages (see your authorized dealer to order).

Sections in your operator's manual are placed in a specific order to help you understand all the safety messages and learn the controls so you can operate this machine safely. You can also use this manual to answer any specific operating or servicing questions. A convenient index located at the end of this book will help you to find needed information quickly.

The machine shown in this manual may differ slightly from your machine, but will be similar enough to help you understand our instructions.

RIGHT-HAND and LEFT-HAND sides are determined by facing in the direction the machine will travel when going forward. When you see a broken line (------), the item referred to is hidden from view.

Before delivering this machine, your dealer performed a predelivery inspection to ensure best performance.

Machine Use

This machine is designed solely for use in customary lawn mowing operations, for park and amenity area maintenance and for winter work. Use in any other way is considered as contrary to the intended use.

This machine is not intended for use in forestry operations. The operator station does not provide adequate protection to the occupants in that environment.

The cab available from the manufacturer is not designed to provide adequate protection from hazardous substances. The operator must wear appropriate personal protection equipment.

The manufacturer accepts no liability for damage or injury resulting from this misuse, and these risks must be borne solely by the user. Compliance with and strict adherence to the conditions of operation, service and repair as specified by the manufacturer also constitute essential elements for the intended use.

This machine should be operated, serviced and repaired only by persons familiar with all its particular characteristics and acquainted with the relevant safety rules (accident prevention). The accident prevention regulations, all other generally recognized regulations on safety and occupational medicine and the road traffic regulations must be observed at all times.

Setting fuel delivery beyond published factory specifications or otherwise overpowering will result in loss of warranty protection for this machine.

Any arbitrary modifications carried out on this machine will relieve the manufacturer of all liability for any resulting damage or injury.

Special Messages

Your manual contains special messages to bring attention to potential safety concerns, machine damage as well as helpful operating and servicing information. Please read all the information carefully to avoid injury and machine damage.

CAUTION: Avoid injury! This symbol and text highlight potential hazards or death to the operator or bystanders that may occur if the hazards or procedures are ignored.

IMPORTANT: Avoid damage! This text is used to tell the operator of actions or conditions that might result in damage to the machine.

NOTE: General information is given throughout the manual that may help the operator in the operation or service of the machine.

Record Identification Numbers

John Deere Select Series™ - X500 Multi-Terrain™ Tractors

PIN (080001-)

If you need to contact an Authorized Service Center for information on servicing, always provide the product model and identification numbers.

You will need to locate the model and serial number for the machine and for the engine of your machine and record the information in the spaces provided below.

DATE OF PURCHASE:

_____

DEALER NAME:

_____

DEALER PHONE:

_____

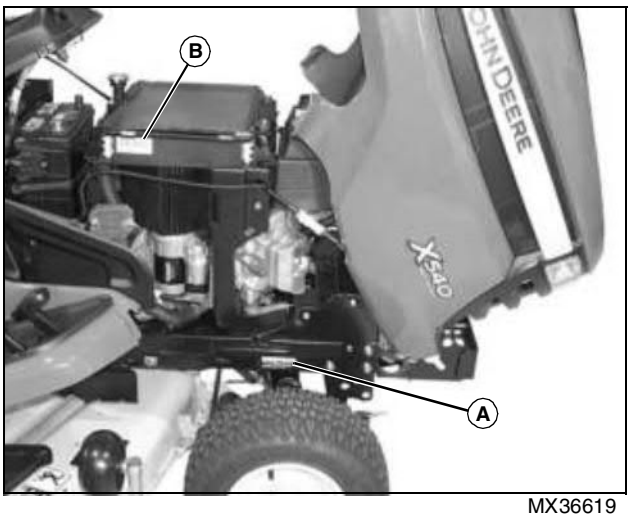

MX36619

Picture Note: X540 engine serial number shown.

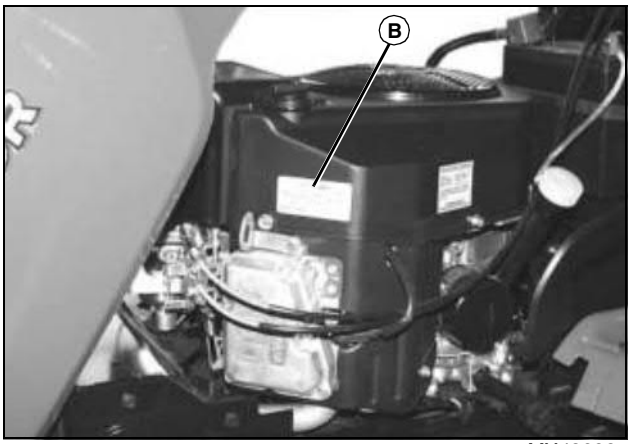

MX43928

Picture Note: X500, X530, and X534 engine serial number location shown.

PRODUCT IDENTIFICATION NUMBER (A):

— — — — — — — — — — — — — — — — — —

ENGINE SERIAL NUMBER (B):

— — — — — — — — — — — — — — — — — —

Table of Contents

Safety Labels 1
Safety 5
Machine Cleanout 13
Operating - Controls 16
Operating 17
Replacement Parts 32
Service Intervals 33
Service Lubrication 34
Service Engine 36
Service Transmission 46
Service Mower 49
Service Electrical 56
Service Miscellaneous 59
Troubleshooting 64
Storage 68
Assembly 70
Specifications 72
Declaration of Conformity 77
Declaration of Conformity 79
Index 81

Original Instruction

All information, illustrations and specifications in this manual are based on the latest information at the time of publication. The right is reserved to make changes at any time without notice.

OMM167794 H2 - English

Pictorial Safety Label Location

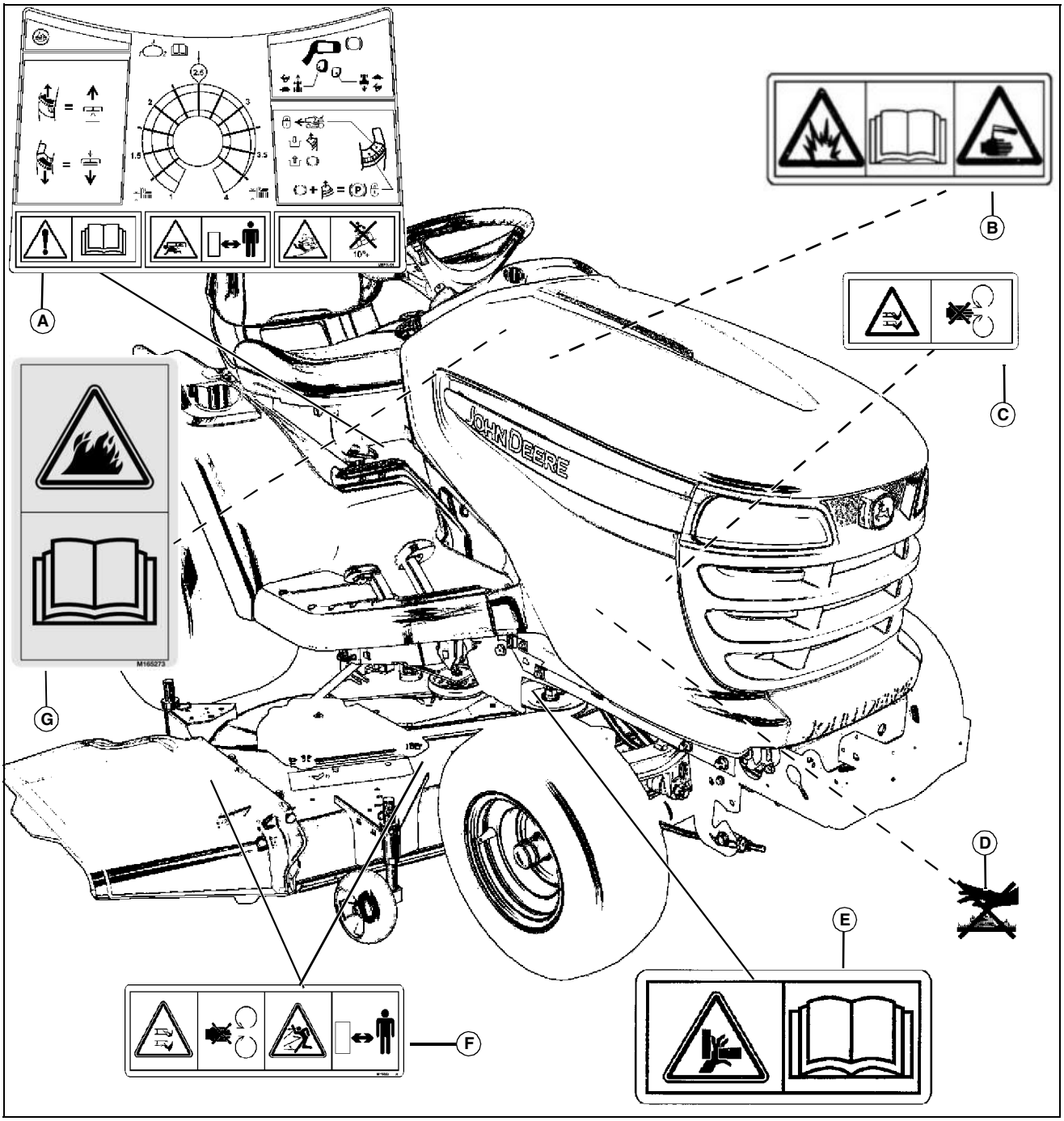

MX42022

Picture Note: Use label number listed in table below to locate complete text of safety label message following this illustration.

Pictorial labels are required for certain parts of the world. Your machine may not be equipped with these labels.

A - DANGER M168854

B - DANGER M133159 (ON BATTERY)

C - WARNING M118041

D - CAUTION (MOLDED INTO MUFFLER)

E - WARNING M133166

F - DANGER M118040

G - CAUTION M165273

Thank you so much for reading.

Please click the “Buy Now!” button below to download the complete manual.

Buy Now

After you pay.

You can download the most perfect and complete manual in the world immediately.

Our support email:

ebooklibonline@outlook.com