# FARMALL® 30C
# FARMALL® 35C
## Compact Tractor

# OPERATOR'S MANUAL

**Part number 47578253**
1st edition English
January 2014

CASE IH AGRICULTURE

# Contents


## 1 GENERAL INFORMATION

Note to the Owner ..... 1-1
Biodiesel fuel ..... 1-2
Tractor intended use ..... 1-3
Electro-magnetic compatibility (EMC) ..... 1-4
Product identification ..... 1-5
Operator's manual storage ..... 1-6
Machine orientation ..... 1-7
Proposition 65 ..... 1-8
Exhaust Gas Recirculation (EGR) - Diesel Particulate Filter (DPF) exhaust treatment - Product overview ..... 1-9

## 2 SAFETY INFORMATION

Precautionary statements ..... 2-1
Safety rules ..... 2-2
Do not operate tag ..... 2-11
Roll Over Protective Structure (ROPS) ..... 2-12
Ecology and the environment ..... 2-13
Safety signs ..... 2-14
Instructional signs ..... 2-27
International symbols ..... 2-34

## 3 CONTROLS AND INSTRUMENTS

### OPERATOR'S SEAT

Seat belt ..... 3-1
Seat controls ..... 3-2
Roll Over Protective Structure (ROPS) ..... 3-3

### FORWARD CONTROLS

Instrument panel ..... 3-5
Engine fault codes display ..... 3-7
Cruise control ..... 3-10
Transmission shuttle shift lever ..... 3-11
Clutch pedal ..... 3-12
Brake pedals ..... 3-13
Foot throttle pedal ..... 3-14
Hand throttle lever ..... 3-15
Horn switch ..... 3-16
Hazard light switch ..... 3-17
Power Take-Off (PTO) switch ..... 3-18
Key switch ..... 3-19
Differential lock pedal ..... 3-20
Hydrostatic transmision (HST) foot pedals ..... 3-21
Tilt steering lever ..... 3-22
Multifunction light switch ..... 3-23
DPF switch ..... 3-24

## LEFT-HAND SIDE CONTROLS

Transmission range lever ..... 3-25
Park brake ..... 3-26
Front-wheel drive lever ..... 3-27
Mid Power Take Off (PTO) lever - optional ..... 3-28

## RIGHT-HAND SIDE CONTROLS

Hydraulic power lift (HPL) ..... 3-29
Draft control - optional ..... 3-30
Rear remote control valve(s) - optional ..... 3-31
Mid mount two spool control valve ..... 3-32
Transmission main shift lever ..... 3-34

## EXTERIOR CONTROLS

Hood release latch ..... 3-35

# 4 OPERATING INSTRUCTIONS

## COMMISSIONING THE UNIT

Engine break-in procedure ..... 4-1
Diesel Particulate Filter (DPF) regeneration ..... 4-2
Power Take-Off (PTO) operation ..... 4-8
Three-point linkage ..... 4-10
Attaching three-point equipment ..... 4-11
Extendible drawbar ..... 4-14
Hydraulic lift rocker ..... 4-15
Hydraulic Power Lift (HPL) drop rate control valve ..... 4-15

## STARTING THE UNIT

Key switch ..... 4-16
Cold starting aids ..... 4-17
Starting the engine ..... 4-18
Starting the tractor with jumper cables ..... 4-23

## STOPPING THE UNIT

Stopping the engine ..... 4-24
Emergency stopping ..... 4-25
Brakes ..... 4-26

## MOVING THE UNIT

Steering wheel adjustment ..... 4-28
Steering operation ..... 4-29
Transmission operation at low ambient temperatures ..... 4-30
Hydrostatic Transmission (HST) operation ..... 4-31
12 x 12 Synchronized transmission operation ..... 4-33

PARKING THE UNIT
Brakes and controls - Park ..... 4-35

5 TRANSPORT OPERATIONS
ROAD TRANSPORT
External lighting - Identification ..... 5-1
Hazard warning light operation ..... 5-2
Turn signal operation ..... 5-3
Road lights operation ..... 5-4
Work lights operation ..... 5-5
Rear work light (optional) ..... 5-6
Driving the vehicle ..... 5-7

SHIPPING TRANSPORT
Carrying the tractor on a transporter ..... 5-8

RECOVERY TRANSPORT
Towing ..... 5-8

6 WORKING OPERATIONS
GENERAL INFORMATION
Tractor ballasting ..... 6-1
Tractor ballasting weights ..... 6-2
Liquid ballast ..... 6-4

7 MAINTENANCE
GENERAL INFORMATION
General information ..... 7-1
Safety rules diesel fuel ..... 7-3
Biodiesel fuel ..... 7-3
Refueling the tractor ..... 7-4
Consumables ..... 7-5

MAINTENANCE CHART
Maintenance Chart ..... 7-6

Every 10 hours or daily
Engine oil level ..... 7-7
Engine cooling system ..... 7-9

## After first 50 hours


Engine oil and filter ..... 7-10
Pre-fuel filter ..... 7-12
Fuel filter ..... 7-13
Hydraulic oil filter - Hydraulic system ..... 7-14
Hydrostatic (HST) oil filter ..... 7-14
Roll Over Protective Structure (ROPS) ..... 7-15
Wheels bolt/nut ..... 7-16


## Every 50 hours


Grease fittings ..... 7-17
Transmission fluid level ..... 7-18
Clutch pedal free play ..... 7-18
Brake pedal free play ..... 7-19
Hydrostatic transmission (HST) neutral adjustment ..... 7-19
Engine belts ..... 7-20
Tires and wheels ..... 7-21
Front axle differential oil level ..... 7-22
Air cleaner - Primary element ..... 7-23


## Every 100 hours


Fuel filter ..... 7-24


## Every 300 hours


Engine oil and filter ..... 7-25
Hydraulic filter ..... 7-25
Hydrostatic (HST) oil filter - HST system ..... 7-25
Pre-fuel filter ..... 7-25
Engine belts ..... 7-25
Wheels bolt/nut ..... 7-25
Air cleaner primary element ..... 7-26


## Every 500 hours


Fuel filter ..... 7-27


## Every 600 hours


Front axle differential fluid ..... 7-28
Transmission fluid ..... 7-29


## Every 1000 hours


Air cleaner inner element ..... 7-30
Engine coolant ..... 7-31


## General maintenance


Fuel injection system - Bleed ..... 7-32
Hydrostatic transmission (HST) neutral adjustment ..... 7-34

Engine belts ..... 7-35
Roll Over Protective Structure (ROPS) frame - Replace - Possible damage ..... 7-36
Battery ..... 7-36
Alternator ..... 7-37
Fuses ..... 7-38
Maxi-fuse ..... 7-39
Headlight bulb ..... 7-39
Tail/brake light bulb ..... 7-40
Turn signal/hazard light bulb ..... 7-40
Wheels bolt/nut ..... 7-42
Front wheels toe-in ..... 7-42
Brake pedal free play ..... 7-43
Clutch pedal free play ..... 7-44

STORAGE
Storing the tractor ..... 7-45
Removal of tractor from storage ..... 7-46

8 TROUBLESHOOTING
SYMPTOM(S)
Engine - Troubleshooting ..... 8-1
Clutch - Troubleshooting ..... 8-2
Hydraulic service brakes - Troubleshooting ..... 8-2
Hydraulic Lift System - Troubleshooting ..... 8-2
Steering - Troubleshooting ..... 8-3
Hydrostatic transmission - Troubleshooting ..... 8-4
Electrical system - Troubleshooting ..... 8-4

9 SPECIFICATIONS
Wheel tread settings ..... 9-1
Tire inflation pressures ..... 9-2
Liquid ballast ..... 9-3
General specifications ..... 9-4
Tractor dimensions ..... 9-9

10 ACCESSORIES
Optional equipment ..... 10-1

11 FORMS AND DECLARATIONS
Delivery report - owner copy ..... 11-3
Delivery report - dealer copy ..... 11-5

# 1 - GENERAL INFORMATION

## Note to the Owner

This manual contains information concerning the adjustment and maintenance of your new equipment. You have purchased a dependable machine, but only by proper care and operation can you expect to receive the performance and long service built into this equipment. Please have all operators read this manual carefully and keep it available for ready reference.

Your CASE IH dealer will instruct you in the general operation of your new equipment. (Refer to the 'Delivery Report' at the back of this manual.) Your dealer's staff of factory-trained service technicians will be glad to answer any questions that may arise regarding the operation of your machine.

Your CASE IH dealer carries a complete line of genuine CASE IH service parts. These parts are manufactured and carefully inspected to insure high quality and accurate fitting of any necessary replacement parts. Be prepared to give your dealer the model and product identification number of your new equipment when ordering parts. Locate these numbers now and record them below. Refer to the 'General Information' section of this manual for the location of the model and product identification numbers of your machine.

**PLEASE RECORD THE FOLLOWING INFORMATION**

**Model** _____

**Product Identification Number (PIN)** _____

**Date Purchased** _____

**Engine Model** _____

**Engine PIN** _____

This is the safety alert symbol. It is used with and without signal words to alert you to potential personal injury hazards. Obey all safety messages that follow this symbol to avoid possible death or injury.

**⚠ WARNING**

**Illustrations in this manual may show protective shielding open or removed to better illustrate a particular feature or adjustment.**
**Replace all shields before operating the machine.**
**Failure to comply could result in death or serious injury.**

W0012A

### IMPROVEMENTS

CNH America LLC is continually striving to improve its products. We reserve the right to make improvements or changes when it becomes practical and possible to do so, without incurring any obligation to make changes or additions to the equipment sold previously.

# Biodiesel fuel

Fatty Acid Methyl Ester Biodiesel (Biodiesel Fuel) consists of a family of fuels derived from vegetable oils treated with methyl esters.

***NOTICE:*** *Biodiesel Fuel blends are approved for your engine only if they comply with* ***EN14214*** *Specification Standards or* ***ASTM D6751****.*

***NOTICE:*** *It is imperative that you check which blend is approved for your engine with your CASE IH dealer. Be aware that the use of Biodiesel Fuel that does not comply with the Standards mentioned above could lead to severe damage to the engine and fuel system of your machine. The use of fuels that are not approved may void CASE IH Warranty coverage.*

## Biodiesel Fuel Usage Conditions

***NOTICE:*** *The Biodiesel Fuel must meet the fuel Specification mentioned above.*

Biodiesel Fuel must be purchased from a trusted supplier that understands the product and maintains good fuel quality. Biodiesel Fuel must be pre-blended by the supplier. Mixing Biodiesel Fuels on-site can result incorrect mixture that can lead to problems with both engine and fuel system.

Engine performance is affected by the use of Biodiesel Fuel. There may be up to **12 %** reduction in power or torque depending on the blend used.

***NOTICE:*** *DO NOT modify the engine and/or injection pump settings to recover the reduced performance.*

The reduced power must be accepted if using any Biodiesel Fuel blend.

Some modification may be required to allow your engine to run Biodiesel Fuel. Consult you dealer for complete information on these modifications.

Biodiesel Fuel has a higher cloud point than Diesel Fuel.

***NOTICE:*** *The use of high Biodiesel Fuel blends are not recommended in cold weather conditions.*

With Biodiesel Fuels, it may be necessary to change the engine oil, engine oil filter and fuel filter elements more frequently than with Diesel Fuels. Biodiesel Fuel can remove rust and particles from the inside of on-site fuel storage tanks that would normally adhere to the sides of the tank. Like particle deposits that commonly occur with Diesel Fuel, these particles can become trapped by the machine fuel filters, causing blockage and shortening filter life. In cold weather, this is more likely to happen. Consult your CASE IH dealer for information on cold weather operation and proper maintenance intervals when using any Biodiesel Fuel blend.

When handling Biodiesel Fuel, care must be taken not to allow water into the fuel supply. Biodiesel Fuel will actually attract moisture from the atmosphere.

Fuel tanks must be kept as full as possible to limit the amount of air and water vapors in them. It may be necessary to drain the fuel filter water tap more frequently.

Potential oxidation and stability could be a problem with the fuel stored in the machine.

***NOTICE:*** *Machines must not be stored for more than three months with Biodiesel Fuel blends in the fuel system.*

If long storage periods are necessary, the engine must run on Diesel Fuel for 20 hours to flush the Biodiesel Fuel out of the engine fuel system prior to storage.

***NOTICE:*** *Biodiesel Fuel must not be stored in on-site storage tanks for more than three months.*

Any spillage of Biodiesel Fuel must be cleaned up immediately before it can cause damage to the environment and the paint finish of the machine.

Before using Biodiesel Fuel blends you should consult with your dealer to receive full information about the approved blend for your machine and any detailed conditions of its usage.

***NOTICE:*** *Be aware that not fulfilling the requirements and conditions of Biodiesel Fuel usage will void your machine's CASE IH Warranty coverage.*

# Tractor intended use

This machine was designed to power and propel itself. It is intended for agricultural use to pull or carry tractor attachments or load and move materials when equipped with a front end loader with a variety of buckets.

## PROHIBITED USAGE

No parts or attachments should be fitted to this machine, which have not been released by CASE IH. They might affect machine operation, safety of the user or other people, stability or wear characteristics of the machine.

***NOTICE:*** *Use only approved accessories and attachments designed for your machine. Consult your dealer on changes, additions or modifications that may be required for your machine. Do not make any unauthorized modifications to your machine.*

***NOTICE:*** *DO NOT use this machine for any purpose or in any manner other than as described in the manual, decals, or other product safety information provided with the machine. These materials define the machine's intended use.*

***NOTICE:*** *The engine and fuel system on your machine is designed and built to government emissions standards. Tampering by dealer, customers, operators and users is strictly prohibited by law. Failure to comply could result in government fines, rework charges, invalid warranty, legal action and possible confiscation of the machine until rework to original condition is completed. Engine service and/or repairs must be done by a certified technician only!*

***NOTE:*** *All persons who will be operating this machine shall possess a valid local vehicle operating permit and/or other applicable local age work permits.*

# Electro-magnetic compatibility (EMC)

Interference may arise as a result of add-on equipment that may not necessarily meet the required standards. As such interference can result in serious malfunction of the unit and/or create unsafe situations, you must observe the following:

- The maximum power of emission equipment (radio, telephones, etc.) must not exceed the limits imposed by the national authorities of the country where you use the machine
- The electro-magnetic field generated by the add-on system should not exceed **24 V/m** at any time and at any location in the proximity of electronic components
- The add-on equipment must not interfere with the functioning of the on board electronics

Failure to comply with these rules will render the CASE IH warranty null and void.

# Product identification

The Product Identification Plate **(1)** is located on the left-hand side of the front frame..

The numbers on the plate are important in the event your tractor should require future service.

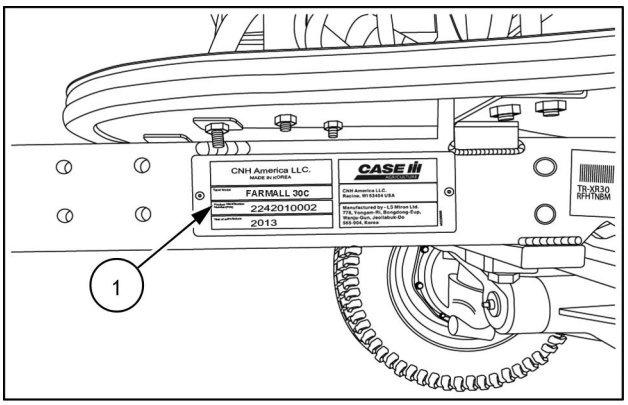


NHIL13CT01337AA 1

The engine identification information plate **(2)** is located on the right-hand side of the engine block, behind the fuel injection pump.

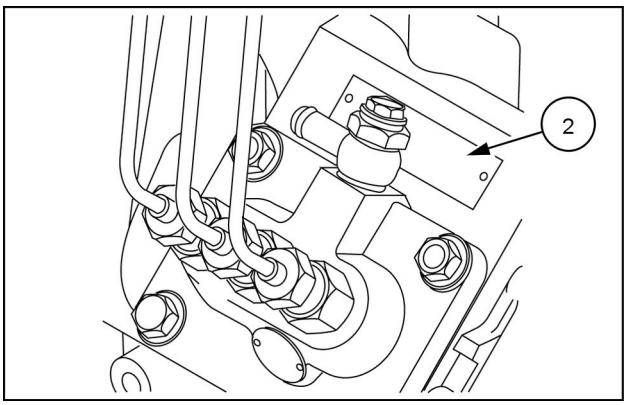


NHIL13CT01158AA 2

# Operator's manual storage

The operator’s manual must be stored in a compartment **(1)** located in the rear of the operator’s seat back and be kept available for use by all operators.

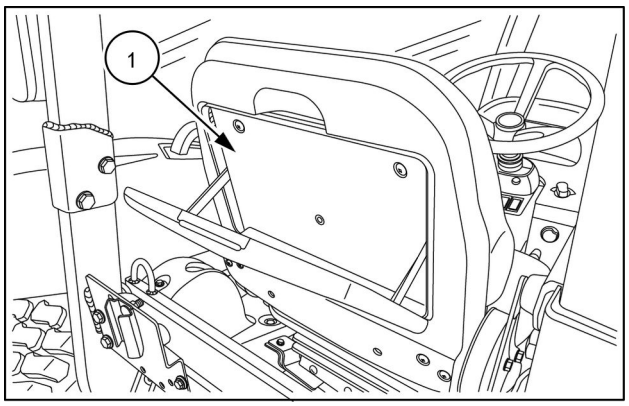


NHIL13CT01163AA 1

# Machine orientation

***NOTE:*** *On this equipment, left–hand and right-hand are determined by standing behind the unit, looking in the direction of travel.*

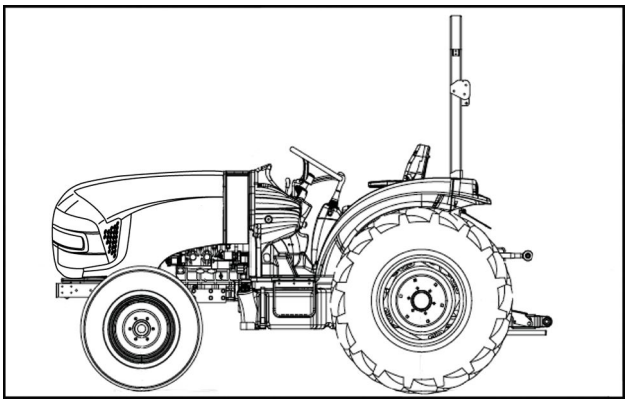

NHIL13CT01338AA 1

## Left-hand view

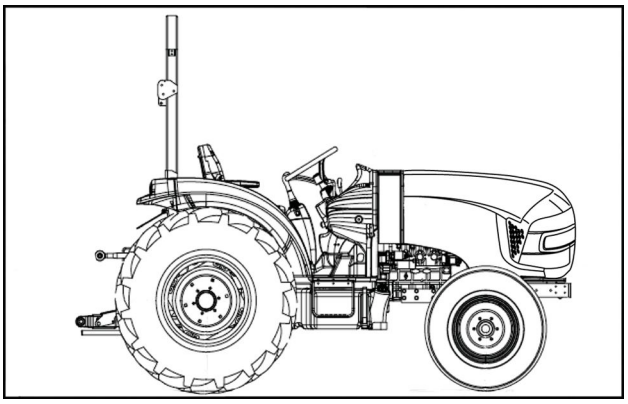

NHIL13CT01339AA 2

## Right-hand view

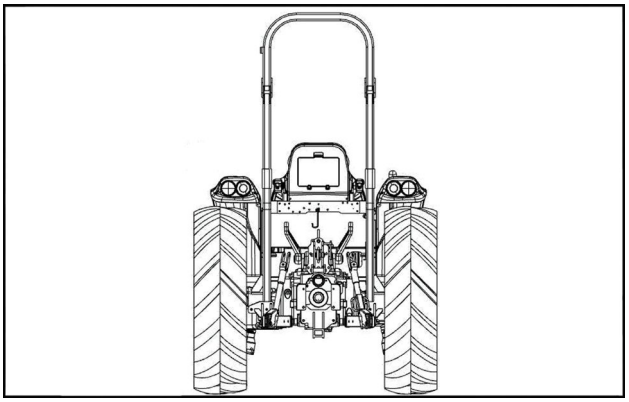

NHIL13CT01186AA 3

## Rear view

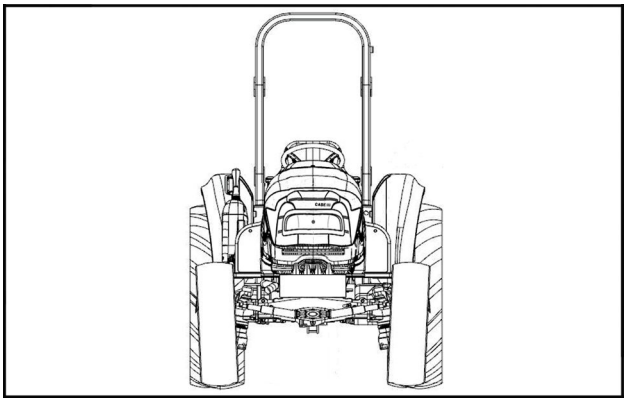

NHIL13CT01340AA 4

## Front view

# Proposition 65

BT09A213 1

Our support email:

ebooklibonline@outlook.com