ORIGINAL INSTRUCTIONS

Rowtrac™ 400
Rowtrac™ 450
Rowtrac™ 500
Steiger® 400
Steiger® 450
Steiger® 500
Steiger® 550
Steiger® 600
Quadtrac® 450
Quadtrac® 500
Quadtrac® 550
Quadtrac® 600
Tier 2
Tractor

PIN ZGF306300 and above

OPERATOR'S MANUAL

Part number 47982399
1st edition English
March 2016

CASE IH AGRICULTURE

Contents

1 GENERAL INFORMATION

Note to the owner 1-1
Intended use 1-1
CNH Industrial America LLC technical manuals 1-2
Your tractor 1-3
Electro-Magnetic Compatibility (EMC) 1-5
Product identification 1-6
Operator's manual storage on the machine 1-9
Machine orientation 1-10
Component location 1-12

2 SAFETY INFORMATION

Safety alert symbol and signal word definition 2-1
Safety rules 2-2
Protective structures 2-13
Emergency exit 2-14
Articulation cylinder locking blocks 2-15
Safety signs 2-16

3 CONTROLS AND INSTRUMENTS

Access to operator's platform

Cab access/exit 3-1

OPERATOR'S SEAT

Overview 3-3
Control identification 3-4

INSTRUCTOR'S SEAT

Overview 3-7

FORWARD CONTROLS

Steering column controls 3-9
Front console controls 3-12
Pedal controls 3-13
Ventilation 3-15
Front sun shade 3-16

RIGHT-HAND SIDE CONTROLS

Armrest console 3-17
Multi-function handle 3-18
Control panel 3-22
Remote valve controls 3-28
Joystick 3-29
Armrest compartment 3-30
Adjusting the armrest console 3-32

REARWARD CONTROLS
Rear sun shade 3-33

OVERHEAD CONTROLS
Overview 3-34
Automatic Temperature Control (ATC) 3-36
Automatic Temperature Control (ATC) operation 3-40
Center panel controls 3-42
Radio (if equipped) 3-46
Interior and access lights 3-47
Interior rear-view mirror 3-48

EXTERIOR CONTROLS
Exterior hitch control 3-49
Outside extendable mirrors 3-49

INSTRUMENT CLUSTER
Overview 3-50
Gauges 3-50
Status and warning icons 3-51
Upper display 3-54
Lower display 3-55
Keypad 3-57
Instrumentation - setup menu 3-58
Instrumentation - adjust menu 3-65
Performance instrumentation 3-72

4 OPERATING INSTRUCTIONS

COMMISSIONING THE UNIT
Before starting the engine 4-1

STARTING THE UNIT
Normal engine starting 4-5
Cold temperature operation 4-7

STOPPING THE UNIT
Stopping the machine and the engine 4-9

MOVING THE UNIT
Powershift transmission 4-10
Electronic steering system 4-18
Automatic Productivity Management (APM™) 4-19
Differential lock system 4-29
Power management 4-33
Constant engine speed 4-34
Electronic end-of-row system 4-36

Engine compression brake (if equipped) 4-46

5 TRANSPORT OPERATIONS

ROAD TRANSPORT

Tractor warning lamps 5-1
Operating the tractor warning lamps 5-3
Safe transport speed 5-4
Implement warning lamps and Slow Moving Vehicle (SMV) symbol 5-5
Safety chain 5-5

SHIPPING TRANSPORT

Securing the tractor for shipping 5-6

RECOVERY TRANSPORT

Safety rules 5-7
Towing the tractor 5-8

6 WORKING OPERATIONS

GENERAL INFORMATION

Product overview 6-1

REAR POWER TAKE-OFF (PTO)

Power Take-Off (PTO) safety rules 6-2
Connecting the Power Take-Off (PTO) 6-4
Power Take-Off (PTO) operation 6-5

THREE-POINT HITCH

Identification 6-8
Link adjustment 6-9
Sway block adjustment 6-12
Mechanical float adjustment 6-13
Hitch quick coupler - Category IVN 6-14
Transport lock 6-17
Hitch operation 6-18
Rear remote hitch switch 6-22
Position control operation 6-23
Slip control operation 6-25

DRAWBARS AND TOWING ATTACHMENTS

Safety rules 6-27
Drawbar capacities 6-28
Scraper operation 6-32

TRAILER BRAKE COUPLER

Safety rules 6-33

Trailer brake connections 6-33

AUXILIARY POWER CONNECTIONS
External power and lighting connections 6-34
Cab power connections 6-36

HYDRAULIC REMOTE CONTROL VALVES
Valve couplers and connections 6-39
Optional circuits 6-46
Hydraulic remote valve transport lock 6-47
Right-hand armrest controls 6-48
Operating the lever controls 6-49
Operating the Joystick control 6-53
Remote valve display screens 6-58
Auto auxiliary mode operation 6-61
Auto depth control operation 6-64

BALLASTING THE TRACTOR
Guidelines 6-67
Weights, cast metal and liquid 6-71
Wheel slip 6-78

FRONT AND REAR AXLE
Tire safety 6-79
Pressure and load ratings 6-80
Wheel installation 6-87
Wheel tread settings 6-93
Pre-conditioning rubber tracks 6-102

7 MAINTENANCE

GENERAL INFORMATION
Advice 7-1
Engine hood 7-2
Engine side shields 7-3
Opening the right-hand service door 7-4
Battery access 7-5
Power cut-off switch 7-6
Filling the fuel tank 7-8
Fuel tank capacity 7-9
Tire and rim service 7-10
Tractor jacking points 7-12
Lubricants and capacities 7-14
Recommended engine oil for operating temperature ranges 7-15
General specification - Diesel fuel 7-16
General specification - Biodiesel fuels 7-17
Organic Acid Technology (OAT) coolant 7-19
Electrical specifications 7-20

Battery system 7-21
Auxiliary battery connections 7-23
Maintenance chart notes 7-25

MAINTENANCE CHART

Maintenance chart 7-26

At warning message display

Air cleaner 7-28
Primary fuel filter 7-29
Fuel supply restricted (13L engines only) 7-29

Every 10 hours or daily

Engine oil level 7-30
Wheel bolt torque 7-30
Weight bolt torque 7-30
Transmission oil level 7-31
Hydraulic and axle oil level 7-32
Engine coolant level 7-33
Fuel level 7-34
General tractor inspection 7-34

Every 50 hours

Fuel tank and fuel filter 7-35
Articulation hinge - Upper front 7-36
Oscillation hinge - Rear 7-37
Articulation hinge - Lower 7-37
Articulation cylinder - Front, left hand, right hand 7-38
Articulation cylinder - Rear, left hand and right hand 7-38
Hitch cylinder pin - Upper (if equipped) 7-38
Hitch cylinder pin - Lower (if equipped) 7-39
Hitch rockshaft - Left-hand and right hand 7-39
Hitch lift links and top link 7-40
Driveshaft carrier bearing 7-40

First 100 hours

Powershift transmission clutches 7-41

Every 600 hours

Engine oil and filter (see Note 3) 7-47
Engine fuel filter (see Note 4) 7-50
Engine fuel pre-filter 7-53
Fuel tank vent (see Note 6) 7-56
Battery electrolyte level 7-57
Cab air filter, outside (see Note 1) 7-58
Air tubing - Engine 7-59
Alternator - Water pump belt 7-59

Power Take Off (PTO) carrier bearing 7-60
Power Take Off (PTO) slip joint 7-60
Radiator and coolers 7-61
Saddle tanks 7-63
Cab recirculation filter 7-63

Every 1000 hours or yearly

Powershift transmission clutches 7-64

Every 1200 hours

Engine crankcase breather filter 7-65
Transmission oil and filter (see Note 4) 7-67
Transmission vent 7-68
Engine air filters (see Note 2) 7-69
Door lock and hinges 7-75

Every 1800 hours

Hydraulic oil and filters (see note 4) 7-76
Hydraulic reservoir breather 7-78
Cab air filter, outside (see Note 1) 7-79
Engine air tubing 7-80
Idler and roller wheel oil (see Note 5) 7-81

Every 2400 hours

Engine coolant drain and flush 7-82

As required

Vehicle fire prevention 7-85
Remote valve couplers 7-86
Pressure cooling system hoses 7-86
Hydraulic system hoses 7-86
Tire pressure 7-86
Engine fan belt 7-87
Viscous fan drive 7-87
Track inspection and bolt torque 7-88
Track tension release 7-90
Track alignment 7-92
Cab fabric and carpet 7-94
Seat belt 7-94
Battery removal and installation 7-95
Hood lamps 7-97
Flood and work lamps 7-102
Fender tail light and warning light 7-105
Roof warning light 7-107
Rotating beacon light 7-109
Interior lights 7-110

Fuse and relay locations
Fuse and relay locations 7-113

STORAGE
Placing in storage 7-121
Removing from storage 7-122

8 TROUBLESHOOTING
FAULT CODE RESOLUTION
Fault code retrieval 8-1

ALARM(S)
Display warnings 8-3
Transmission disengages; neutral icon flashes 8-12

9 SPECIFICATIONS
Engine specifications 9-1
Power train and hydraulics 9-4
Lubricants and capacities 9-7
Speed charts 9-8
Vehicle dimensions and shipping weight 9-13
Maximum operating weight 9-17

10 ACCESSORIES
Farming system displays 10-1
Chemical tank mounting 10-2
General accessories 10-5

1 - GENERAL INFORMATION

Note to the owner

This manual contains important information about the safe operation, adjustment, and routine maintenance of your tractor. The manual is divided into ten chapters as outlined on the Contents page. Refer to the index at the end of this manual for locating specific items about your tractor.

Do NOT operate or permit anyone to operate or service this machine until you or the other persons have read this manual. Use only trained operators who have demonstrated the ability to operate and service this machine correctly and safely.

Store this operator's manual in the manual compartment behind the operator's seat in the vehicle. Make sure this manual is in good condition. Contact your dealer to obtain additional manuals. Contact your dealer for any further information or assistance about your machine. Your dealer has approved service parts. Your dealer has technicians with special training that know the best methods of repair and maintenance for your tractor.

ATTENTION: *The engine and fuel system on your machine is designed and built to government emissions standards. Tampering by dealers, customers, operators and users is strictly prohibited by law. Failure to comply could result in government fines, rework charges, invalid warranty, legal action and possible confiscation of the machine until rework to original condition is complete. Engine service and/or repairs must be done by a certified technician only!*

Intended use

Steiger®, **Quadtrac®**, and **Rowtrac™** series tractors with standard equipment and authorized attachments, are intended to be used for customary farming, land leveling and related agriculture operations (intended use). This tractor is not intended for forestry use or for use with loaders. The cab on this tractor does not offer sufficient protection for forestry work.

Installation of utility (dozer) blades, tile plows, front loaders or push bars on the tractor is not approved. Any tractor damage resulting from the installation and/or use of such equipment is not covered by the tractor warranty.

Consult an authorized dealer or CNH Industrial America LLC on changes, additions or modifications that can be required for this machine to comply with various regulations and safety requirements. Unauthorized modifications will cause serious injury or death. Anyone making such unauthorized modifications is responsible for the consequences.

Do not use this machine for any purpose or in any manner other than as described in the manual, decals, or other product safety information provided with the machine. These materials define the machine's intended use.

Use in any other way is considered as contrary to the intended use. The manufacture accepts no liability for any damage or injury resulting from this misuse and these risks must be born solely by the user.

Compliance with and strict adherence to the conditions of operation, service and repair as specified by the manufacturer also constitute essential elements for the intended use.

All persons who will be operating this machine shall possess a valid local vehicle operating permit and/or other applicable local age work permits.

This tractor must be operated, serviced and repaired only by persons familiar with all its particular characteristics and acquainted with the relevant safety rules (accident prevention).

The accident prevention regulations, all other generally recognized regulations on safety and occupational medicine and the road traffic regulations must be observed at all times.

Any arbitrary modifications carried out on the tractor will relieve the manufacturer of all liability for any resulting damage or injury.

CNH Industrial America LLC technical manuals

Manuals are available from your dealer for your machine. Your dealer can expedite your order for operator manuals and parts catalogs.

Always give the machine name, model and Product Identification Number (PIN) of your machine so your dealer can provide the correct manuals for your machine.

The company is continually striving to improve its products and therefore reserves the right to make improvements and changes when it becomes practical and possible to do so, without incurring any obligation to make changes or additions to the equipment sold previously.

All data given in this manual is subject to production variations.

NOTICE: *Operating and service messages displayed on the electronic operating panel may vary from what is shown in the manual. If this occurs, heed the latest instructions on the electronic operating panel.*

Dimensions and weights are approximate only and the illustrations do not necessarily show the machine in standard condition. For exact information about any particular machine, please consult your dealer.

Manual scope and required training level

This manual provides information on the intended use of your tractor under the conditions foreseen by the manufacturer during normal operation, routine service and maintenance and periodic service and maintenance.

Normal operation is use of the tractor for the purpose intended by the manufacturer by an owner/operator who is familiar with the tractor and the mounted or towed equipment, and who is complying with the information on operation and safe practices, provided in this manual and by the decals on the tractor and the equipment.

Normal operation includes such actions as preparing the tractor for storage and removing the tractor from storage, adding or removing ballast, connecting and disconnecting mounted or towed equipment, raising and lowering components into or out of work position, adjusting tractor settings for specific field or crop settings, etc.

Routine service and maintenance are those actions which must be performed daily to maintain proper tractor function by an owner/operator who is familiar with tractor characteristics, and who is complying with the information on routine service and safe practices in this manual and in the decals on the tractor.

Routine service and maintenance includes such actions as fueling, cleaning, washing, topping off fluid levels, greasing, and replacing consumable articles such as lamp bulbs.

Periodic service and maintenance are those actions which must be performed at regularly defined intervals to maintain proper tractor function by an owner/operator who is familiar with tractor characteristics, and who is complying with the information on periodic service and safe practices in this manual and in the decals on the tractor.

Periodic service and maintenance includes such actions as checking, cleaning and changing air filters, changing engine oil and filters, changing transmission oil and filters, changing front axle and wheel hub fluids, changing coolant, etc.

Some actions in the periodic service and maintenance chart are beyond the knowledge and skills of the owner/operator: for example, engine valve adjustment, fuel injector nozzles. For these actions, the manual instructs the owner/operator to have the action performed by their authorized dealer.

This manual does not contain all the information related to periodical service and maintenance, converting and repairs to be carried out by professional service personnel. These actions require special facilities, technical skills, and/or tools which are not supplied with the machine.

Converting is changing the tractor configuration for a specific crop or soil condition and requires rebuilding or adding components to the vehicle: for example, installation of dual wheels. Repairing is the disassembly and assembly of the tractor to restore proper operation after a component failure or degradation of performance.

Your tractor

This manual covers the **Steiger®** 400, 450, 500, 550, 600, **Rowtrac™** 400, 450, 500, and **Quadtrac®** 450, 500, 550, 600 models.

References are made within this manual of “row crop models” and “high power models”.
Row crop models include **Steiger®** 400, 450, and all **Rowtrac™** models.
High power models include **Steiger®** 500, 550, 600 and all **Quadtrac®** models.

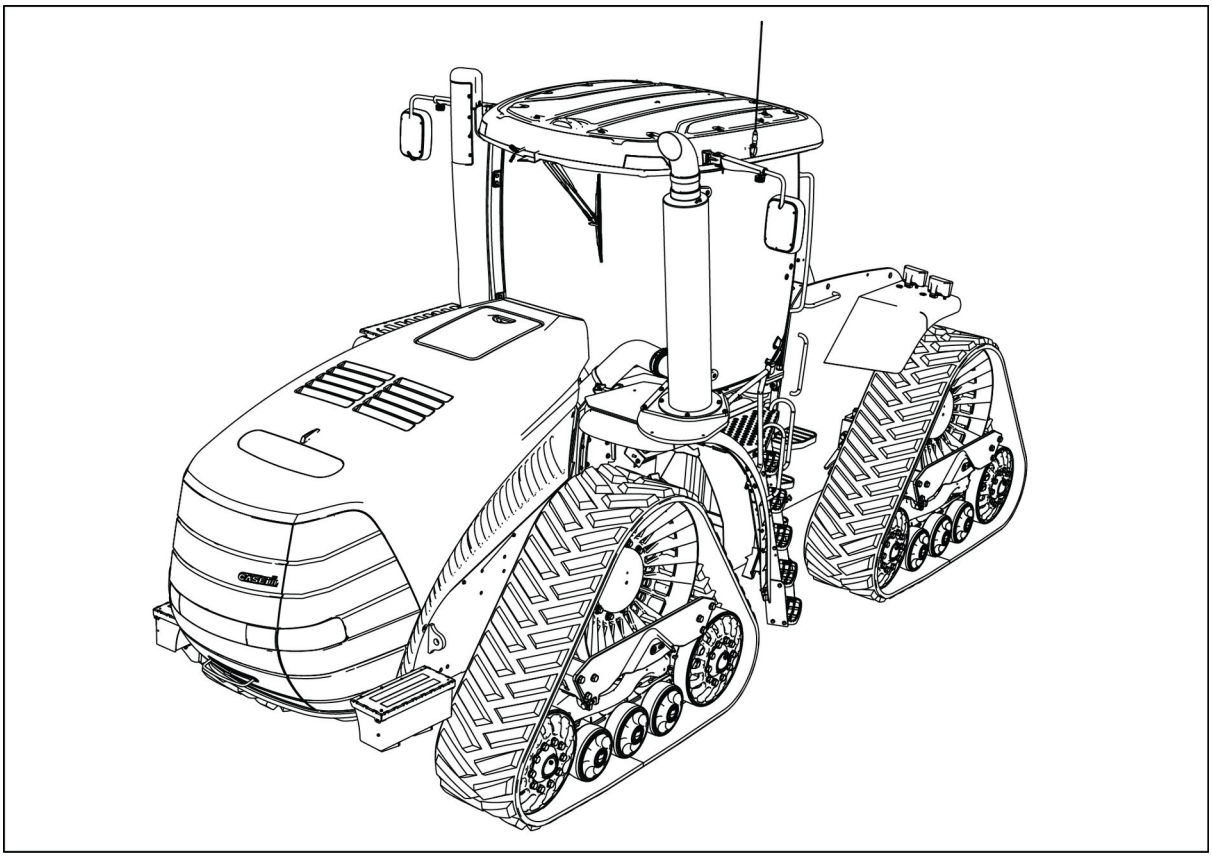

RAIL13TR04795FA 1

Rowtrac™ models

On **Rowtrac™** models, refer to information starting on page **9-8** for transport speed weight guidelines.

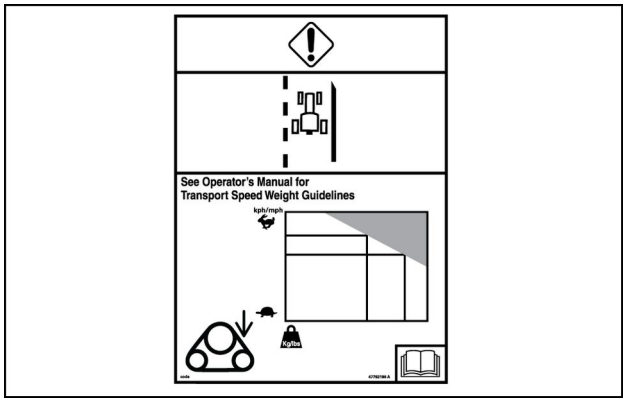

47792196A 2

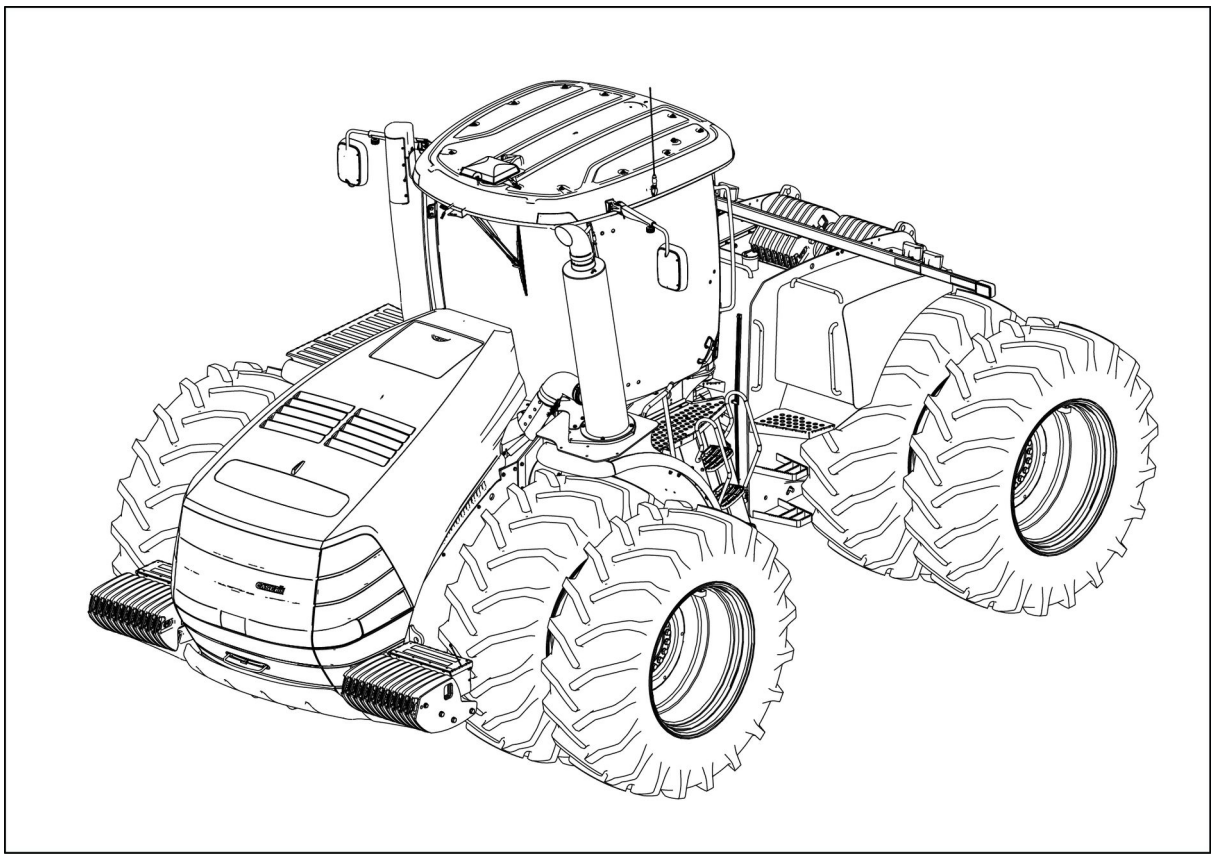

RAIL13TR04793FA 3

Steiger® models

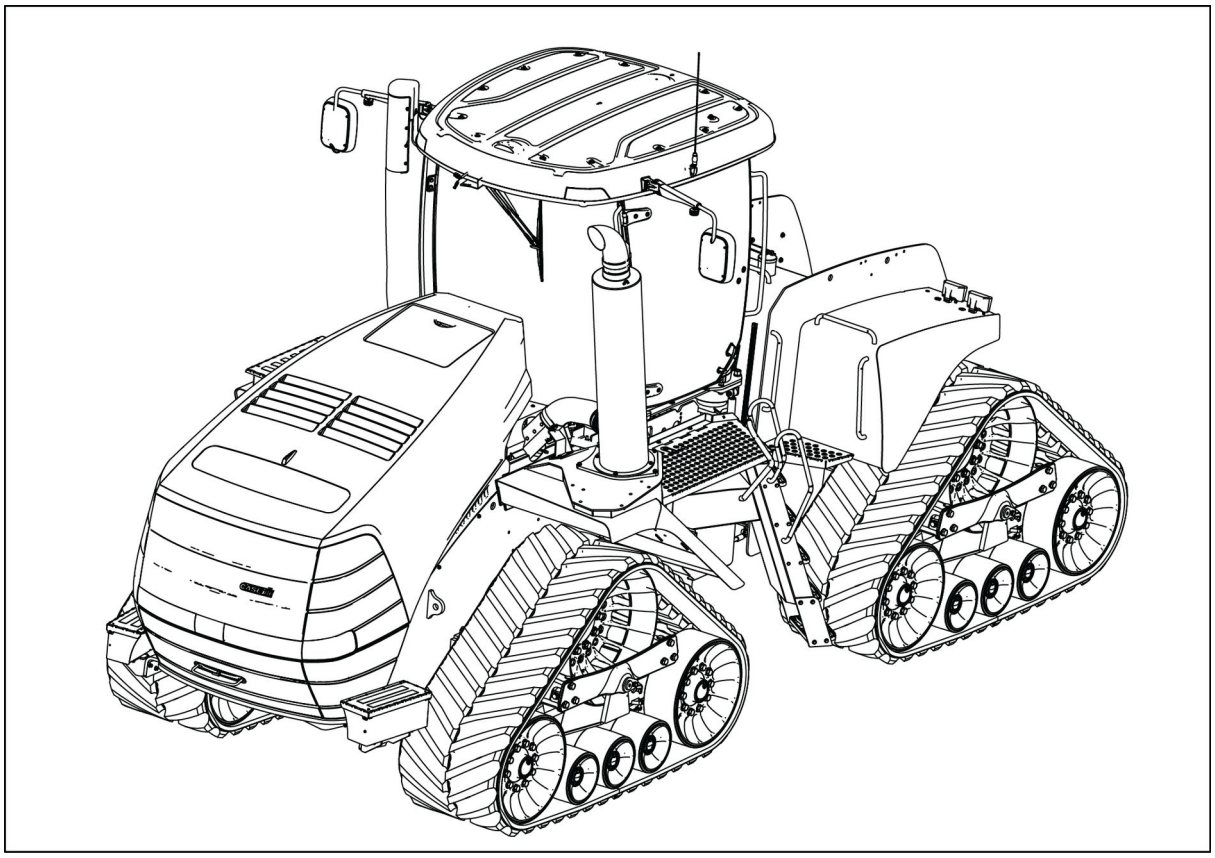

RAIL13TR04794FA 4

Quadtrac® models

Electro-Magnetic Compatibility (EMC)

Interference may arise as a result of add-on equipment that may not necessarily meet the required standards. As such interference can result in serious malfunction of the unit and/or create unsafe situations, you must observe the following:

- The maximum power of emission equipment (radio, telephones, etc.) must not exceed the limits imposed by the national authorities of the country where you use the machine
- The electro-magnetic field generated by the add-on system should not exceed **24 V/m** at any time and at any location in the proximity of electronic components
- The add-on equipment must not interfere with the functioning of the on board electronics

Failure to comply with these rules will render the CASE IH warranty null and void.

Product identification

Tractor model and product identification number

Write your model number, Product Identification Number (PIN), and serial number of major components on the lines provided. If needed, give these numbers to your dealer when you need parts or information for your machine.

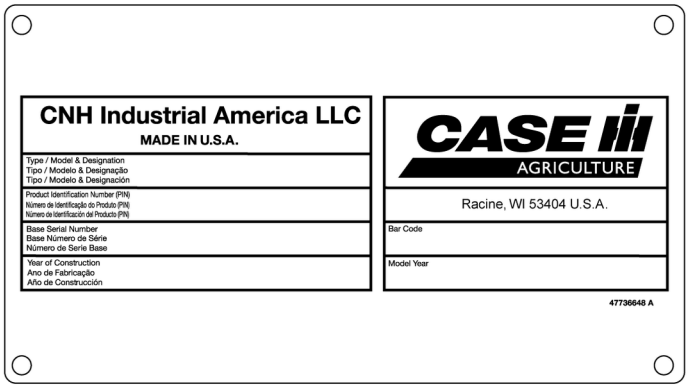

RAIL14TR02261EA 1

Model :

PIN:

NOTE: *Located on the front right-hand side plate in front of front axle.*

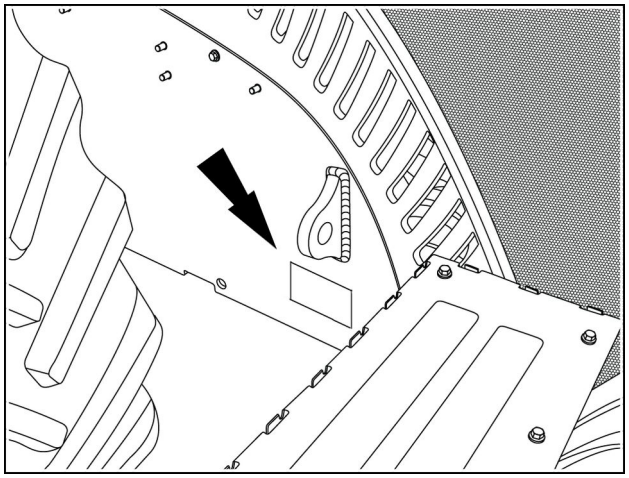

RCPH11FWD114BAM 2

Roll Over Protective Structure (ROPS) serial number

NOTE: *Located under the instructional seat.*

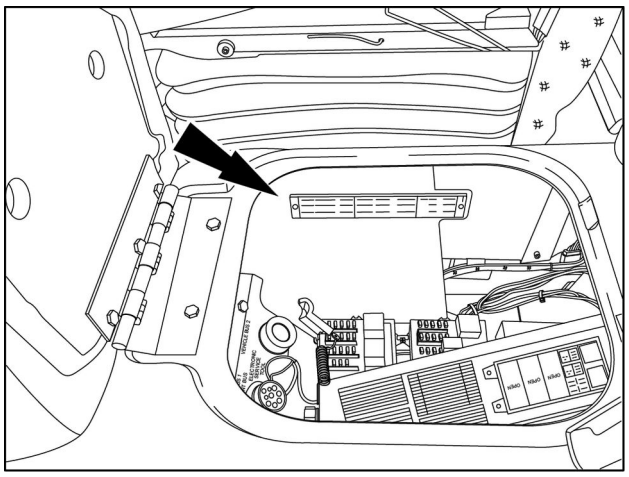

RAIL13TR04833AA 3

Our support email:

ebooklibonline@outlook.com