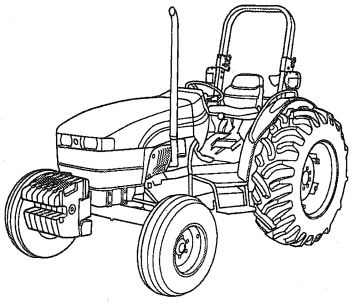

TN55
TN65
TN70
TN75

PRODUCT MANUAL

NEW HOLLAND

TRAINING

86584839 1/00

Reprinted

1 Introduction

TABLE OF CONTENTS

1 Product Story

TN ALL-PURPOSE TRACTORS

Part of the TN Family of tractors

TN....The next level in all-purpose tractor performance.... New Holland has upped the performance ante with their new **TN** Family of all-purpose tractors. The **TN** has all the built in reliability that you've come to expect from New Holland all-purpose tractors plus performance, comfort and serviceability features you've been asking for. Things like: **quieter more powerful engines, loader friendly transmissions, sure stopping hydraulic brakes, more powerful hydraulics, more hydraulic remotes, an operator friendly platform and improved serviceability**. Throw in a new loader designed in tandem with and to capitalize on the TN' features and its easy to see why these 42, 52, 57 and 62 PTO horsepower tractors will take all-purpose performance to the next level.

TN....Designed by you, built for you.

Like the TND and TNS before them the TN was **designed with input from you, the all-purpose tractor customer**. Clinics were held in which you told team members what you wanted and needed in a 40 to 70 horsepower tractor. That list of wants became the road map that guided the team in development of the TN. They **tapped the global resources of New Holland, selecting the best components available for your tractor**. Where the components could not meet your expectations, new ones were developed, including a family of **state-of-the-art transmissions. Eight years and many follow up clinics** (*to ensure team members had read the roadmap correctly*) **later they're here, the TN55, TN65, TN70 and TN75. Tractors designed by and built for you, the North American customer.**

TN....Extensive testing.

Thousands of hours of testing was conducted to ensure that the TN would live up to your expectations for durability and reliability. North American testing was conducted throughout the United States in varying applications and climates. Testing sights in Minnesota, Southern California, North Carolina, Texas and others helped support core testing at New Holland's North American Technical center in New Holland, PA.

TN....Part of New Holland's TN Family of tractors.

The TN is the forth addition to the TN family of tractors. The first member of the family, the TNF (*Orchard tractor*), was introduced in late 1997, followed by the TNS and TND (*Deluxe all-purpose models*) which were introduced in the third quarter of 98. The TN model lineup—

MODEL	CYLINDERS	CU.IN.	P.T.O. HP	ENGINE TORQUE RISE
TN55	3	179	42	29%
TN65	3	179	47	20%
TN70	3	179	57	28%
TN75	3	179	62	36%

1 Feature & Benefit

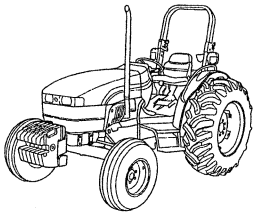

- **NEW HOLLAND STYLING...**The TN fits right in with New Holland's innovative line-up of tractors. Its sloping hood gives you better forward visibility, allowing you to be more productive and safe when operating. Its modern appearance will help the TN command more dollars at resale time.

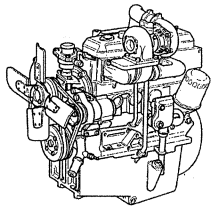

- **EFFICIENT HORSEPOWER...** Quiet, smooth running, fuel efficient, New Holland-Iveco 3 cylinder engines deliver 42, 47, 52 or 62 PTO horsepower at low rated speeds. They allow you to power through tough tasks.

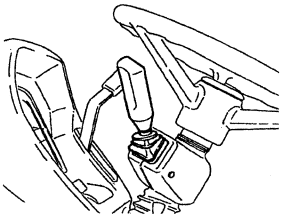

- **5 VERSATILE TRANSMISSIONS...** Select the transmission that's best for you. An 8x8 Constant Mesh transmission with dedicated forward/reverse shuttle level is the base entry on all TN models. Also available **are 8 x 8 Synchro Command™ and 16x16 Synchro Command™ Plus transmissions** featuring synchronized gears and a synchronized, left hand, mechanical shuttle. A new entry in this class of tractor for New Holland is an 8 x 8 or 16 x 16 with **Power Shuttle** offering **clutchless forward/reverse shuttling** for superior operator convenience.

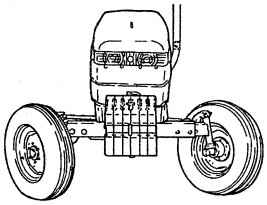

- **2WD AXLE...** An 8 position adjustable axle allows you to adapt the TN to best suite your needs. 55° of total turn angle gives you excellent maneuverability. Its rugged construction ensures years for productive service.

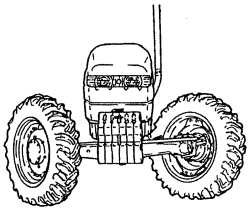

- **FWD AXLE...** When you equip your TN with FWD you benefit from improved traction and fuel efficiency. A heavy-duty, cast iron, axle housing is used on all TN FWD units. It benefits from **single piece casting** for increased strength. Maneuverability is excellent with up to 55° of total turn angle.

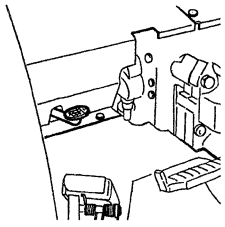

- **DIFFERENTIAL LOCK...** All four models feature mechanically engaged rear differential lock. This simple, proven system allows you to lock both rear axles together for improved traction.

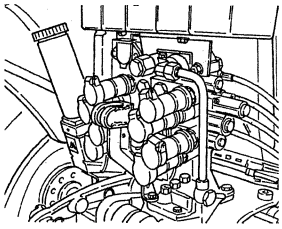

- **POWERFUL HYDRAULIC SYSTEM...** You wanted reduced cycle times so team members increased pump flow. Each TN model features an open center hydraulic system and is available with **up to 3 factory installed (4th DIA) remote valves**. A 12.4 GPM pump is standard on the models TN55, 65 and 70 with a 16.9 GPM pump (*including hydraulic oil cooler*) available as a factory installed option. The TN75 utilizes the 16.9 GPM pump and hydraulic oil cooler.

1 Feature & Benefit

- **OPERATOR FRIENDLY 3-POINT HITCH...** Every TN model features telescoping stabilizers and flexible link ends allowing you to quickly attach and remove implements. New Holland's Lift-O-Matic system and height limiting feature combine to deliver convenient, precise control of 3-PT mounted equipment.

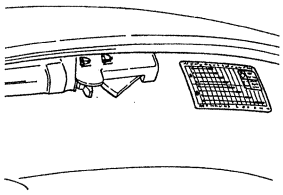

- **DURABLE PTO DRIVELINES...** All TN models feature fully independent, 540-RPM PTO's utilizing the **same 11-inch, cerametalic clutch found on the 80 PTO horsepower TN90F**. Featherability is excellent allowing you to protect your implements during start-up.

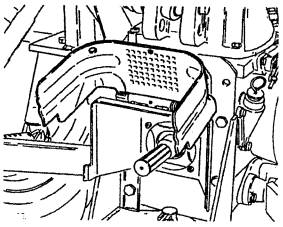

- **ERGONOMIC PLATFORM...** A deluxe seat with fore/aft, weight, and height adjustment combines with conveniently placed; easy to use controls to make you more comfortable.

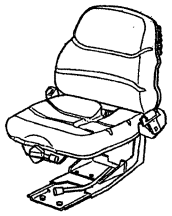

- **INFORMATIVE INSTRUMENT CLUSTER...** Including fuel and coolant temperature gauges, a large tachometer and 11 different displays keep you well informed.

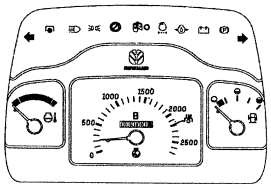

- **BEST IN CLASS LIGHTING...** Including **55-watt halogen headlights**, **55-watt halogen cornering lights** and a 35-watt rear mounted light allow you to operate safely and productively at night.

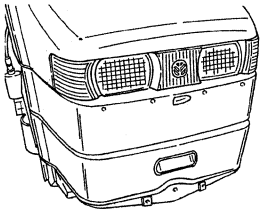

- **SERVICEABILITY...** The flip-up hood makes accessing the engine of your TN quick and easy. **There are no side shield or panels for you to remove during daily servicing.**

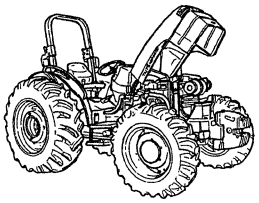

1 Standard Equipment

ENGINE: TN55
3 Cylinder Naturally Aspirated
179 Cubic Inch Displacement
Bosch Fuel Injection System
42 PTO hp* @ 2300 RPM
Under Hood Muffler
Vertical Exhaust
Dual Element Air Filter
17.5 Gallon Fuel Tank
Electric Engine Shut-off
Thermostart Starting Aid

ENGINE: TN65
3 Cylinder Naturally Aspirated
179 Cubic Inch Displacement
Bosch Fuel Injection System
47 PTO hp* @ 2300 RPM
Under Hood Muffler
Vertical Exhaust
Dual Element Air Filter
17.5 Gallon Fuel Tank
Electric Engine Shut off
Thermostart Starting Aid

ENGINE: TN70
3 Cylinder Turbocharged
179 Cubic Inch Displacement
Bosch Fuel Injection System
57 PTO hp* @ 2300 RPM
Under Hood Muffler
Vertical Exhaust
Dual Element Air Filter
17.5 Gallon Fuel Tank
Electric Engine Shut off
Thermostart Starting Aid

ENGINE: TN75
3 Cylinder Turbocharged
179 Cubic Inch Displacement
Bosch Fuel Injection System
62 PTO hp* @ 2300 RPM
Under Hood Muffler
Vertical Exhaust
Dual Element Air Filter
17.5 Gallon Fuel Tank
Electric Engine Shut-off
Thermostart Starting Aid

TN--Built for You!

CLUTCH & TRANSMISSION: TN55 & TN65
11-inch **Organic** Traction Clutch

8x8 Nonsynchronized (*2 ranges of 4 gears and an in-line mechanical shuttle*)

or

8x8 Synchro Command™ (*2 ranges of 4 synchronized gears with synchronized mechanical shuttle*)

CLUTCH & TRANSMISSION: TN70 & TN75
11-inch **Cerametallic** Traction Clutch

8x8 Nonsynchronized (*2 ranges of 4 gears and an in-line mechanical shuttle*)

or

8x8 Synchro Command™ (*2 ranges of 4 synchronized gears with synchronized mechanical shuttle*)

DIFFERENTIAL LOCK: ALL MODELS
Mechanical Rear

BRAKES: ALL MODELS
10.2-inch Wet Disc – Hydraulically Actuated
Self-Equalizing &
Self-Adjusting
Independent Wet Disc Parking Brake

FRONT AXLE: ALL MODELS
ADJUSTABLE 2WD
55° Total Turn Angle
11° Oscillation

STEERING SYSTEM: ALL MODELS
Hydrostatic Power Steering

HYDRAULIC SYSTEM: TN55-TN65 & TN70
Open Center System
Tandem Gear Pumps
Maximum Pump Flow at rated speed:

Implement Pump:	12.4 GPM
Steering Pump:	7.2 GPM

*Manufacturers estimate

1 Standard Equipment

HYDRAULIC SYSTEM: TN75
Open Center System
Tandem Gear Pumps
Hydraulic Oil Cooler
Maximum Pump Flow at rated speed:
Implement Pump: 16.9 GPM
Steering Pump: 7.2 GPM

3-POINT HITCH: ALL MODEL
3962 lbs. Lift Capacity (SAE)
Category II Flexible Link Ends
Telescopic Stabilizers
Two Lever Controls (Position & Draft)
Lower Link Draft Sensing
Lift-O-Matic™ Fast Raise & Lower Switch

PTO: ALL MODELS
11-inch Cerametallic PTO Clutch
Independent, 540 RPM

ELECTRICAL: ALL MODELS
12 - volt Battery (730 CCA)
45 - amp Alternator
7-pin Outlet for Trailer/Implement Lighting
4-pin Power Outlet (25 amp)
Single Pin (8 amp) Accessory Power Outlet

PLATFORM: ALL MODELS
Straddle Mount Configuration
Integral 2 Post Foldable ROPS
Full Coverage Fenders

SEAT: ALL MODELS
Vinyl Seat Cover with
Operator's Presence Sensor
Fore/aft, Weight, Height Adjustment
Retractable Seat Belts

INSTRUMENTATION: ALL MODELS:
Analog Instrument Cluster w/
Tachometer
Fuel Gauge
Temperature Gauge
Warning & Indicator Lights

LIGHTING: ALL MODELS
Two 55-Watt Halogen Front Headlights
Two 55-Watt Halogen Cornering Lights
One Adjustable 35-Watt Work Light (Rear)
Flashing Safety Lights
Brake Lights

WARRANTY: ALL MODELS
New Holland Standard Warranty Applies

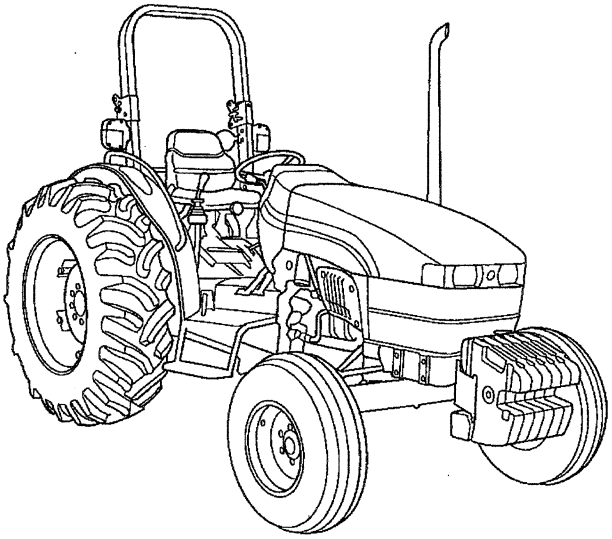

2 Engine

2.1 Engine Characteristics

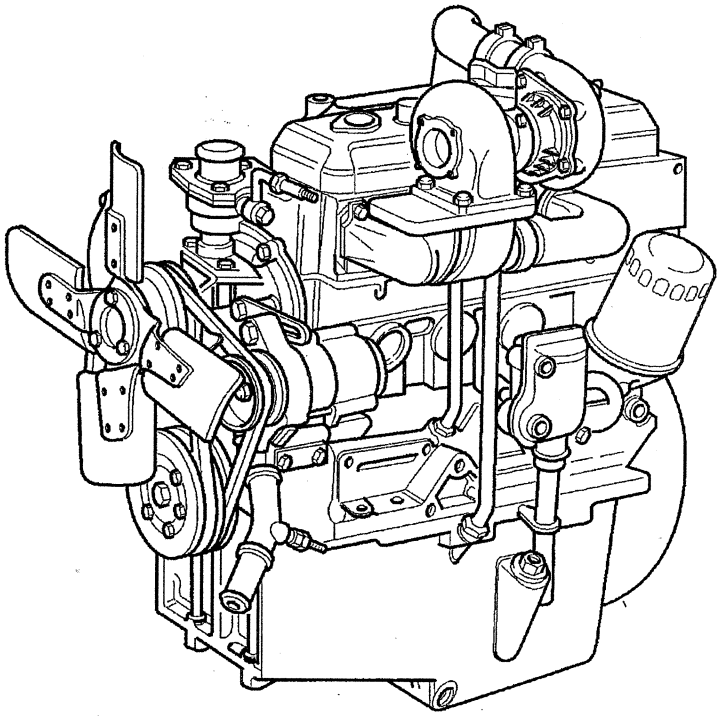

HIGHLIGHTS

- **You wanted improved engine performance so--** New Holland team members selected the Iveco 8000 Series engine from those available as the building block for your TN. Working with New Holland engineers, Iveco developed the models 8035.05 and 8035.25 engines for exclusive use in the TN Family of tractors. **The cornerstone of the TN Family, these engines deliver on your request for plentiful torque backup, quiet operation, superior fuel efficiency and extended durability**.
- **Strength in numbers**--Iveco is recognized as a worldwide leader in diesel engine technology. Over 300,000 Iveco engines are built annually, and used in applications ranging from agricultural to aviation, marine, locomotives and over the road trucks.
- All TN models utilize a **179 cubic inch, three-cylinder diesel engine running at 2300 RPM**. The TN55 and TN65 are naturally aspirated, while the models TN70 and TN75 are turbo-charged. These engines exceed all current international emission regulations. **Torque reserves are excellent, with up to 36% available in the TN75.**
- **Utilizing a common engine simplifies a dealer's parts stocking requirements, and makes servicing the TN easier**.

TN--Built for You!

2 Engine

2.1 Engine Characteristics

	TN55	TN65	TN70	TN75
ENGINE	IVECO 8035.05	IVECO 8035.05	IVECO 8035.25	IVECO 8035.25
Cylinders	3	3	3	3
Displacement	179 CI (2.9 L)	179 CI (2.9 L)	179 CI (2.9 L)	179 CI (2.9 L)
Bore x Stroke in inches (mm)	4.09 x 4.53 (104x115)	4.09 x 4.53 (104x115)	4.09 x 4.53 (104x115)	4.09 x 4.53 (104x115)
Compression Ratio	17:1	17:1	18:1	16.5:1
Aspiration	Normally	Normally	Turbocharged	Turbocharged
Net HP (kW)	50 (37)	53 (39.5)	66 (49.2)	72 (53)
Rated Speed (RPM)	2300	2300	2300	2300
Max Torque in ft-lbs (*Nm*))	148@1400 RPM (*200@1400 RPM*)	162@1400 RPM (*220@1400 RPM*)	195@1400 RPM (*264@1400 RPM*)	218@1400 RPM (*295@1400 RPM*)
PTO HP (kW)	42 (31.3)	47 (35.1)	57 (42.5)	62 (46.3)
Engine Torque Rise %	29	20	28	36
COOLING SYSTEM				
System Capacity in gallons (l)	2.64 (10.0)	2.64 (10.0)	2.64 (10.0)	2.64 (10.0)
Fan	6 Blades/ 16.5 Inches	6 Blades/ 16.5 Inches	6 Blades/ 16.5 Inches	6 Blades/ 16.5 Inches
Drive Type	Fixed	Fixed	Fixed	Fixed
FUEL /AIR/ OIL SYSTEM				
Fuel- Injection Type	Direct	Direct	Direct	Direct
Injection Pump	Bosch \ Rotary	Bosch \ Rotary	Bosch \ Rotary	Bosch \ Rotary
Fuel Filter	Single Element	Single Element	Single Element	Single Element
Fuel Capacity in gallons (liters)	17.5 (66.2)	17.5 (66.2)	17.5 (66.2)	17.5 (66.2)
Air Filter Type	Dry/ Dual Elements	Dry/ Dual Elements	Dry/ Dual Elements	Dry/ Dual Elements
Crankcase Capacity w/ Filter in gal (Liter)	2.0 (7.5)	2.0 (7.5)	2.0 (7.5)	2.0 (7.5)
EXHAUST SYSTEM				
Muffler	Under Hood	Under Hood	Under Hood	Under Hood
Exhaust Outlet	Vertical	Vertical	Vertical	Vertical
ELECTRICAL				
System voltage	12	12	12	12
Alternator (amps)	45	45	45	45
Battery				
Amp hrs	88	88	88	88
CCA	730	730	730	730
Cold Start Aid	Thermostart	Thermostart	Thermostart	Thermostart

2 Engine

2.2 Design and Components

The TN line-up is powered by two variants of the model 8035 New Holland-Iveco engine. Model 8035 engines exceed all current emissionization standards. The models TN55 and TN65 utilize the model 8035.05, a 179 cubic inch (2.9 L), 3 cylinder, naturally aspirated engine with a rated speed of 2300 RPM. The models TN70 and TN75 feature the model 8035.25, a turbocharged version of same 179 cubic inch (2.9), 3-cylinder engine. **Both versions of the 8035 engine feature heavy-duty cast iron blocks for greater strength and rigidity.**

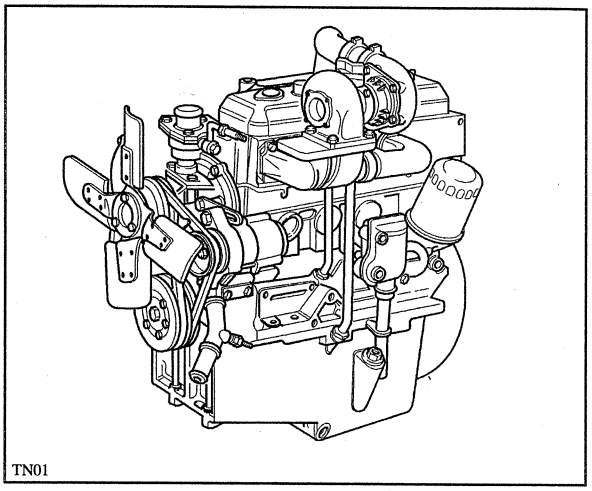
TN01

Model 8035 engines are of dry sleeve design. High phosphorus, nodular cast iron liners (1) are used for increased engine life. Dry sleeve designs reduce the cost of overhauling an engine by allowing the removal and replacement of worn liners. Once replaced the engine is returned to the original design specifications, ensuring peak performance and adherence to emissions regulations.

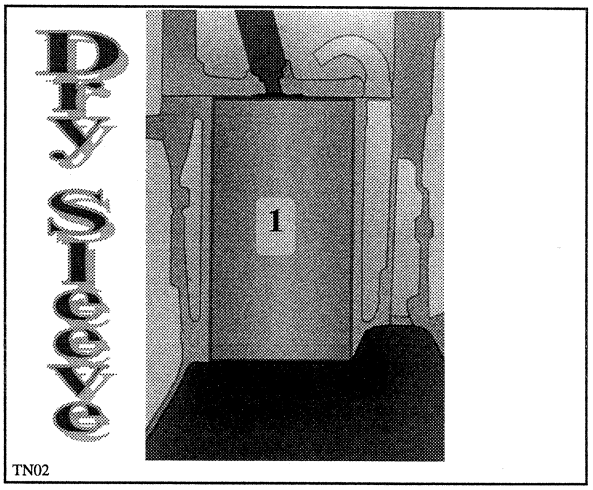

TN02

Model 8035 engines use a **cross-flow cylinder head design** for maximum power production through efficient fuel combustion. On the intake stroke air is pulled into the cylinder through intake port on the right side of the cylinder head. During the exhaust stroke high temperature exhaust gas is expelled through left side of the head. **With this design, intake air remains cool and dense resulting in superior combustion.**

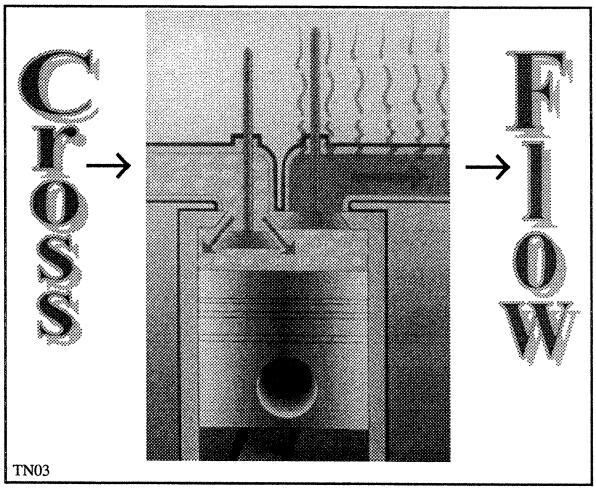

TN03

2 Engine

2.2 Design and Components

The cylinder head features a **specially designed spiral intake port** that causes air to swirl as it enters the combustion chamber. **This feature combines with the alloy piston's re-entrant combustion bowl to provide the best possible fuel/air mixing, for complete combustion and maximum fuel economy**. Chromium plated rings are located high on the piston, reducing the amount of non-usable air in the combustion chamber, resulting in reduced smoke emissions and quieter operation. Engine oil consumption is minimized by the use of a double profile oil control ring.

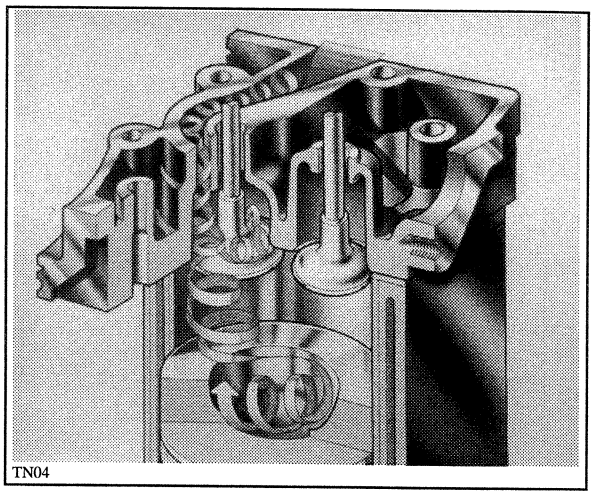
TN04

The connecting rods (1) are center-drilled to provide pressurized oil to the wrist pin bushing. At the same time, the underside of each piston is sprayed with filtered oil to dissipate heat. By reducing heat, engine life is increased.
Model 8035 engines are equipped with a **balancer** to reduce vibration, improving your operating comfort while prolonging engine life.

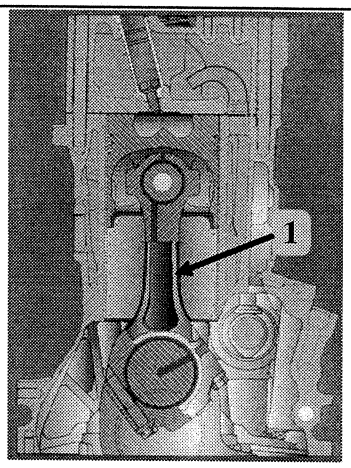

TN05

A premium, **Bosch VE3, rotary fuel injection pump and 5-hole injectors** provide precision metering of fuel for even delivery to all cylinders. Superior fuel efficiency, easy starting and outstanding torque back-up are all benefits of this system. A single stage fuel filtering system with paper filter element and water drain ensures that only clean fuel enters the injection system.

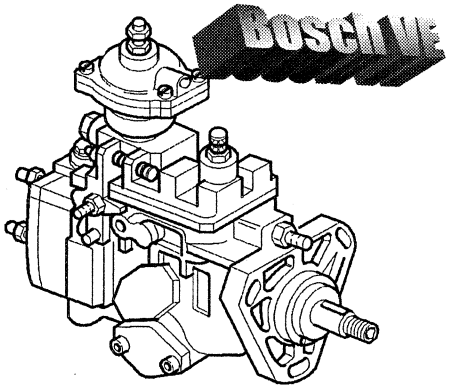

TN06

2 Engine

2.2 Design and Components

Model 8035 engines deliver outstanding engine torque rise. Torque rise is important on all tractor engines because it allows the engine to pull hard even as RPM's fall. High torque rise means you won't need to down-shift to get through tough spots, for improved convenience and productivity. **Torque rise on the TN is as high as 36% on the model TN75**.

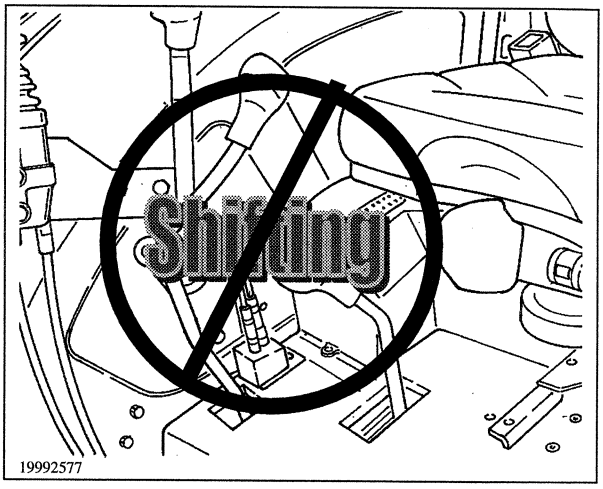

All TN tractors come standard with **under hood mufflers** (1) for improved forward visibility and reduced noise levels. A horizontal exhaust kit is available as a Dealer Installed Accessory.

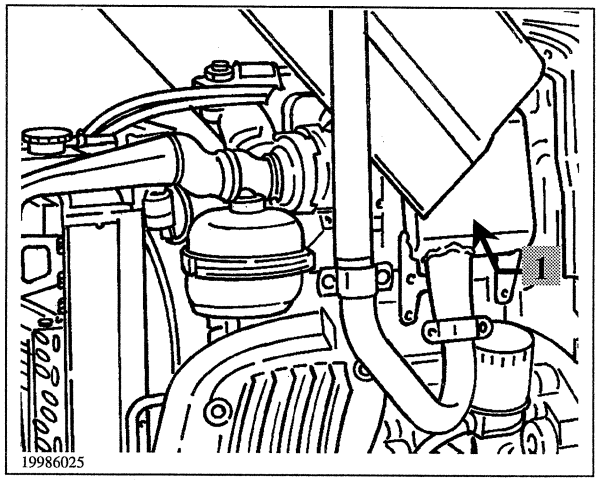

2 Notes

2 Engine

2.3 Electrical System

TN tractors use a single, **heavy-duty, 733 CCA, 88 Amp hour battery** located in front of the radiator for easy access. Mounting the battery where the air is cool and clean helps prolong life in addition to improving accessibility. A large battery, 3.4 HP (*2.5 Kw*) starter and easy starting engine combine to deliver excellent cold weather starting ability.

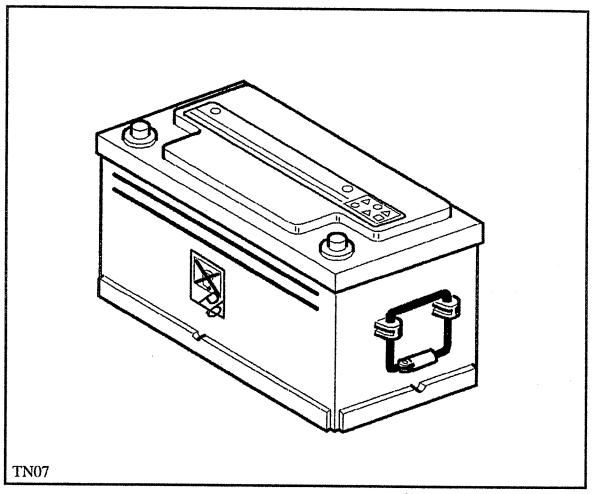
TN07

A high capacity **45-amp alternator** is used on each TN model. It delivers enough power to handle multiple after market accessories and all tractor system requirements.

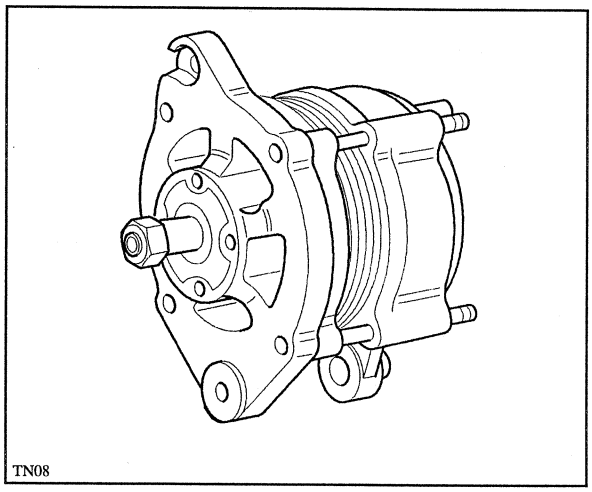
TN08

Thermostart cold weather starting aid is standard on all TN models for ensuring quick starts in the coldest of climates.

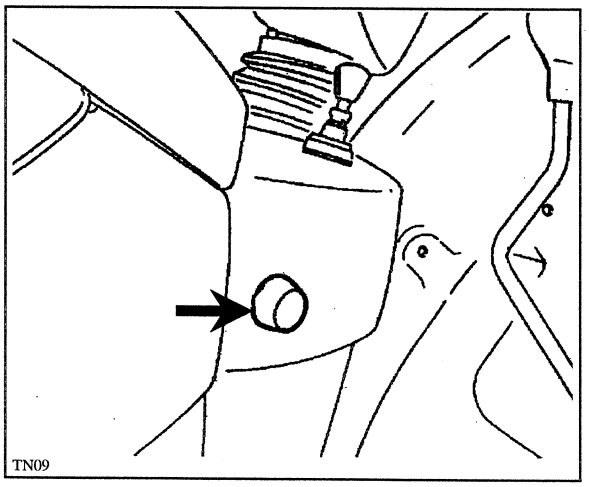
TN09