SERVICE MANUAL

411HT, 413S, 417HT

EN - 9813/2850 - ISSUE 3 - 11/2016

This manual contains original instructions, verified by the manufacturer (or their authorized representative).

Foreword

The Operator's Manual

You and others can be killed or seriously injured if you operate or maintain the machine without first studying the Operator's Manual. You must understand and follow the instructions in the Operator's Manual. If you do not understand anything, ask your employer or JCB dealer to explain it.

Do not operate the machine without an Operator's Manual, or if there is anything on the machine you do not understand.

Treat the Operator's Manual as part of the machine. Keep it clean and in good condition. Replace the Operator's Manual immediately if it is lost, damaged or becomes unreadable.

Contents

00 - General

Introduction

The exhaust system is used to guide exhaust gases away from the controlled combustion inside the engine by means of an exhaust pipe. Depending on the machine design, the exhaust gas may flow through the following components:

- Cylinder head and exhaust manifold.
- Turbocharger to increase the engine power (if installed).
- A catalytic converter or EGR (Exhaust Gas Recirculation) system to reduce air pollution (if installed).
- SCR (Selective Catalytic Reduction) (if installed). In SCR system exhaust gases pass through the DEF (Diesel Exhaust Fluid) injection chamber to lower the NOx (Nitrogen Oxide) concentration in the exhaust gases.
- A silencer or muffler to reduce noise (if installed).

The exhaust pipe carries the toxic and noxious gases away from the users of the machine. Note machines or generators that work indoors can quickly fill an enclosed space with carbon monoxide or other poisonous exhaust gases if they are not properly vented to the outdoors.

Health and Safety

Exhaust Gases

Machine exhaust gases can harm and possibly kill you or bystanders if they are inhaled. Do not operate the machine in closed spaces without making sure there is good ventilation. If possible, install an exhaust extractor. If you begin to feel drowsy, stop the machine at once and get into fresh air.

Sparks

Explosions and fire can be caused by sparks from the exhaust or the electrical system. Do not use the machine in closed areas where there is flammable material, vapour or dust.

Hazardous Atmospheres

This machine is designed for use in normal out door atmospheric conditions. It must not be used in an enclosed area without adequate ventilation. Do not use the machine in a potentially explosive atmosphere, i.e. combustible vapours, gas or dust, without first consulting your JCB dealer.

Hot Components

Touching hot surfaces can burn skin. The engine and machine components will be hot after the unit has been running. Allow the engine and components to cool before servicing the unit.

WARNING! *The engine has exposed rotating parts. Switch off the engine before working in the engine compartment. Do not use the machine with the engine cover open.*

Check (Condition)

Excessive smoke from the exhaust stack combined with a complaint of low power could be as a result of:

- Dirt or dust (unfiltered air) ingested directly into the engine, resulting in damage to the cylinder bores, there will also be a possible increase in oil consumption.
- Air leaks from the air hose connections.
- Exhaust manifold leaks.

03 - Inlet Manifold

Introduction

The inlet manifold (or intake manifold) supplies combustion air to the cylinders in compression ignition engines or the air/fuel mixture for spark ignition engines (except most direct injection spark ignition engines). Even distribution of the air or air/fuel is important to optimize the efficiency and performance of the engine.

The manifold is required to be air tight under pressure and vacuum conditions and can be required to provide mounting points for sensors, grid heaters, throttle bodies and other components depending on the engine type and specification.

Component Identification

Figure 344.

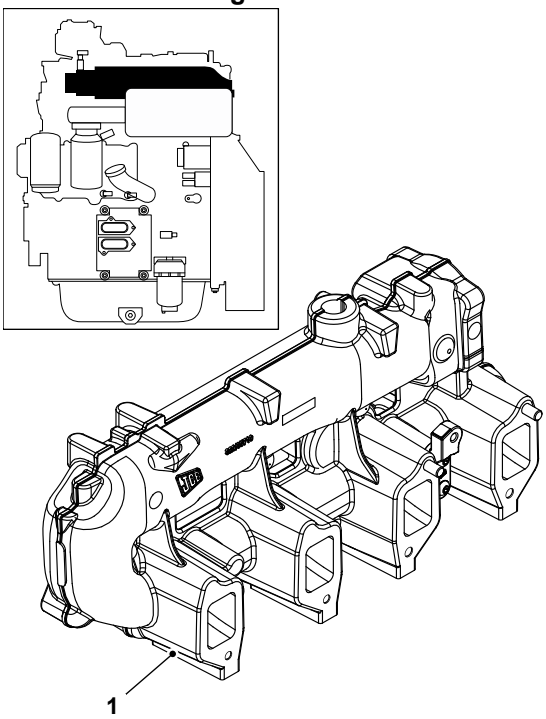

1 Inlet Manifold

Check (Condition)

1. Check the manifold mating faces for signs of damage and distortion.
2. Check the manifold casting for signs of cracks.
3. Renew the manifold if there are any signs of defect.

Remove and Install

Before Removal

1. This procedure requires service parts. Make sure you have obtained the correct service parts before you start, refer to Parts Catalogue.
2. Make sure that the engine is safe to work on. If the engine has been running, let it cool before you start the service work.
3. Get access to the engine.
4. Remove the fuel rail assembly. Refer to (PIL 18-18).

Figure 345.

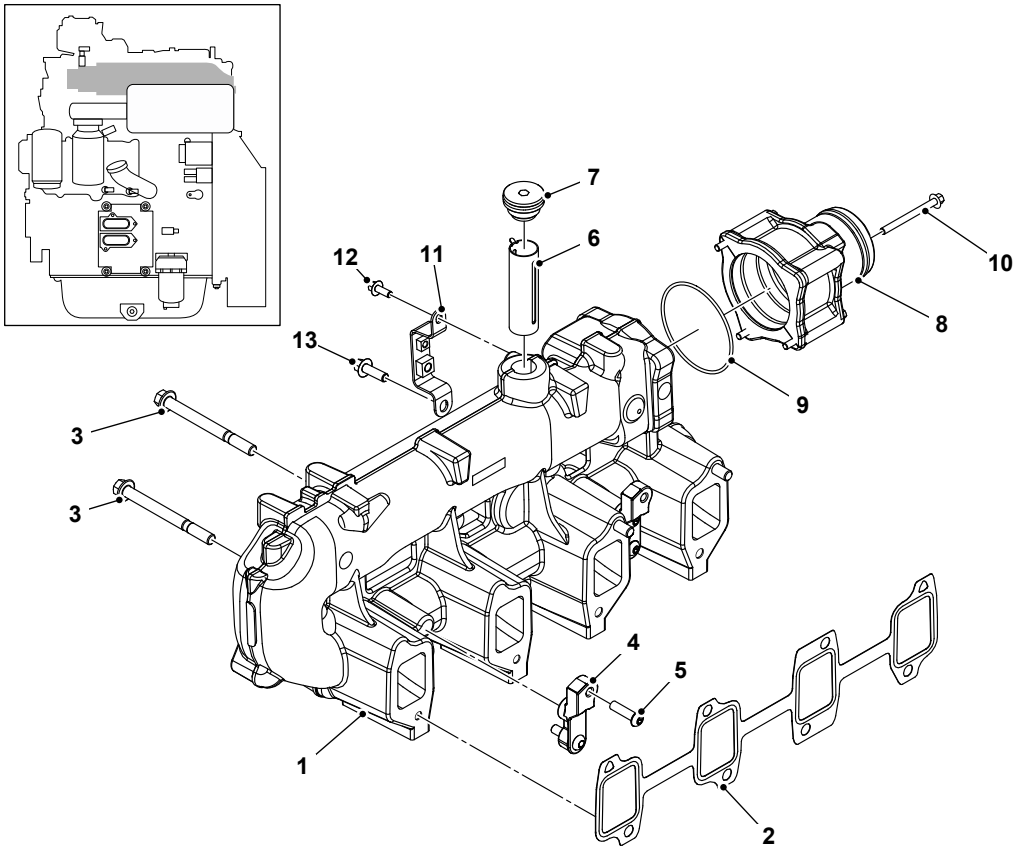

1 Inlet manifold
3 Flanged hexagon bolt (x8)
5 Screw (x4)
7 EGR Plug
9 Throttle O-ring
11 Inlet manifold bracket
13 Bolt M8 x 25mm (x1)
2 Manifold gasket
4 Fuel rail mount
6 EGR (Exhaust Gas Recirculation) mixer tube
8 Inlet manifold adaptor / throttle valve (not shown)
10 Flanged hexagon bolt (x4)
12 Bolt M6 x 16mm (x1)

Remove

1. Disconnect the TMAP (Temperature Manifold Air Pressure) sensor electrical connector.
2. Disconnect the air inlet hose.
3. Remove the bolts 3 and lift the inlet manifold from the cylinder head. Discard the gasket.
4. Cap the inlet ports with blanking caps to prevent ingress of dirt.
5. Inspect the manifold, refer to Check Condition (PIL 18-24).

Install

1. The installation procedure is the opposite of the removal procedure. Additionally do the following steps.
2. Renew the manifold gasket.
3. Loosely assemble the manifold, together with the new inlet gasket to the cylinder head, use the two bolts (one at each end).
4. With the manifold and gasket in position, install the remaining six bolts.
5. Tighten the bolts to the correct torque value.

Table 148. Torque Values

Item	Nm
3	43

04 - Outlet Manifold

Introduction

The exhaust outlet manifold collects the exhaust gases from the multiple cylinders and deliver it to the turbocharger (if installed) or the exhaust pipe.

Component Identification

Figure 346.

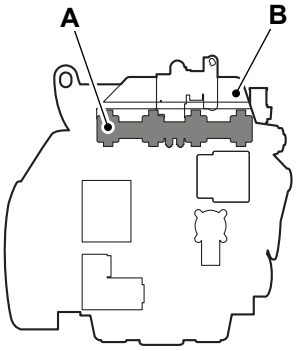

A Exhaust manifold
B Manifold gasket and heat shield

Check (Condition)

1. Check the manifold mating faces for signs of damage and distortion.
2. Check the manifold casting for signs of cracks.
3. Renew the manifold if there are any signs of defect.
4. Visually inspect for leaks at the exhaust manifold. Make sure all gaskets are in good condition, replace as required.

Remove and Install

Before Removal

1. This procedure requires service parts. Make sure you have obtained the correct service parts before you start, refer to Parts Catalogue.
2. Make sure that the engine is safe to work on. If the engine has been running, let it cool before you start the service work.
3. Get access to the engine.
4. Disconnect the oil pipes to the turbocharger, refer to (PIL 18-36).

Figure 347.

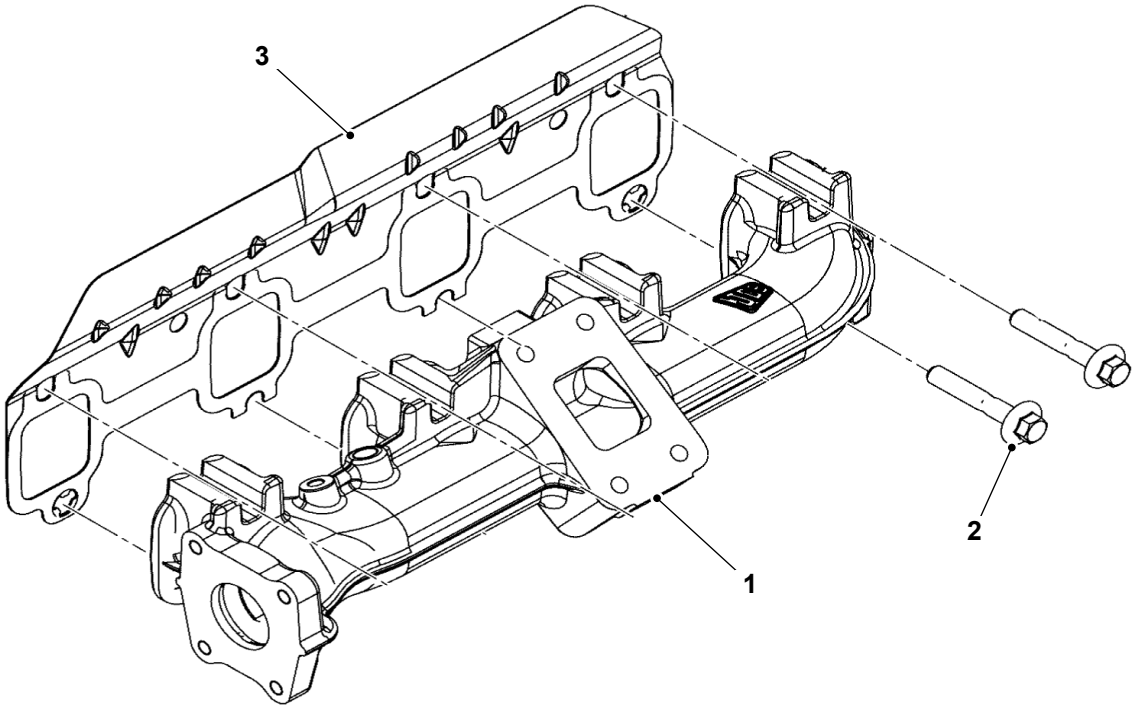

1 Exhaust manifold
3 Manifold gasket

2 Fixing bolts M10 x 57mm (x8)

Remove

1. Remove the upper four bolts.
2. Loosen the lower four bolts and lift the exhaust manifold from the cylinder head. Remove the bolts and discard the gasket.
3. Cap the exhaust ports to prevent ingress of dirt.
4. Inspect the manifold, refer to Check Condition (PIL 18-24).

Install

1. The installation procedure is the opposite of the removal procedure. Additionally do the following steps.
2. Renew the manifold gasket.
3. Install the lower four bolts, together with the new exhaust gasket to the cylinder head (screw in the bolts approximately to a length of 8 mm).
4. Rest the manifold in position on the row of lower bolts by locating the slots, then install the remaining four upper bolts.
5. Tighten the bolts to the correct torque value. Refer to Torque and Angle Tightening procedure (PIL 72-00).

After Installation

1. Reconnect the oil pipes to the turbocharger (if installed).

2. Install the exhaust pipe and the silencer box.
3. Start the engine and check for exhaust leaks.

Table 149. Torque Table

Item	Torque Value (Nm)	Torque Angle (Degrees)
2 (First Stage)	25	
2 (Final Stage)		+90

00 - General

Introduction

The turbocharger (turbo) is a turbine driven forced induction device that makes an engine more efficient and helps to produce more power for its size.

Engine exhaust gasses drive a turbine, which in turn drives a compressor via a common shaft. The shaft bearings are lubricated by a feed from the engine lubrication system.

A turbocharged engine is more powerful and efficient than a naturally aspirated engine because the turbine forces more air, and proportionately more fuel, into the combustion chamber than atmospheric pressure alone.

Component Identification

Figure 357.

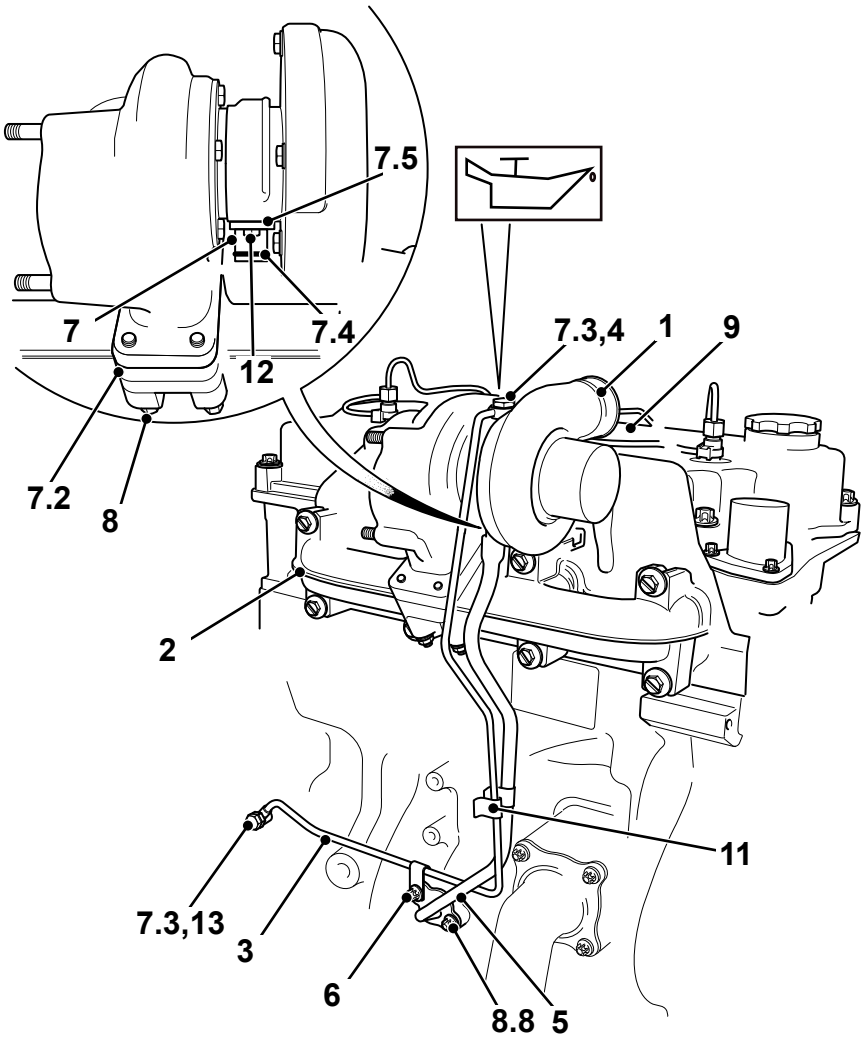

1 Turbocharger
2 Exhaust manifold
3 Oil feed pipe (turbo bearing)
4 Banjo bolts M12
5 Oil drain pipe (turbo bearing)
6 Fixing bolts (x2)
7 Pipe adaptor (oil drain connection)
8 Retaining nuts (x4)
11 Pipe clip
12 Bolt - pipe adaptor (oil drain connection)
13 Banjo bolts M16

Operation

The single stage exhaust turbocharger is installed on this machine. On this turbocharger the electronically controlled wastegate valve controls the charge air pressure. The electronically controlled wastegate valve does the following functions:

- It permits the adjustment of optimum charge air pressure throughout the full load range
- It takes other system factors into account which influence the exhaust gas and charge air flow. These are mentioned below:
    - exhaust gas recirculation
    - charge-air cooling
    - exhaust brake
    - temperature and pressure of intake air
    - fuel injection data
- It improves the engine torque characteristics across the full engine speed range, particularly for low engine speeds
- It reduces fuel consumption
- It reduces pollutant emissions

Check (Condition)

1. Visually inspect for leaks at the turbocharger. Make sure all gaskets are in good condition, replace as required.
2. Check the turbine and compressor blades inside the turbocharger rotate freely and smoothly by hand. If the blades are stiff to turn, or damaged the turbocharger must be replaced.
3. Make sure that the oil feed pipe and oil drain pipe are clear and free from debris and sludge.
4. Check the turbine shaft running clearance.
    4.1. Place the stylus of a DTI (Dial Test Indicator) against the shaft.
    4.2. Move the shaft sideways.

Figure 358.

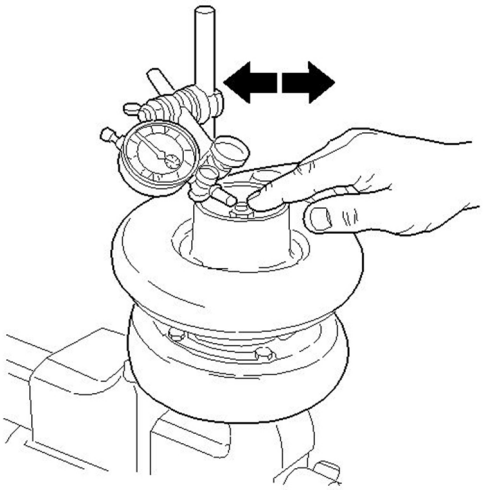

    4.3. Make sure that the turbine shaft running clearance is within the specified limits. Refer to Turbocharger, Technical Data (PIL 18-35).
5. Check the shaft end float.
    5.1. Place the stylus of the DTI against the end of the shaft.