E0446 0215A200A 1

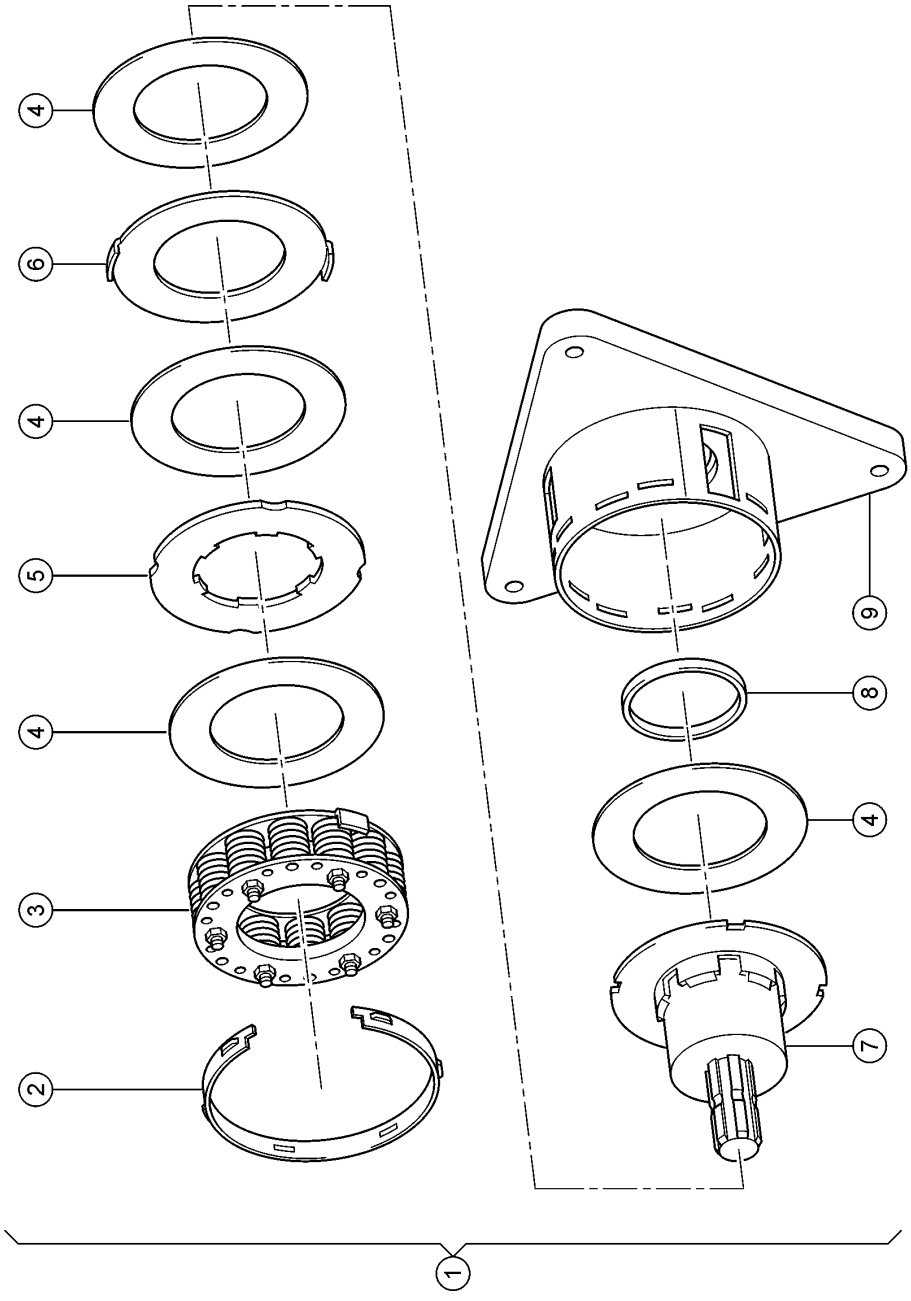

200 OVERLOAD CLUTCH 1)

Pos.	Part No.	Description	Dimension	Quantity	Conditions
1	**00 0855 871 1**	FRICTION CLUTCH		1	
2	**00 0828 171 0**	ADJUSTING RING		1	
3	**00 0863 292 0**	SPRING KIT		1	
4	**00 0828 173 0**	FRICTION PLATE		4	
5	**00 0828 174 0**	DRIVE PLATE		1	
6	**00 0828 175 0**	DRIVE PLATE		1	
7	**00 0863 293 0**	HUB		1	
8	**00 0941 110 0**	RING		1	
9	**00 0833 496 1**	CLUTCH HOUSING		1	

1)	**machine no.**	+ up to J3000147

E0446 0215A200B 1

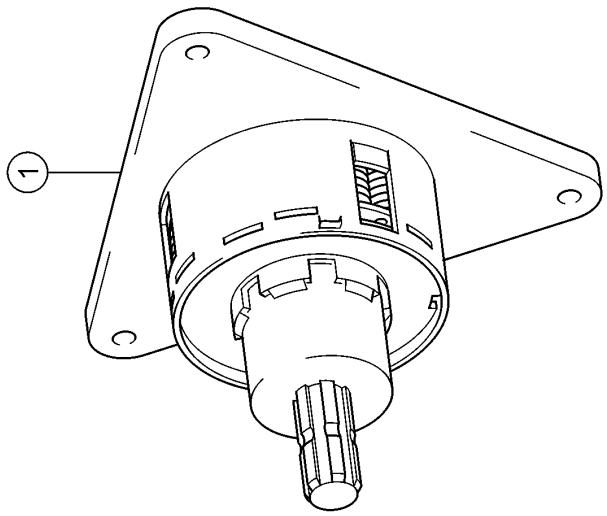

200 OVERLOAD CLUTCH 1)

Pos.	Part No.	Description	Dimension	Quantity	Conditions
1	**00 1351 606 0**	FRICTION CLUTCH		1	

1) machine no. + from J3000148

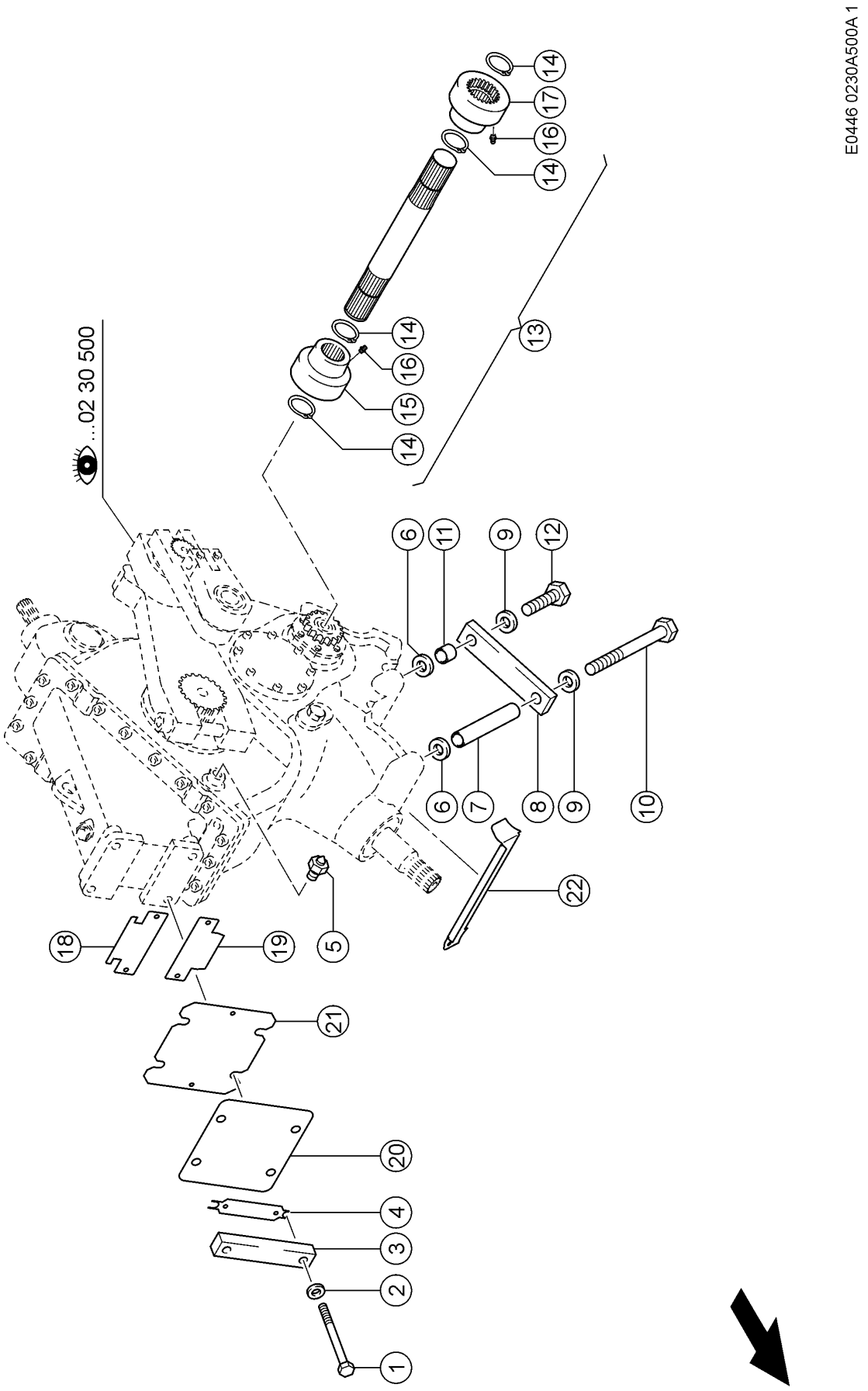
E0446 0230A500A 1
...02 30 500
14
17
16
14
14
16
15
14
13
6
11
9
12
6
7
8
9
10
22
18
19
5
21
20
4
3
2
1

500 MAIN GEARBOX

Pos.	Part No.	Description	Dimension	Quantity	Conditions
1	**00 0219 879 0**	HEXAGON HEAD SCREW	M20X170	4	
2	**00 0212 191 0**	CONTACT WASHER	A20	5	
3	**00 1327 478 0**	PLATE	30X70X260	2	
5	**00 0863 906 0**	HEXAGON HEAD SCREW	HEX19 L=28	1	
6	**00 0941 007 1**	SHIM	25X 35X 1	1	
7	**00 0855 828 0**	SPACER TUBE	D27X35X181,5	2	
8	**00 0855 180 1**	PLATE	30X70X260	2	
9	**00 0217 026 0**	CONTACT WASHER	A 24	4	
10	**00 0219 878 0**	HEXAGON HEAD BOLT	M24X260X60	2	
11	**00 0855 829 0**	SPACER TUBE	D27X35X21,5	2	
12	**00 0219 877 0**	HEXAGON HEAD SCREW	M24X90	2	
13	**00 0855 315 0**	CONNECTING SHAFT		1	
14	**00 0212 111 0**	CIRCLIP	50X3	4	
15	**00 1327 538 0**	SLEEVE	Z=22 M=3,75	1	
16	**00 0179 838 0**	GREASE NIPPLE	A M8X1	2	
17	**00 1327 539 0**	SLEEVE	Z=21 M=3,75	1	
18	**00 0867 504 1**	SHIM PLATE	1X92X210	1	
19	**00 0865 934 1**	SHIM	1X90X210	1	
20	**00 1327 468 0**	PLATE	260X300X3	1	
21	**00 1327 467 1**	SHIM	1X260X300	1	
22	**00 1351 496 0**	SHIM PLATE	0,5X327,6X83	1	1)

1)	**machine no.**	+ from J3000148

E0446 0230A500A 2

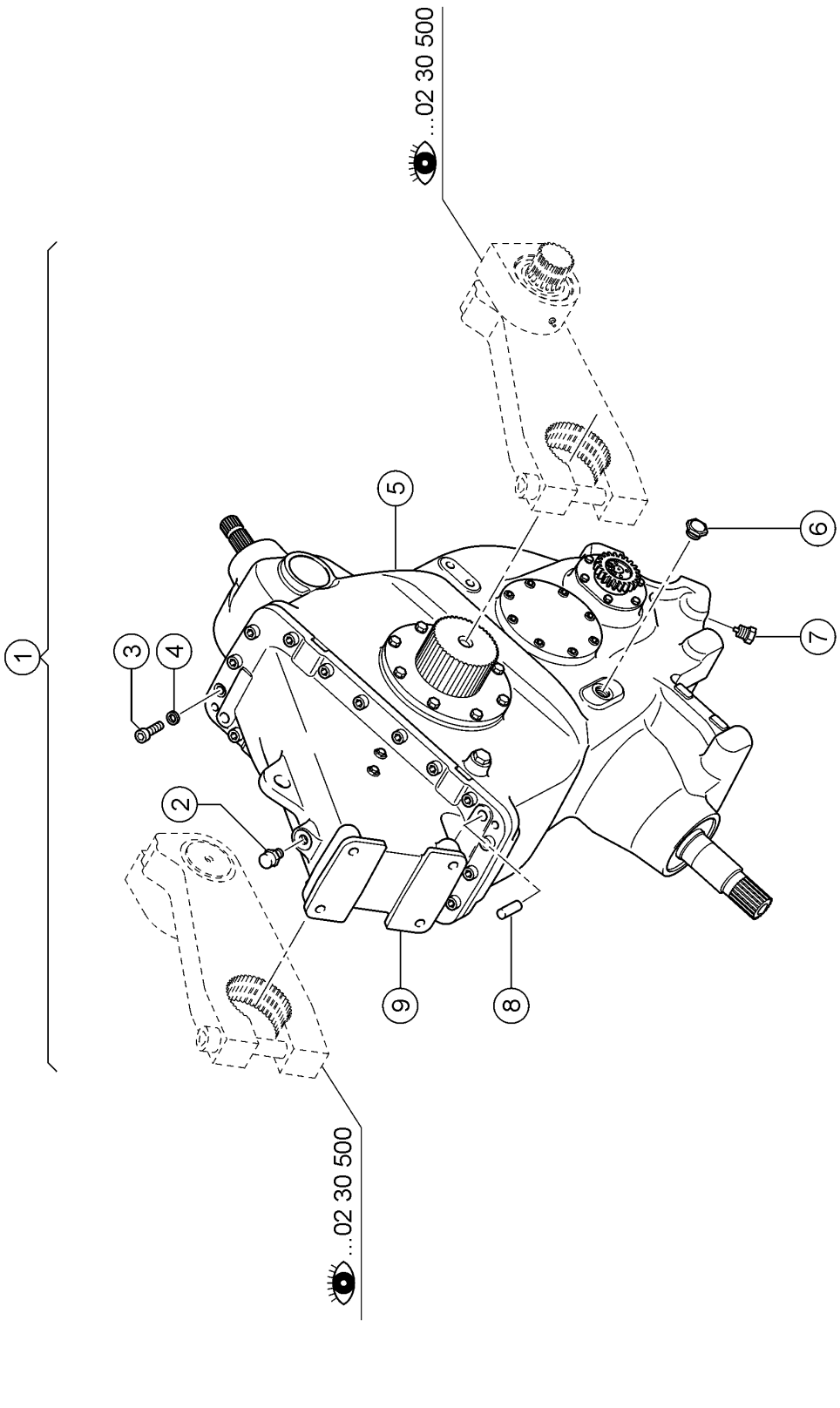

500 MAIN GEARBOX

Pos.	Part No.	Description	Dimension	Quantity	Conditions
1	**00 1335 347 1**	MAIN GEARBOX	I=19,5	1	
2	**00 0841 823 0**	FILTER	A-M24X2	1	
3	**00 0863 253 0**	SOCKET HEAD SCREW	M16X55-DKMAX 24,3	18	
4	**00 0863 255 0**	LOCK WASHER	S16 -17X24X1,3	18	
5	**00 1351 588 0**	GEARBOX HOUSING		1	
6	**00 0863 269 0**	OIL INDICATEUR	A-M24X2	1	
7	**00 0850 563 0**	MAGNETIC FILTER BOLT	M24X2	1	
8	**00 0863 262 0**	CYLINDRICAL PIN	20X60	2	
9	**00 1351 587 0**	COVER		1	

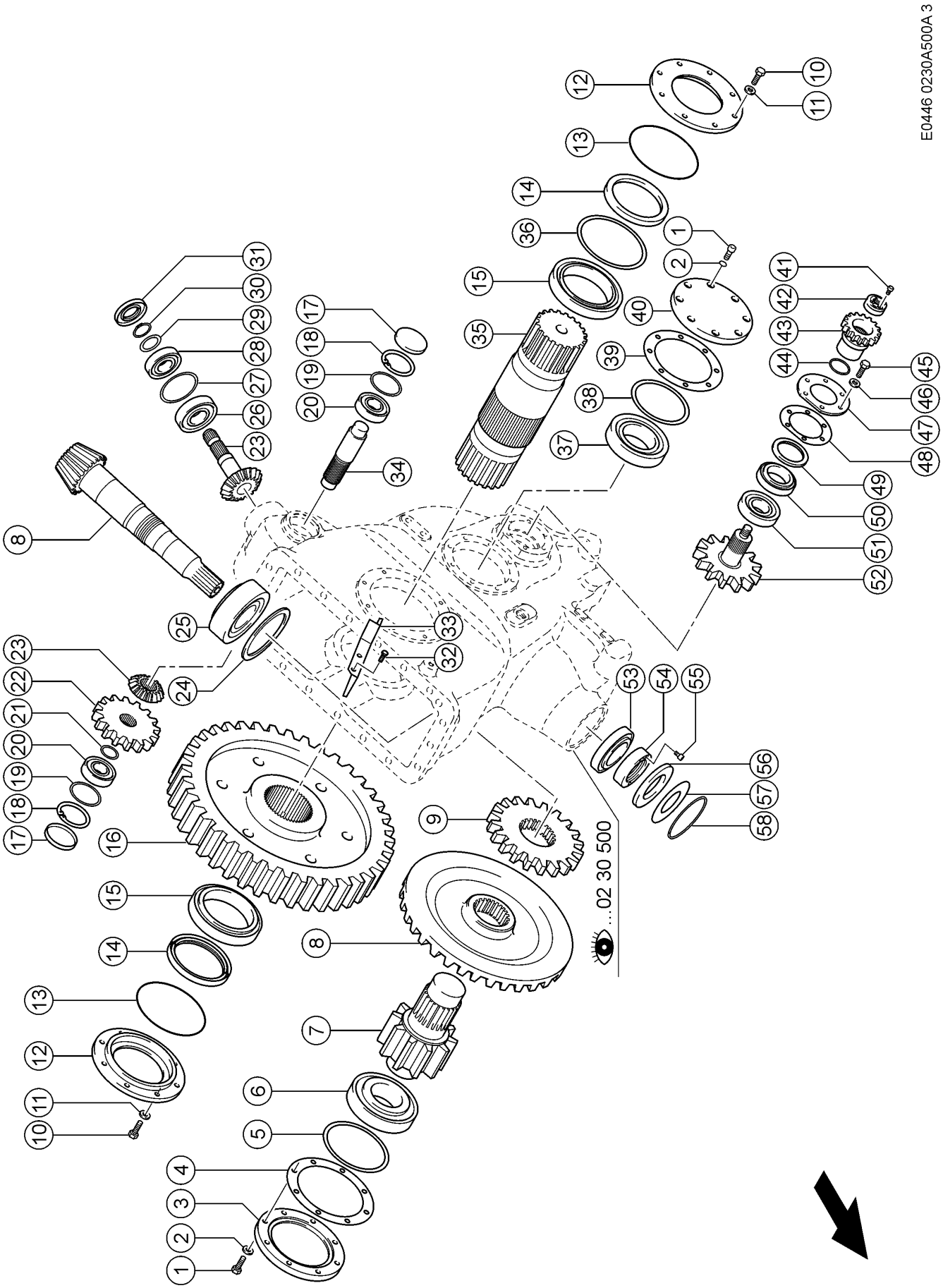
E0446 0230A500A 3
...02 30 500

500 MAIN GEARBOX

Pos.	Part No.	Description	Dimension	Quantity	Conditions
1	**00 0219 994 0**	SOCKET HEAD SCREW	M12X 30	16	
2	**00 0850 138 0**	LOCK WASHER		16	
3	**00 0863 250 0**	COVER	D170	1	
4	**00 0833 857 0**	GASKET	226X170X0.2	1	
5	**00 0850 133 0**	SPACER		1	
6	**00 0863 264 0**	TA.ROLLER BEARING	80X170X42,5	1	
7	**00 0863 240 0**	SPUR GEAR	Z=10 ; M=13,5	1	
8	**00 1351 592 0**	BEVEL GEAR SET	R=0.2	1	1)
9	**00 0863 275 0**	SPUR GEAR	Z=30 ; M=8,25	1	
10	**00 0850 648 0**	SCREW	M12X35X1.75 10.9	16	
11	**00 0850 136 0**	LOCK WASHER		16	
12	**00 1351 593 0**	COVER	D200	2	
13	**00 1351 594 0**	O-RING	264-190,09X3,53-N	2	
14	**00 0219 520 0**	SHAFT SEAL	AS 130X160X12	2	
15	**00 0218 592 0**	TA.ROLLER BEARING	32026X- 130X200X45	2	
16	**00 1351 590 0**	SPUR GEAR	Z=39 ; M=13,5	1	
17	**00 0863 267 0**	LOCK CAP	D80X10	2	
18	**00 0214 263 0**	CIRCLIP	80X4,0	2	
19	**00 0850 580 0**	SHIM	69,3X79,7 = 8 TEILE	2	
20	**00 0239 220 0**	GRVD.BALL BEARING	6307-2RS*-C3	2	
21	**00 0850 578 0**	SPACER RING		1	
22	**00 0841 164 0**	SPUR GEAR		1	
23	**00 1351 578 0**	PINION SHAFT	R=0,77	1	1)
24	**00 0863 261 0**	SPACER	I160	1	
25	**00 0217 849 0**	TA.ROLLER BEARING	323 15B J2 Q CL7C	1	
26	**00 0233 281 0**	GRVD.BALL BEARING	6208-2RS*-C4	1	
27	**00 1327 349 0**	SLEEVE		1	
28	**00 0233 281 0**	GRVD.BALL BEARING	6208-2RS*-C4	1	2)
28	**00 0244 289 0**	GRVD.BALL BEARING	6308-2RS*	1	3)
29	**00 0850 579 0**	SPACER RING		1	
30	**00 0244 058 0**	CIRCLIP	40X2,5	1	
31	**00 0213 411 0**	ROTARY SHAFT SEAL	AS 40X 80X10	1	
32	**00 0233 243 0**	HEXAGON HEAD BOLT	M08X25-MKL	2	
33	**00 1351 597 0**	OELFUEHRUNG		1	
34	**00 0841 165 0**	SHAFT		1	
35	**00 1351 589 0**	SHAFT		1	
36	**00 1351 580 0**	SPACER		1	
37	**00 0243 679 0**	TA.ROLLER BEARING	32217- 85X150X38,5	1	
38	**00 0850 581 0**	SPACER	133,4X149,7=4TEILE	1	
39	**00 0850 568 0**	GASKET	150X206X0.2	1	
40	**00 0863 251 0**	COVER	D150	1	
41	**00 0850 140 0**	SCREW		2	
42	**00 0850 559 0**	RING	M20X1.5	1	
43	**00 0863 243 0**	SPUR GEAR	Z=22 ; M=3,75	1	
44	**00 0850 561 0**	O-RING		1	
45	**00 0233 243 0**	HEXAGON HEAD BOLT	M08X25-MKL	6	
46	**00 0235 132 1**	SPRING WASHER	8 -8,1X14,8X1,6	6	
47	**00 0850 555 0**	COVER		1	
48	**00 0850 565 0**	GASKET	101X140X0.2	1	
49	**00 0846 509 0**	SHAFT SEAL	BA 68X90X7	1	
50	**00 0850 570 0**	BEARING		1	
51	**00 0238 197 0**	TA.ROLLER BEARING	30309- 45X100X27,25	1	
52	**00 0863 274 0**	SPUR GEAR	Z=13 ; M=8,25	1	

500 MAIN GEARBOX

Pos.	Part No.	Description	Dimension	Quantity	Conditions
53	**00 0243 663 0**	TA.ROLLER BEARING	302 14 - 70X125X26,25	1	
54	**00 0850 577 0**	CLAMPING RING	M70X2	1	
55	**00 0310 812 0**	SOCKET HEAD SCREW	M 8X 16	2	
56	**00 0863 266 0**	SHAFT SEAL	BA 65X125X12	1	
57	**00 0863 249 0**	LOCK WASHER	D66X125,5X2	1	
58	**00 0863 260 0**	RING	M2300-1250 DM125	1	

1)	**Remarks**	set
2)	**machine no.**	+ from J3000016
3)	**machine no.**	+ up to J3000015

E0446 0230A500A 4

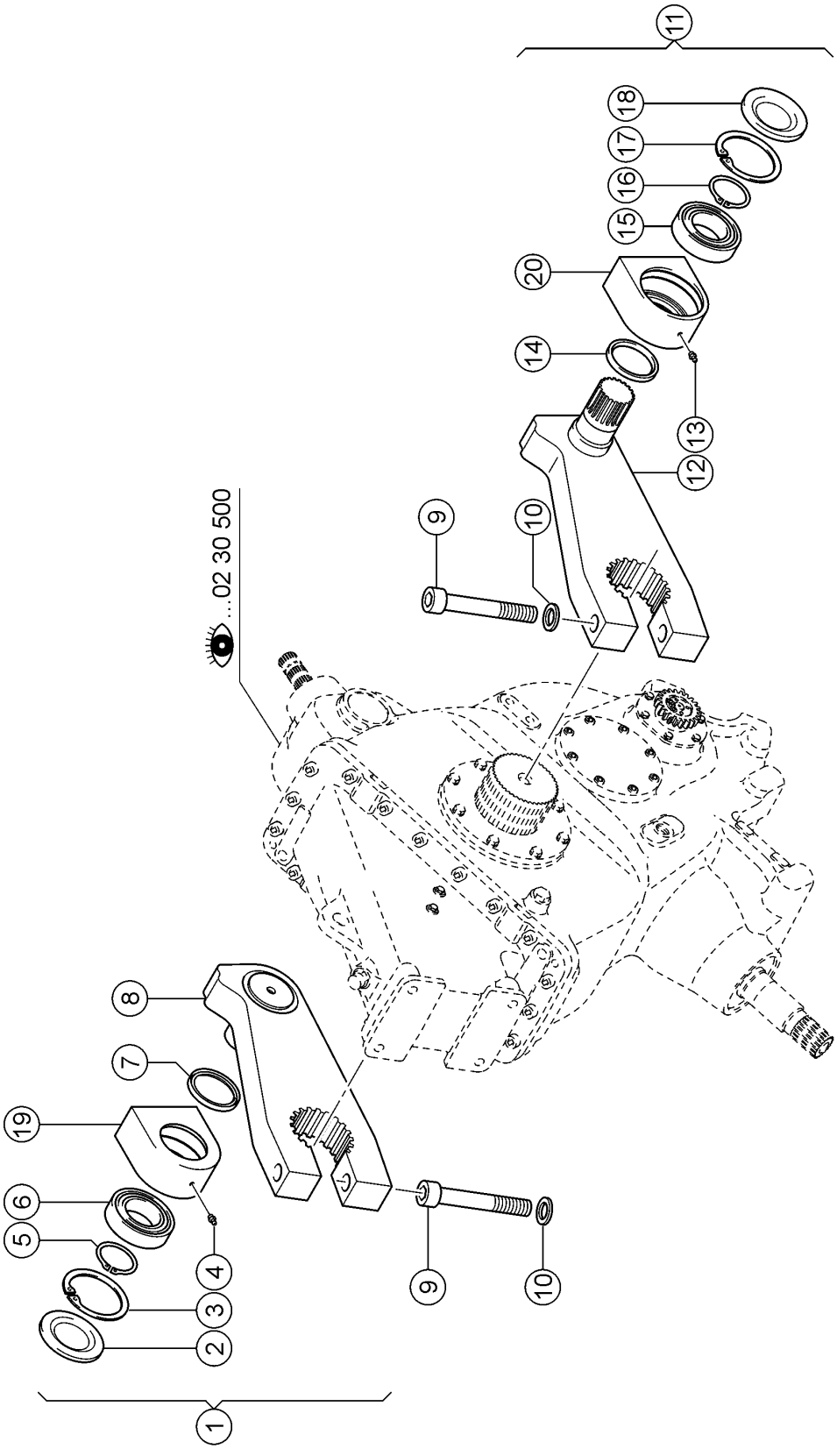

500 MAIN GEARBOX

Pos.	Part No.	Description	Dimension	Quantity	Conditions
1	**00 1351 572 0**	CRANK		1	
2	**00 0863 268 0**	LOCK CAP	D125X10	1	
3	**00 0243 064 0**	CIRCLIP	125X4	1	
4	**00 0179 838 0**	GREASE NIPPLE	A M8X1	1	
5	**00 0235 172 0**	CIRCLIP	70X2,5	1	
6	**00 0243 618 0**	SPHERICAL ROLLER BEARING	22214 EAW33	1	
7	**00 0233 932 0**	SHAFT SEAL	AS 80X100X10	1	
8	**00 1351 573 0**	CRANK		1	
9	**00 1351 574 0**	SOCKET HEAD SCREW	M30X220 12.9	2	
10	**00 0863 257 0**	LOCK WASHER	S30	2	
11	**00 1351 595 0**	CRANK		1	
12	**00 1351 596 0**	CRANK		1	
13	**00 0179 838 0**	GREASE NIPPLE	A M8X1	1	
14	**00 0233 932 0**	SHAFT SEAL	AS 80X100X10	1	
15	**00 0243 618 0**	SPHERICAL ROLLER BEARING	22214 EAW33	1	
16	**00 0235 172 0**	CIRCLIP	70X2,5	1	
17	**00 0243 064 0**	CIRCLIP	125X4	2	
18	**00 0863 268 0**	LOCK CAP	D125X10	2	
19	**00 0863 247 0**	BEARING BOX	D125	1	
20	**00 0833 850 0**	BEARING BOX	D125	1	

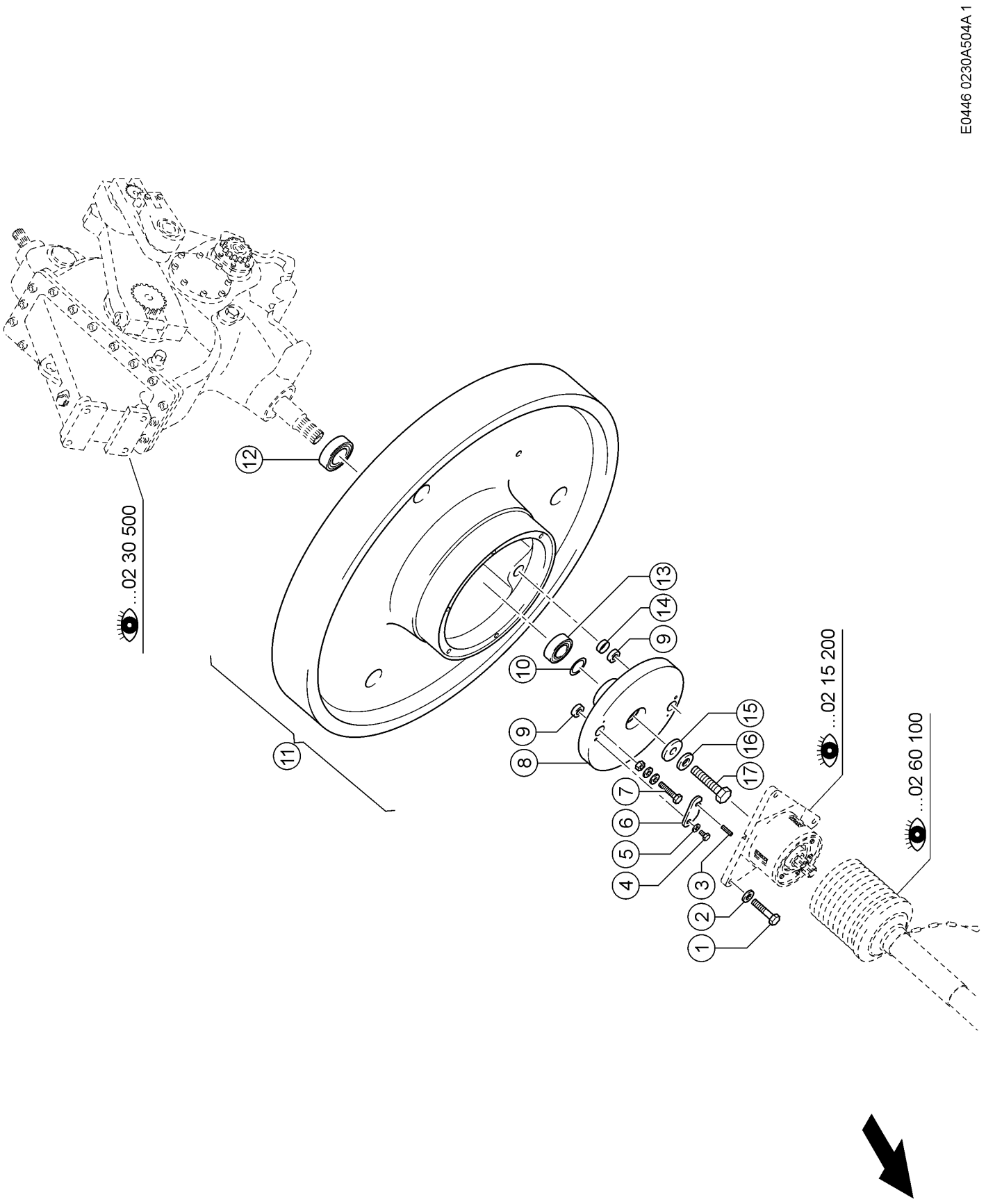
E0446 0230A504A 1
...02 30 500
...02 15 200
...02 60 100
1
2
3
4
5
6
7
8
9
9
10
11
12
13
14
15
16
17

504 FLYWHEEL

Pos.	Part No.	Description	Dimension	Quantity	Conditions
1	**00 0215 423 0**	HEXAGON HEAD BOLT	M12X45-MKL	3	
2	**00 0239 389 0**	CONTACT WASHER	A12	3	
3	**00 0235 631 0**	SPRING PIN	4 X 16	1	
4	**00 0237 439 0**	HEXAGON HEAD BOLT	M8X16	1	
5	**00 0239 387 0**	CONTACT WASHER	A8-8,2X18X1,4	1	
6	**00 0833 576 0**	PLATE	2X27.8X74.1	1	
7	**00 0219 989 0**	HEXAGON HEAD BOLT	M 8X45	1	
7	**00 0239 387 0**	CONTACT WASHER	A8-8,2X18X1,4	2	
7	**00 0238 132 0**	LOCK NUT	M8	1	
8	**00 0855 317 0**	COUPLER		1	1)
9	**00 0826 219 0**	SHEAR BUSHING	D30X12,3	2	
10	**00 0234 432 0**	SHIM	50X62X1	1	
11	**00 1345 050 0**	FLYWHEEL		1	2)
12	**00 0213 991 0**	GRVD.BALL BEARING	6212-2RS*	1	
13	**00 0233 570 1**	GRVD.BALL BEARING	6210-2RS* 50X90X20	1	
14	**00 1335 439 1**	SHEAR BUSHING	30*12.3	1	
15	**00 0832 017 1**	WASHER	60X21X10	1	
16	**00 0212 191 0**	CONTACT WASHER	A20	1	
17	**00 0212 310 0**	HEXAGON HEAD BOLT	M20X1,5X 65	1	

1)	**Remarks**	with Item 9
2)	**Remarks**	with Item 12, 13

Thank you so much for reading.

Please click the “Buy Now!” button below to download the complete manual.

After you pay.

You can download the most perfect and complete manual in the world immediately.

Our support email:

ebooklibonline@outlook.com