E0473 0102A010A 1

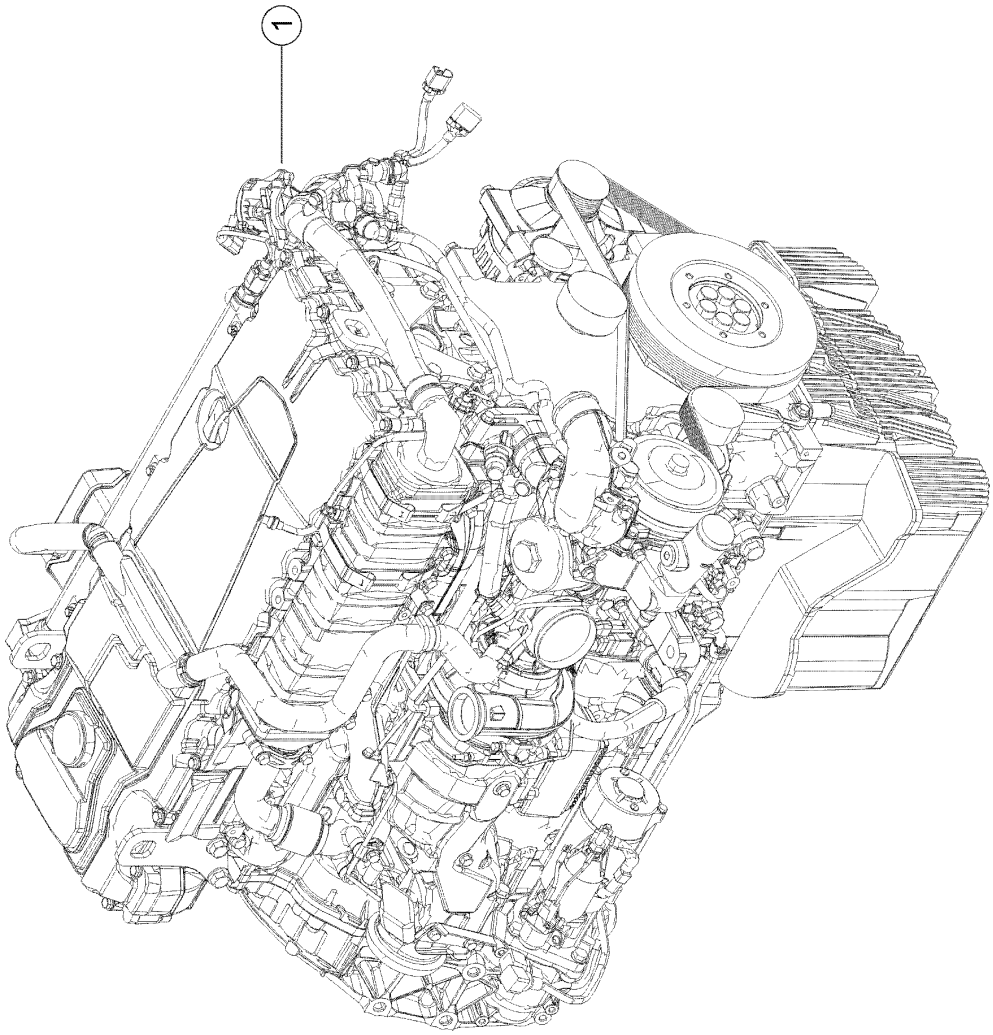

010 COMPLETE ENGINE 1)

Pos.	Part No.	Description	Dimension	Quantity	Conditions
1	**00 0781 439 4**	ENGINE	OM936LA 210KW STAGE IV	1	2)
1	**00 1984 951 0**	ENGINE	REMAN OM 936 LA 210KW IV	1	3)
1	**00 0781 435 4**	ENGINE	OM936LA 210KW STAGE IV	1	4)
1	**00 1984 949 0**	ENGINE	REMAN OM 936 LA 210KW IV	1	5)

1) Equipment

MD_P02_0782	Mercedes Benz OM936 LA - 210 kW/286 hp (T4)
MD_P02_0783	Mercedes-Benz OM936 LA - 210 kW/286 hp (T4) with air compressor

2) Equipment

MD_P02_0782	Mercedes Benz OM936 LA - 210 kW/286 hp (T4)

3) Equipment

MD_P02_0782	Mercedes Benz OM936 LA - 210 kW/286 hp (T4)

Remarks

Exchange / Reman

4) Equipment

MD_P02_0783	Mercedes-Benz OM936 LA - 210 kW/286 hp (T4) with air compressor

5) Equipment

MD_P02_0783	Mercedes-Benz OM936 LA - 210 kW/286 hp (T4) with air compressor

Remarks

Exchange / Reman

E0473 0102A010B 1

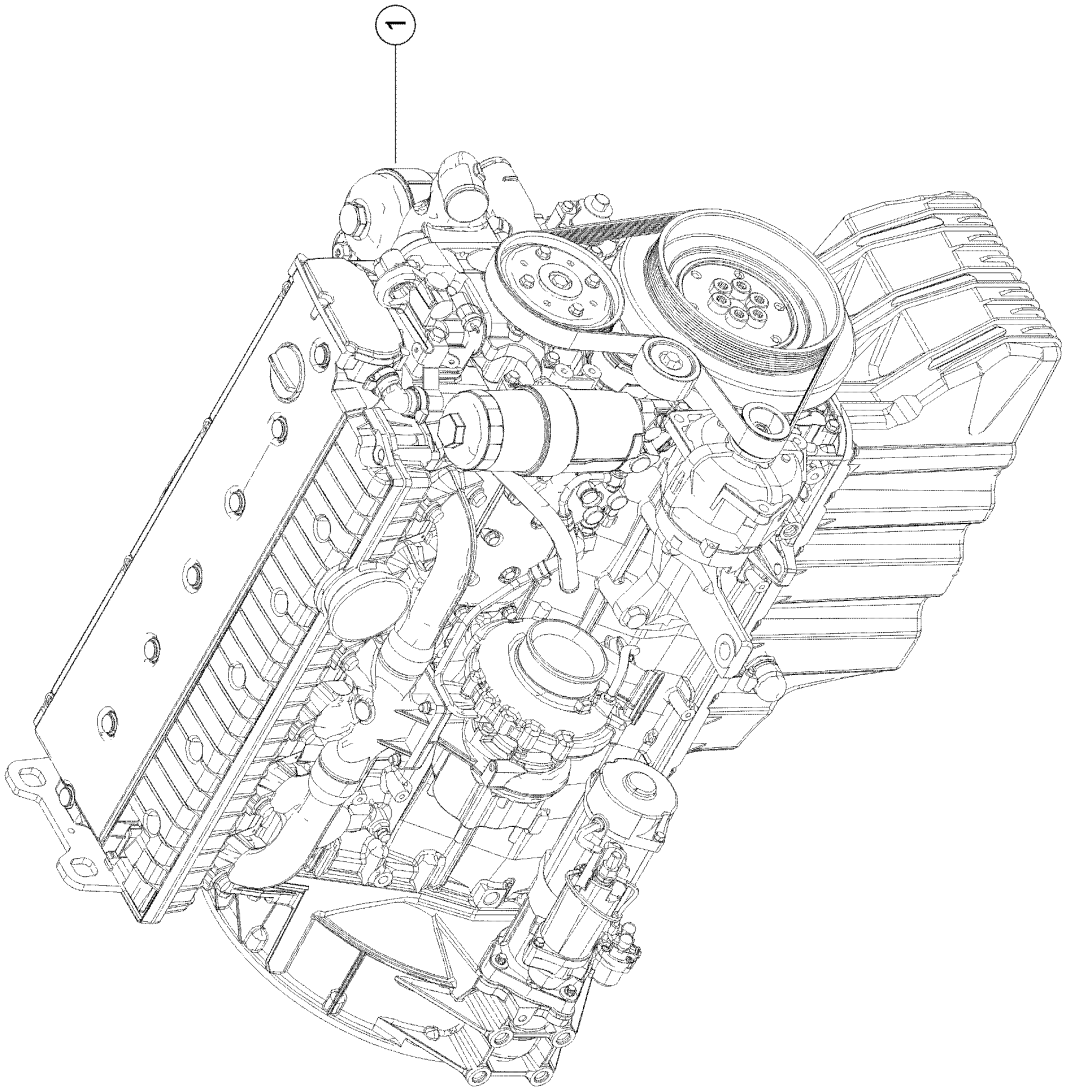

010 COMPLETE ENGINE 1)

Pos.	Part No.	Description	Dimension	Quantity	Conditions
1	**00 0773 715 0**	ENGINE	OM906LA 205KW TIER3	1	2)
1	**00 0773 716 0**	ENGINE	OM906LA 205KW TIER3	1	3)

1) Equipment

MD_P02_0725	OM906LA ECE R120 205 kW@2200 rpm Tier 3 / Stage IIIA
MD_P02_0726	OM906LA DL compr. ECE R120 205 kW@2200 rpm Tier 3 / Stage IIIA

2) Equipment

MD_P02_0725	OM906LA ECE R120 205 kW@2200 rpm Tier 3 / Stage IIIA

3) Equipment

MD_P02_0726	OM906LA DL compr. ECE R120 205 kW@2200 rpm Tier 3 / Stage IIIA

E0473 0105A100A 1

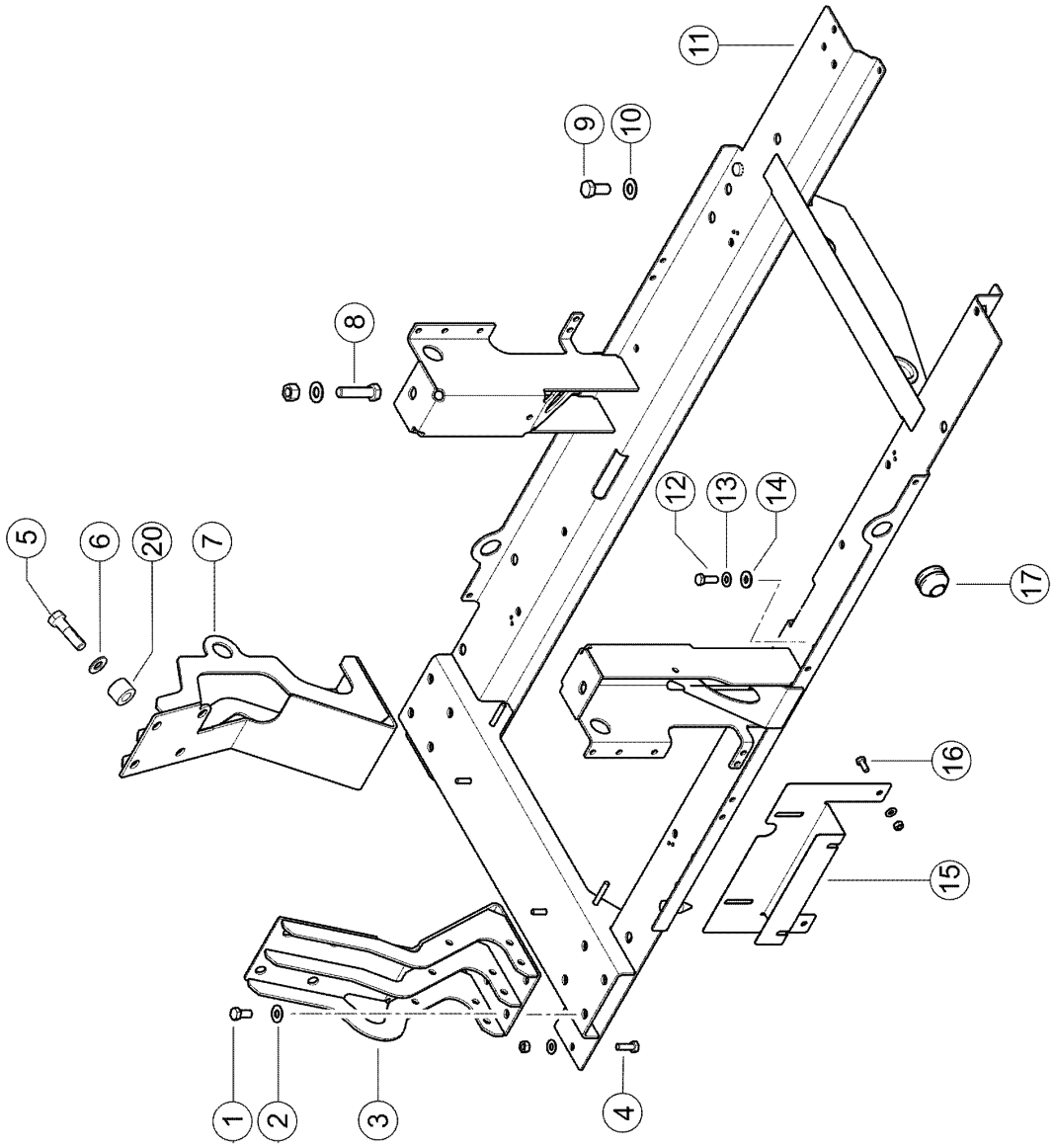

100 ENGINE SUSPENSION 1)

Pos.	Part No.	Description	Dimension	Quantity	Conditions
1	**00 0236 056 0**	HEXAGON HEAD BOLT	M12X25	8	
2	**00 0239 389 0**	CONTACT WASHER	A12	8	
3	**00 0781 158 4**	SUPPORT	MTU OM936LA RE	1	
4	**00 0237 453 0**	HEXAGON HEAD BOLT	M10X30	1	
4	**00 0239 388 0**	CONTACT WASHER	A10-10,2X22,25X1,6	1	
4	**00 0236 171 0**	HEXAGONAL NUT	M10	1	
5	**00 1035 828 1**	HEXAGON HEAD BOLT	M16X60	7	
6	**00 0239 391 0**	CONTACT WASHER	A16	7	
7	**00 0781 155 3**	SUPPORT	MTU TIER4F OM936LA LI	1	
8	**00 0233 095 0**	HEXAGON HEAD BOLT	M16X65	2	
8	**00 0239 391 0**	CONTACT WASHER	A16	2	
8	**00 0236 173 0**	HEXAGONAL NUT	M16	2	
9	**00 0236 230 0**	HEXAGON HEAD BOLT	M16X35	5	
10	**00 0239 391 0**	CONTACT WASHER	A16	5	
11	**00 0773 788 4**	ENGINE MOUNTING		1	
12	**00 0237 453 0**	HEXAGON HEAD BOLT	M10X30	2	
13	**00 0239 388 0**	CONTACT WASHER	A10-10,2X22,25X1,6	2	
14	**00 0234 326 0**	WASHER	11X26X3	2	
15	**00 0781 297 3**	SUPPORT	2X207X376,2	1	
16	**00 0236 200 0**	HEXAGON HEAD BOLT	M8X20	2	
16	**00 0239 387 0**	CONTACT WASHER	A8-8,2X18X1,4	2	
16	**00 0236 170 0**	HEXAGONAL NUT	M8	2	
17	**00 0734 779 0**	CABLE RING	C 20-35X50X2	1	
20	**00 2598 063 0**	SLEEVE	D35X25	7	

1) Equipment

MD_P02_0782	Mercedes Benz OM936 LA - 210 kW/286 hp (T4)
MD_P02_0783	Mercedes-Benz OM936 LA - 210 kW/286 hp (T4) with air compressor

E0473 0105A100B 1

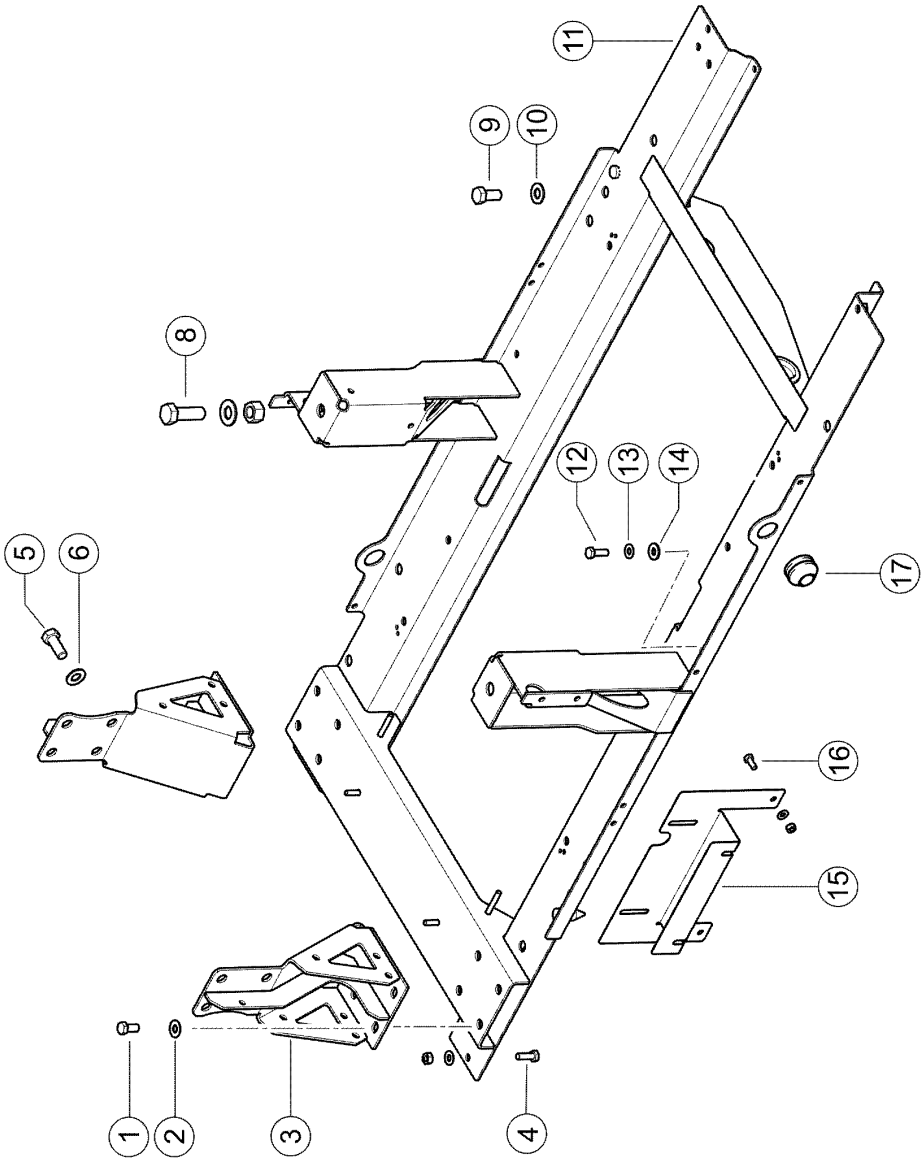

100 ENGINE SUSPENSION 1)

Pos.	Part No.	Description	Dimension	Quantity	Conditions
1	**00 0236 056 0**	HEXAGON HEAD BOLT	M12X25	8	
2	**00 0239 389 0**	CONTACT WASHER	A12	8	
3	**00 0781 253 1**	SUPPORT		2	
4	**00 0237 453 0**	HEXAGON HEAD BOLT	M10X30	1	
4	**00 0239 388 0**	CONTACT WASHER	A10-10,2X22,25X1,6	1	
4	**00 0236 171 0**	HEXAGONAL NUT	M10	1	
5	**00 0368 026 0**	HEX.HEAD BOLT	M16X40	8	
6	**00 0239 391 0**	CONTACT WASHER	A16	8	
8	**00 0237 591 0**	HEX.HEAD BOLT	M20X60	2	
8	**00 0212 191 0**	CONTACT WASHER	A20	2	
8	**00 0237 521 0**	HEX.NUT	M20	2	
9	**00 0236 230 0**	HEXAGON HEAD BOLT	M16X35	6	
10	**00 0239 391 0**	CONTACT WASHER	A16	6	
11	**00 0781 150 4**	ENGINE MOUNTING		1	
12	**00 0237 453 0**	HEXAGON HEAD BOLT	M10X30	2	
13	**00 0239 388 0**	CONTACT WASHER	A10-10,2X22,25X1,6	2	
14	**00 0234 326 0**	WASHER	11X26X3	2	
15	**00 0781 297 3**	SUPPORT	2X207X376,2	1	
16	**00 0236 200 0**	HEXAGON HEAD BOLT	M8X20	2	
16	**00 0239 387 0**	CONTACT WASHER	A8-8,2X18X1,4	2	
16	**00 0236 170 0**	HEXAGONAL NUT	M8	2	
17	**00 0734 779 0**	CABLE RING	C 20-35X50X2	1	

1) Equipment

MD_P02_0725	OM906LA ECE R120 205 kW@2200 rpm Tier 3 / Stage IIIA
MD_P02_0726	OM906LA DL compr. ECE R120 205 kW@2200 rpm Tier 3 / Stage IIIA

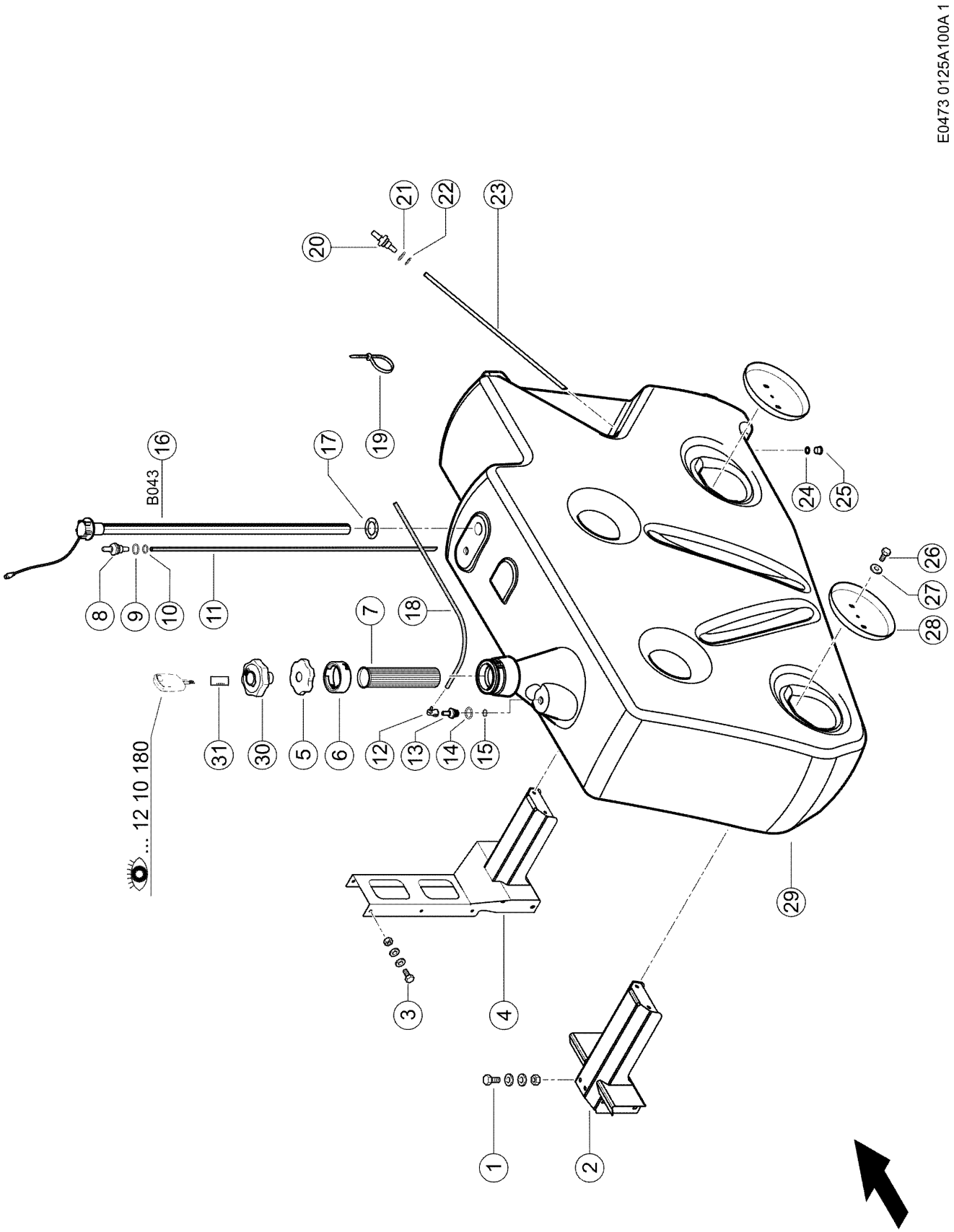
E0473 0125A100A 1
B043
... 12 10 180

100 FUEL TANK 1)

Pos.	Part No.	Description	Dimension	Quantity	Conditions
1	**00 0237 461 0**	HEXAGON HEAD BOLT	M12X30	12	
1	**00 0239 389 0**	CONTACT WASHER	A12	24	
1	**00 0236 172 0**	HEXAGONAL NUT	M12	12	
2	**00 0548 203 0**	MOUNT		1	
3	**00 0237 382 0**	HEXAGON HEAD BOLT	M10X20	6	
3	**00 0239 388 0**	CONTACT WASHER	A10-10,2X22,25X1,6	12	
3	**00 0236 171 0**	HEXAGONAL NUT	M10	6	
4	**00 2312 912 0**	MOUNT		1	
5	**00 0034 018 0**	CAP		1	
6	**00 0038 915 0**	SOCKET	SV 80 B/40	1	
7	**00 0736 238 0**	TANK FILTER		1	
8	**00 1828 333 0**	ADAPTER		1	2)
9	**00 1828 336 0**	O-RING	19X4-N	1	
10	**00 0218 694 0**	O-RING	18 X3 -N	1	
11	**00 0550 430 1**	RETURN PIPE		1	3)
12	**00 0217 501 0**	CONNECTOR	NQS 1/2" - 6 X 90 GRAD	1	
13	**00 0794 417 2**	VENTILATION		1	4)
14	**00 1828 336 0**	O-RING	19X4-N	1	
15	**00 0218 694 0**	O-RING	18 X3 -N	1	
16	**00 1811 920 0**	LEVEL INDICATOR	L=1020MM	1	5)
16	**00 0783 653 0**	PT SCREW	6ST 4X40	1	
17	**00 0794 993 0**	GASKET	VORRATSGEBER	1	
18	**00 0459 454 0**	PVC-HOSE	6 X 1,5	1	6)
19	**00 2151 573 0**	CABLE TIE	4,6 X 200 2TLG. KANTENBE	1	
20	**00 0783 649 2**	ADAPTER		1	7)
21	**00 0217 460 0**	O-RING	18,64X3,53 -N	1	
22	**00 0218 694 0**	O-RING	18 X3 -N	1	
23	**00 0550 428 1**	SUCTION PIPE		1	8)
24	**00 0218 694 0**	O-RING	18 X3 -N	1	
25	**00 0550 068 0**	SCREW PLUG		1	9)
26	**00 0237 382 0**	HEXAGON HEAD BOLT	M10X20	4	
27	**00 0239 394 1**	CONTACT WASHER	B10	4	
28	**00 0548 224 1**	WASHER		2	
29	**00 2312 750 0**	FUEL TANK		1	10)
30	**00 0536 232 0**	CAP	DV80A M. SCHLOSS	1	11)
31	**00 0536 215 0**	LOCKING CYLINDER	TANK,STANDARD SCHLIESSUN	1	12)
31	**00 0536 225 0**	LOCKING CYLINDER	TANK,INDIVIDUELLE SCHLIE	1	11)

1)	**Equipment**		
		MD_P14_0050	Fuel tank 500 litres
2)	**Remarks**		with Item 9
3)	**Remarks**		with Item 8 - 10
4)	**Remarks**		with Item 14, 15
5)	**CCN**		
		CCN-B043	fuel level sensor with Item 17
6)	**Remarks**		1900 mm long
7)	**Remarks**		with Item. 21, 22
8)	**Remarks**		with Item 20 - 22

100 FUEL TANK 1)

9)	**Remarks**		with Item 24
10)	**Remarks**		with Item 5-17,20-25
11)	**Equipment**	MD_Q18_0020	Locking system, individual
12)	**Equipment**	MD_Q18_0010	Locking system, standard

E0473 0125A100B 1

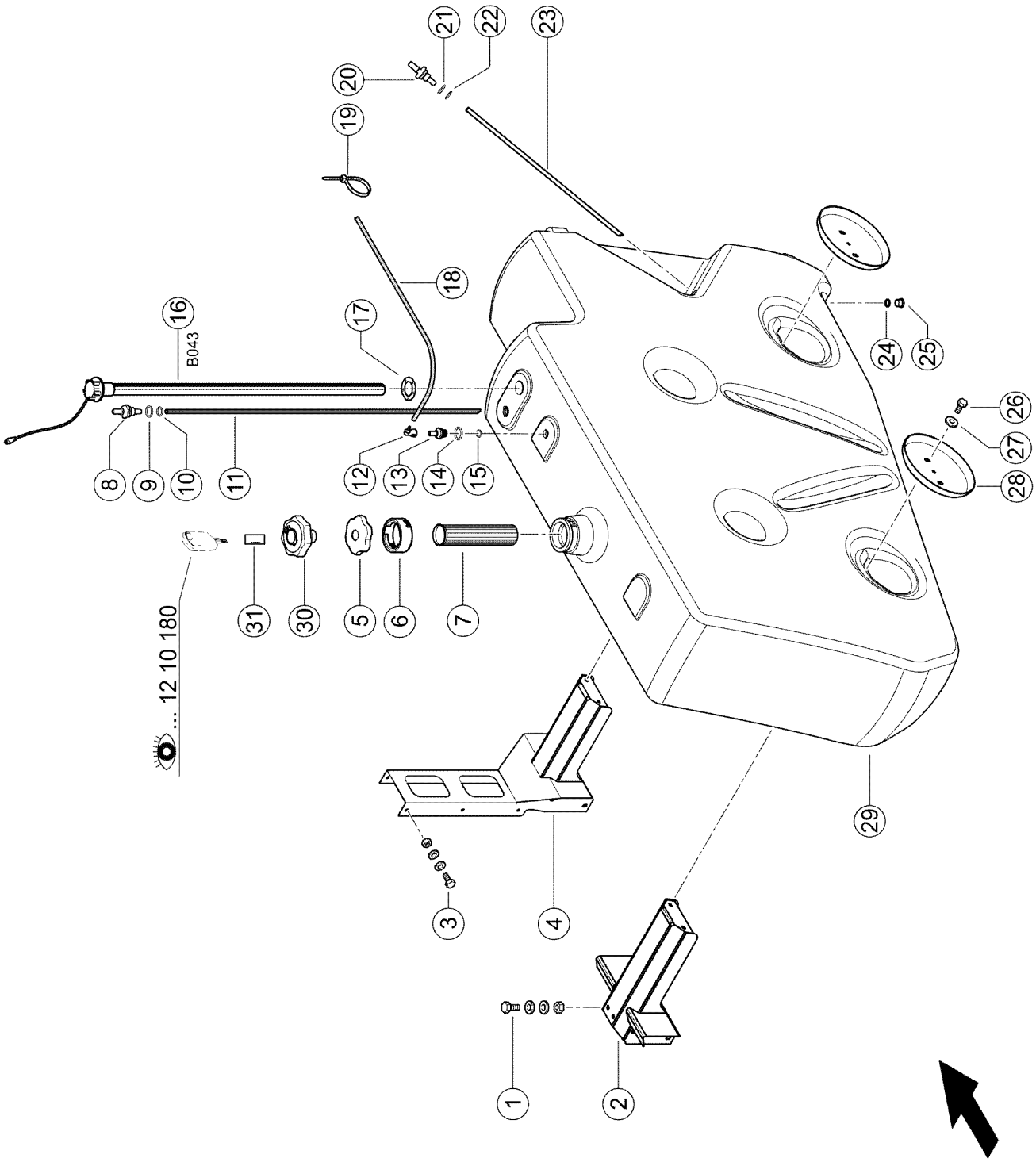

100 FUEL TANK 1)

Pos.	Part No.	Description	Dimension	Quantity	Conditions
1	**00 0237 461 0**	HEXAGON HEAD BOLT	M12X30	12	
1	**00 0239 389 0**	CONTACT WASHER	A12	24	
1	**00 0236 172 0**	HEXAGONAL NUT	M12	12	
2	**00 0548 203 0**	MOUNT		1	
3	**00 0237 382 0**	HEXAGON HEAD BOLT	M10X20	6	
3	**00 0239 388 0**	CONTACT WASHER	A10-10,2X22,25X1,6	12	
3	**00 0236 171 0**	HEXAGONAL NUT	M10	6	
4	**00 2312 912 0**	MOUNT		1	
5	**00 0034 018 0**	CAP		1	
6	**00 0038 915 0**	SOCKET	SV 80 B/40	1	
7	**00 0736 238 0**	TANK FILTER		1	
8	**00 1828 333 0**	ADAPTER		1	2)
9	**00 1828 336 0**	O-RING	19X4-N	1	
10	**00 0218 694 0**	O-RING	18 X3 -N	1	
11	**00 0550 429 1**	RETURN PIPE		1	3)
12	**00 0217 501 0**	CONNECTOR	NQS 1/2" - 6 X 90 GRAD	1	
13	**00 0794 417 2**	VENTILATION		1	4)
14	**00 1828 336 0**	O-RING	19X4-N	1	
15	**00 0218 694 0**	O-RING	18 X3 -N	1	
16	**00 0016 595 0**	LEVEL INDICATOR	D66X1210	1	5)
16	**00 0783 653 0**	PT SCREW	6ST 4X40	1	
17	**00 0794 993 0**	GASKET	VORRATSGEBER	1	
18	**00 0459 454 0**	PVC-HOSE	6 X 1,5	1	6)
19	**00 2151 573 0**	CABLE TIE	4,6 X 200 2TLG. KANTENBE	1	
20	**00 0783 649 2**	ADAPTER		1	7)
21	**00 0217 460 0**	O-RING	18,64X3,53 -N	1	
22	**00 0218 694 0**	O-RING	18 X3 -N	1	
23	**00 0550 428 1**	SUCTION PIPE		1	8)
24	**00 0218 694 0**	O-RING	18 X3 -N	1	
25	**00 0550 068 0**	SCREW PLUG		1	9)
26	**00 0237 382 0**	HEXAGON HEAD BOLT	M10X20	4	
27	**00 0239 394 1**	CONTACT WASHER	B10	4	
28	**00 0548 224 1**	WASHER		2	
29	**00 2312 748 0**	FUEL TANK		1	10)
30	**00 0536 232 0**	CAP	DV80A M. SCHLOSS	1	11)
31	**00 0536 215 0**	LOCKING CYLINDER	TANK,STANDARD SCHLIESSUN	1	12)
31	**00 0536 225 0**	LOCKING CYLINDER	TANK,INDIVIDUELLE SCHLIE	1	11)

1)	**Equipment**		
		MD_P14_0065	Fuel tank 650 litres
2)	**Remarks**		with Item 9
3)	**Remarks**		with Item 8 - 10
4)	**Remarks**		with Item 14, 15
5)	**CCN**		
		CCN-B043	fuel level sensor with Item 17
6)	**Remarks**		1900 mm long
7)	**Remarks**		with Item. 21, 22
8)	**Remarks**		with Item 20 - 22

100 FUEL TANK 1)

9)	**Remarks**		with Item 24
10)	**Remarks**		with Item 5-17,20-25
11)	**Equipment**	MD_Q18_0020	Locking system, individual
12)	**Equipment**	MD_Q18_0010	Locking system, standard

E0473 0125A120A 1

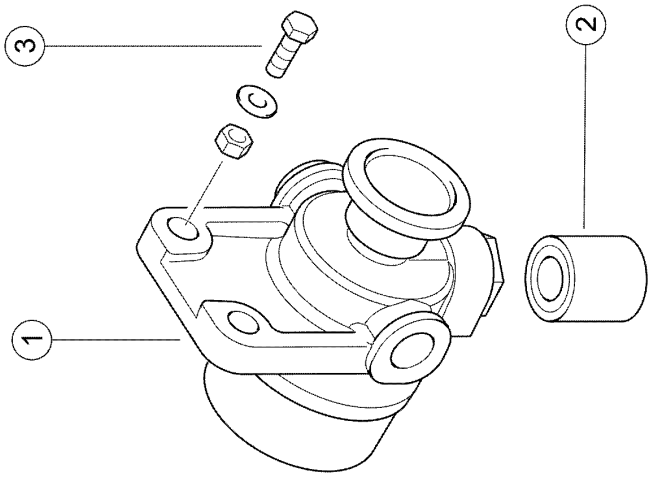

120 FUEL DELIVERY PUMP

Pos.	Part No.	Description	Dimension	Quantity	Conditions
1	**00 0068 665 0**	HAND PUMP	H11K06 M16X1,5	1	1)
1	**00 0077 447 0**	INSPECTION GLASS		1	
1	**00 0077 446 0**	SEALING RING	F. H11 K02	1	
2	**00 0077 445 0**	FILTER ELEMENT		1	
3	**00 0237 442 0**	HEXAGON HEAD BOLT	M8X25	2	
3	**00 0239 387 0**	CONTACT WASHER	A8-8,2X18X1,4	2	
3	**00 0236 170 0**	HEXAGONAL NUT	M8	2	

1)	**Remarks**	with Item 2

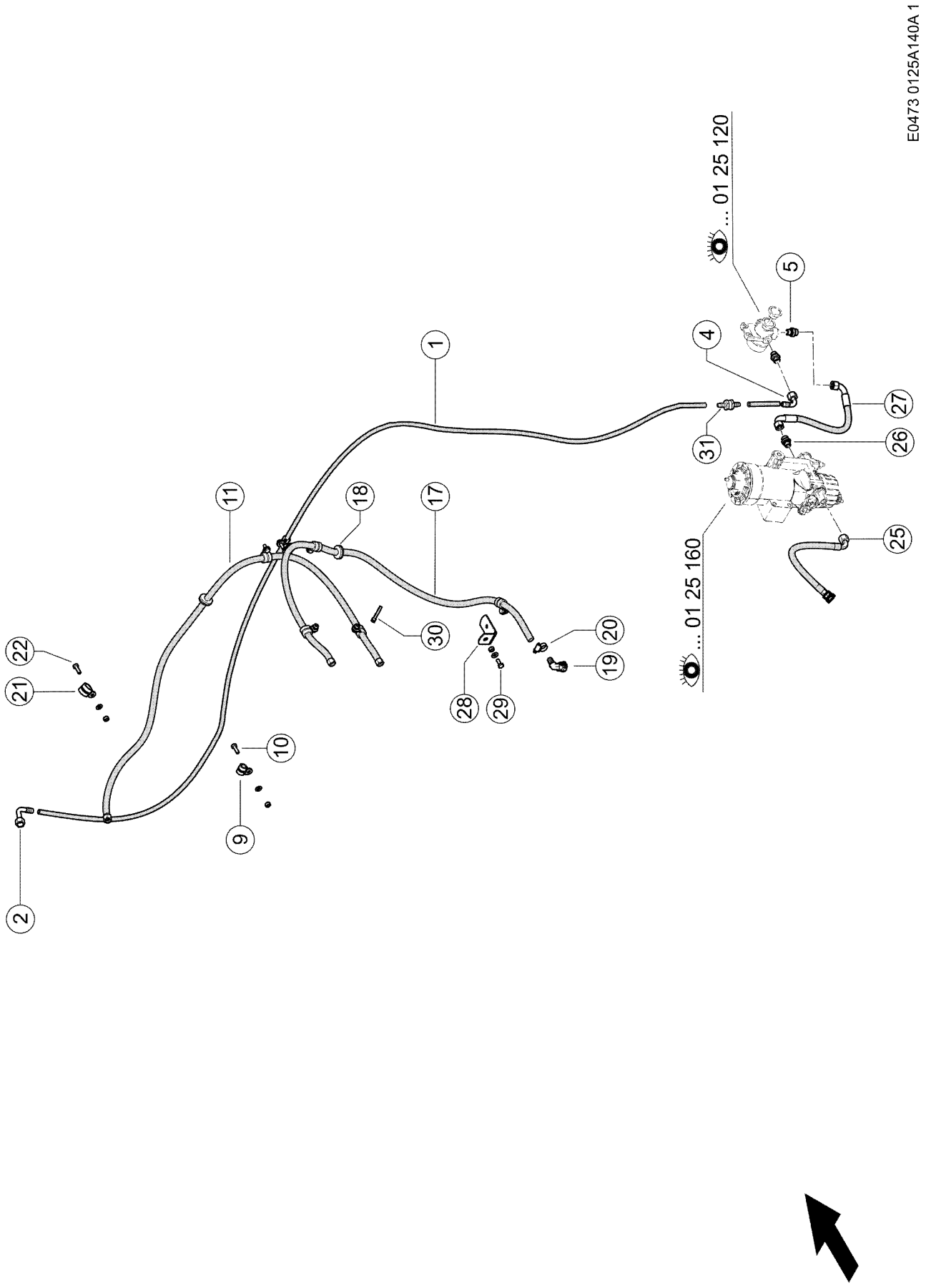
E0473 0125A140A 1
... 01 25 120
... 01 25 160
1
2
4
5
9
10
11
17
18
19
20
21
22
25
26
27
28
29
30
31

140 FUEL PIPES 1)

Pos.	Part No.	Description	Dimension	Quantity	Conditions
1	**00 2598 000 1**	FUEL PIPE	VORFILTER-MOTOR	1	2)
2	**00 0068 687 1**	CONNECTION	M18X1,5-10/100GRAD KRAFT	1	
4	**00 0142 279 0**	TUBE NIPPLE	DN10 - N90 L12 (M18X1,5)	1	
5	**00 0216 097 0**	STRAIGHT MALE CONNECTOR	SDS-L12XM16X1, 5-TYPE E	2	
9	**00 0216 341 0**	HOLDER CLAMP	D1-12X20	5	
10	**00 0236 200 0**	HEXAGON HEAD BOLT	M8X20	5	
10	**00 0239 387 0**	CONTACT WASHER	A8-8,2X18X1,4	5	
10	**00 0236 170 0**	HEXAGONAL NUT	M8	5	
11	**00 0773 889 3**	FUEL PIPE	MOTOR - KUEHLER	1	
17	**00 0773 257 3**	FUEL PIPE	KUEHLER-TANK	1	3)
18	**00 0215 409 0**	GROMMET	C 10-18X30X1,5	1	
19	**00 0530 176 0**	CONNECTION	NQ-S-NW 1/2-08-90GRAD	1	
20	**00 0408 552 2**	HOSE CLAMP	A-12-22X9	1	
21	**00 0216 156 0**	PIPE CLAMP	D1-19X20	6	
22	**00 0236 200 0**	HEXAGON HEAD BOLT	M8X20	6	
22	**00 0239 387 0**	CONTACT WASHER	A8-8,2X18X1,4	6	
22	**00 0236 170 0**	HEXAGONAL NUT	M8	6	
25	**00 0773 601 2**	FUEL PIPE	TANK-FILTER	1	
26	**00 0215 799 0**	SCREW-IN FITTING	SDS-L12XG3/8A-TYPE E	1	
27	**00 0773 602 1**	FUEL PIPE	FILTER-HANDPUMPE	1	
28	**00 0077 377 0**	SUPPORT	3X30X98	1	
29	**00 0236 200 0**	HEXAGON HEAD BOLT	M8X20	1	
29	**00 0239 387 0**	CONTACT WASHER	A8-8,2X18X1,4	1	
29	**00 0236 170 0**	HEXAGONAL NUT	M8	1	
30	**00 0237 871 0**	CABLE TIE	4,8X188X1,3	2	
31	**00 0773 855 0**	NON-RETURN VALVE	NW 10	1	

1)	**Equipment**		
		MD_P02_0782	Mercedes Benz OM936 LA - 210 kW/286 hp (T4)
		MD_P02_0783	Mercedes-Benz OM936 LA - 210 kW/286 hp (T4) with air compressor
2)	**Remarks**		with Item 2, 4, 31
3)	**Remarks**		with Item 18 - 20

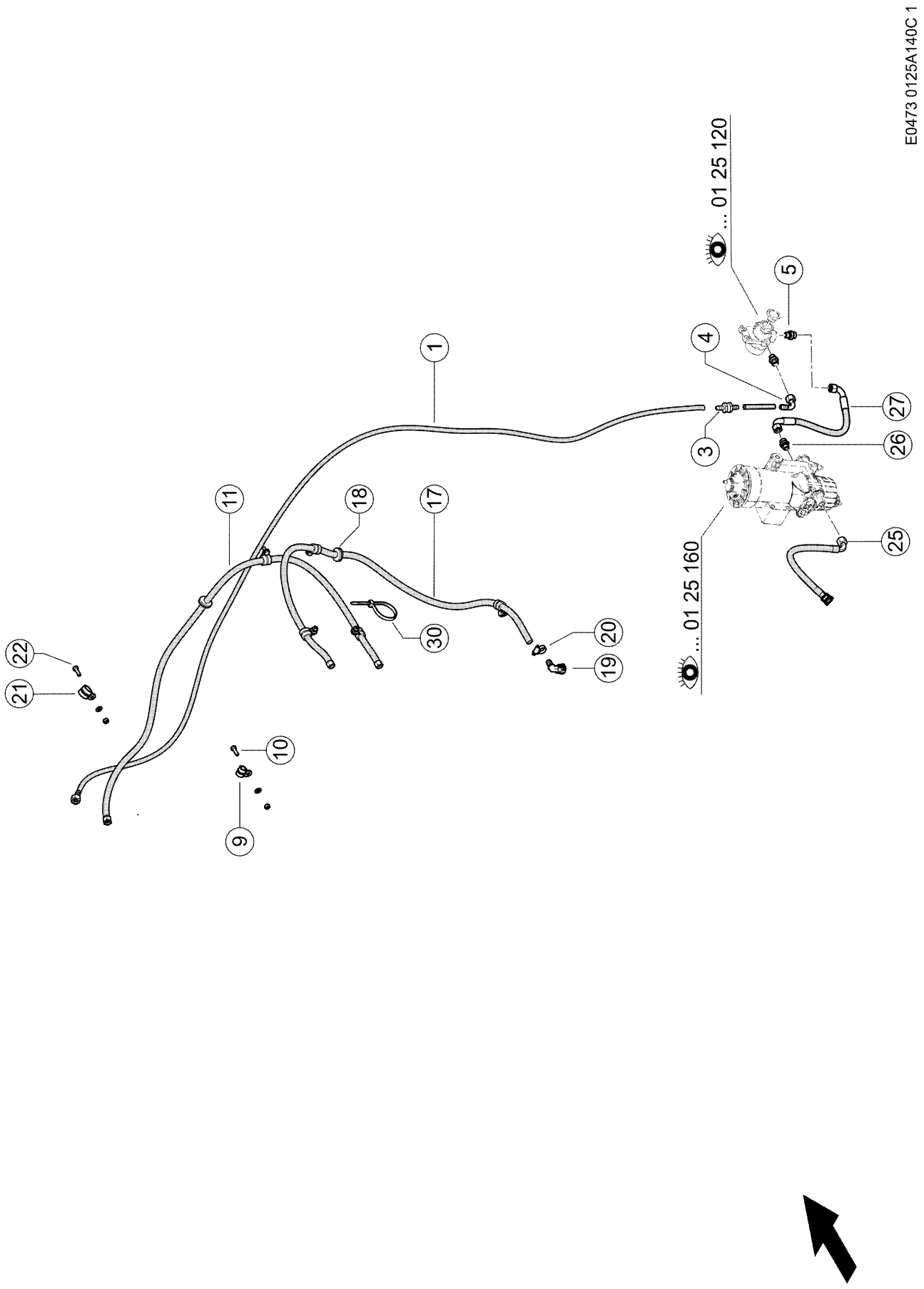
E0473 0125A140C 1
... 01 25 120
... 01 25 160
1
3
4
5
9
10
11
17
18
19
20
21
22
25
26
27
30

140 FUEL PIPES 1)

Pos.	Part No.	Description	Dimension	Quantity	Conditions
1	**00 2644 990 0**	FUEL PIPE	VORFILTER-MOTOR	1	2)
3	**00 0773 855 0**	NON-RETURN VALVE	NW 10	1	
4	**00 0142 279 0**	TUBE NIPPLE	DN10 - N90 L12 (M18X1,5)	1	
5	**00 0216 097 0**	STRAIGHT MALE CONNECTOR	SDS-L12XM16X1, 5-TYPE E	2	
9	**00 0216 341 0**	HOLDER CLAMP	D1-12X20	4	
10	**00 0236 200 0**	HEXAGON HEAD BOLT	M8X20	4	
10	**00 0239 387 0**	CONTACT WASHER	A8-8,2X18X1,4	4	
10	**00 0236 170 0**	HEXAGONAL NUT	M8	4	
11	**00 0773 889 3**	FUEL PIPE	MOTOR - KUEHLER	1	
17	**00 0773 257 3**	FUEL PIPE	KUEHLER-TANK	1	3)
18	**00 0215 409 0**	GROMMET	C 10-18X30X1,5	1	
19	**00 0530 176 0**	CONNECTION	NQ-S-NW 1/2-08-90GRAD	1	
20	**00 0408 552 2**	HOSE CLAMP	A-12-22X9	1	
21	**00 0215 612 0**	PIPE CLAMP	D1-17X20	5	
22	**00 0236 200 0**	HEXAGON HEAD BOLT	M8X20	5	
22	**00 0239 387 0**	CONTACT WASHER	A8-8,2X18X1,4	5	
22	**00 0236 170 0**	HEXAGONAL NUT	M8	5	
25	**00 0773 601 2**	FUEL PIPE	TANK-FILTER	1	
26	**00 0215 799 0**	SCREW-IN FITTING	SDS-L12XG3/8A-TYPE E	1	
27	**00 0773 602 1**	FUEL PIPE	FILTER-HANDPUMPE	1	
30	**00 0237 871 0**	CABLE TIE	4,8X188X1,3	1	

1)	**Equipment**		
	MD_P02_0725	OM906LA ECE R120 205 kW@2200 rpm Tier 3 / Stage IIIA	
	MD_P02_0726	OM906LA DL compr. ECE R120 205 kW@2200 rpm Tier 3 / Stage IIIA	
2)	**Remarks**	with Item 3, 4	
3)	**Remarks**	with Item 18 - 20	

E0473 0125A160A 1

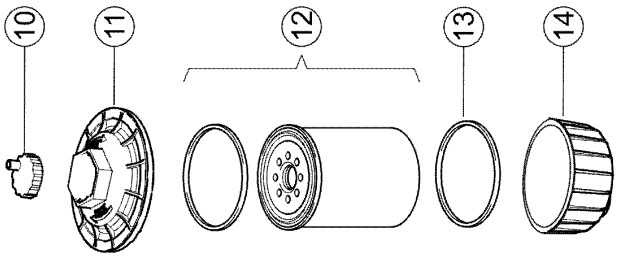

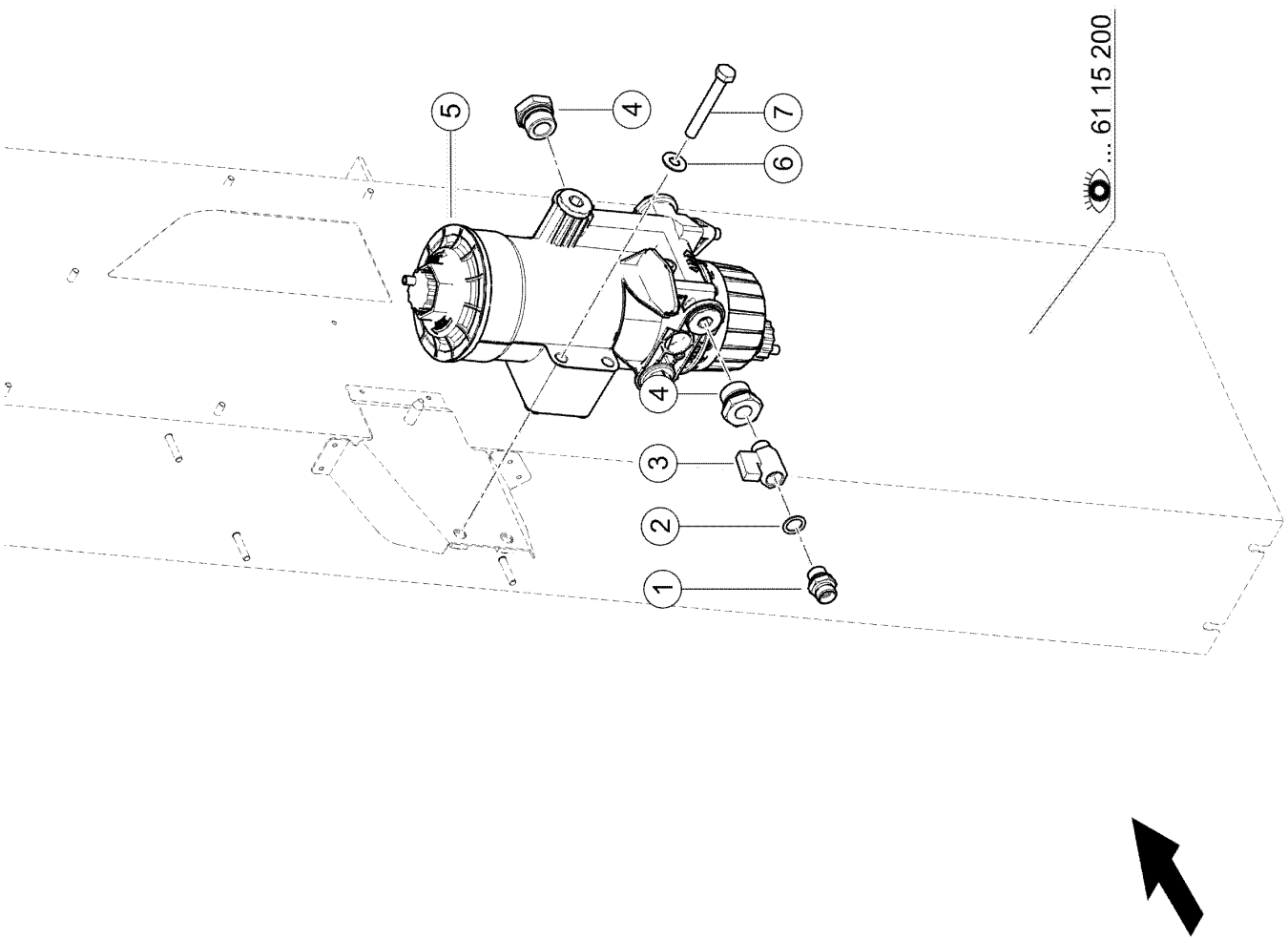

Thank you so much for reading.

Please click the “Buy Now!” button below to download the complete manual.

After you pay.

You can download the most perfect and complete manual in the world immediately.

Our support email:

ebooklibonline@outlook.com