9802/5490 M1-3-1 BLOCK ASSEMBLY

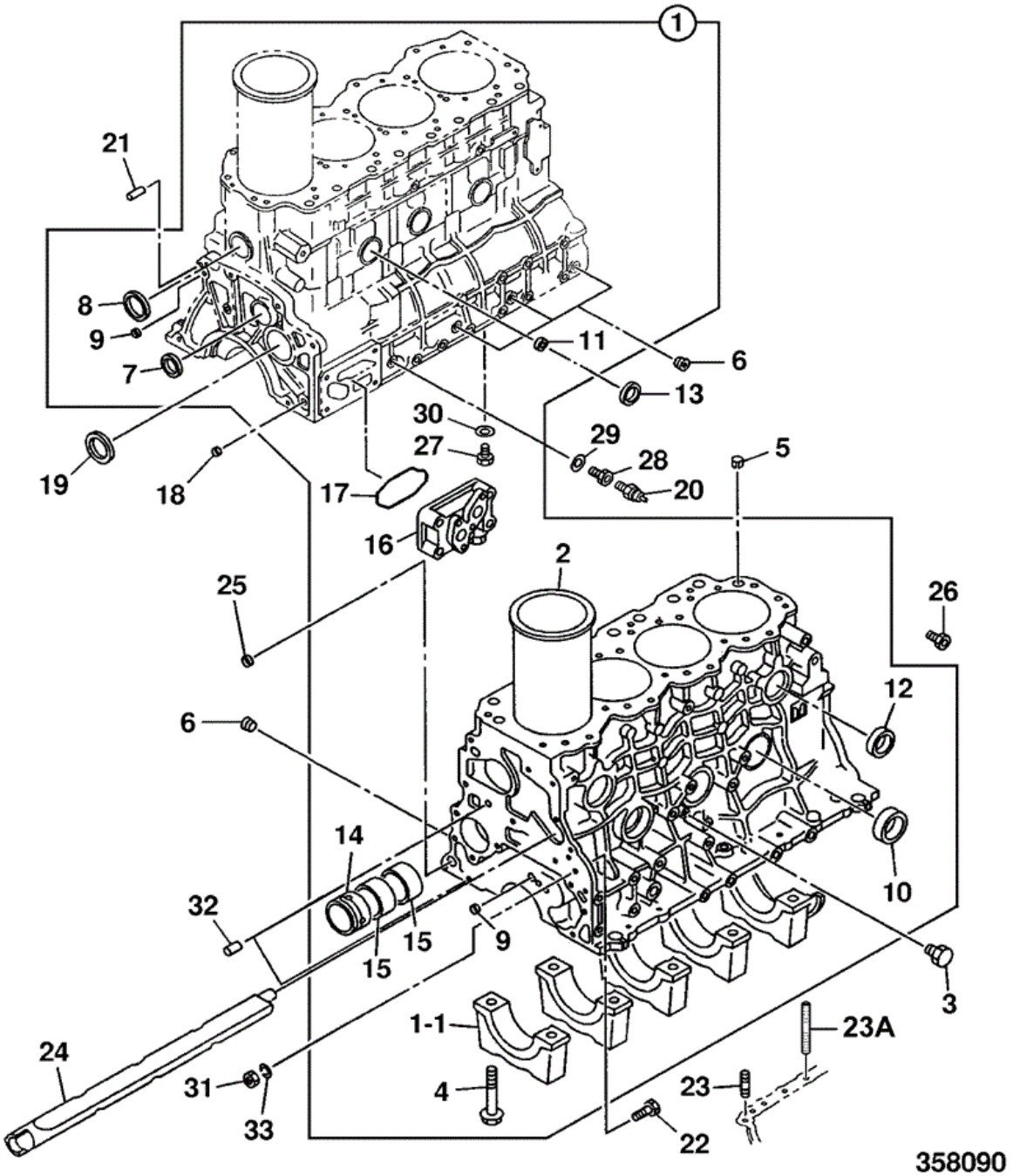

Item	Part #	Change No	Description	Usage Code	QTY
1	02/801710		Block cylinder assembly		1
1-1	****		None serviced part		5
2	02/800861		Liner cylinder		4

3	02/800019		Plug water drain, PT 1/4		2
4	8944326420		Bolt		10
5	8944533440		Dowel		2
6	1096050500		Plug		3
7	5112190170		Cup sealing, D=38		1
8	5112190180		Cup sealing, D=36		1
9	5096000130		Plug D=12		1
10	02/801711		Plug D=45		3
11	5112190080		Cup sealing, D=18		3
12	5112190150		Plug D=32		2
13	5112190180		Cup sealing, D=36		3
14	02/800856		Bush camshaft front		1
15	02/800857		Bush camshaft centre/rear		1
16	02/800858		Cover oil port		1
17	02/800859		Gasket oil port cover		1
18	5111290060		Plug sealing, D=16		2
19	8942505140		Cup sealing, D=56		1
20	701/60040		Switch oil pressure		1
21	9081610320		Pin		1
22	9096065350		Bolt		1
23	02/800862		Stud		8
23A	02/800983		Stud		4
24	02/800863		Duct water		1
25	5111290030		Cup sealing, D=15.6		1
26	****		'See Remark' *No longer required*		1
27	9992023160		Plug drain		1
28	02/800864		Connector oil pressure		1
29	9095714140		Washer seal		1
30	9095714160		Washer seal		1
31	9091115100		Nut		1
32	9081510200		Pin		2
33	9091505100		Washer spring		1

9802/5490 M1-4-1 CRANKSHAFT, BEARINGS PISTONS & CON-RODS

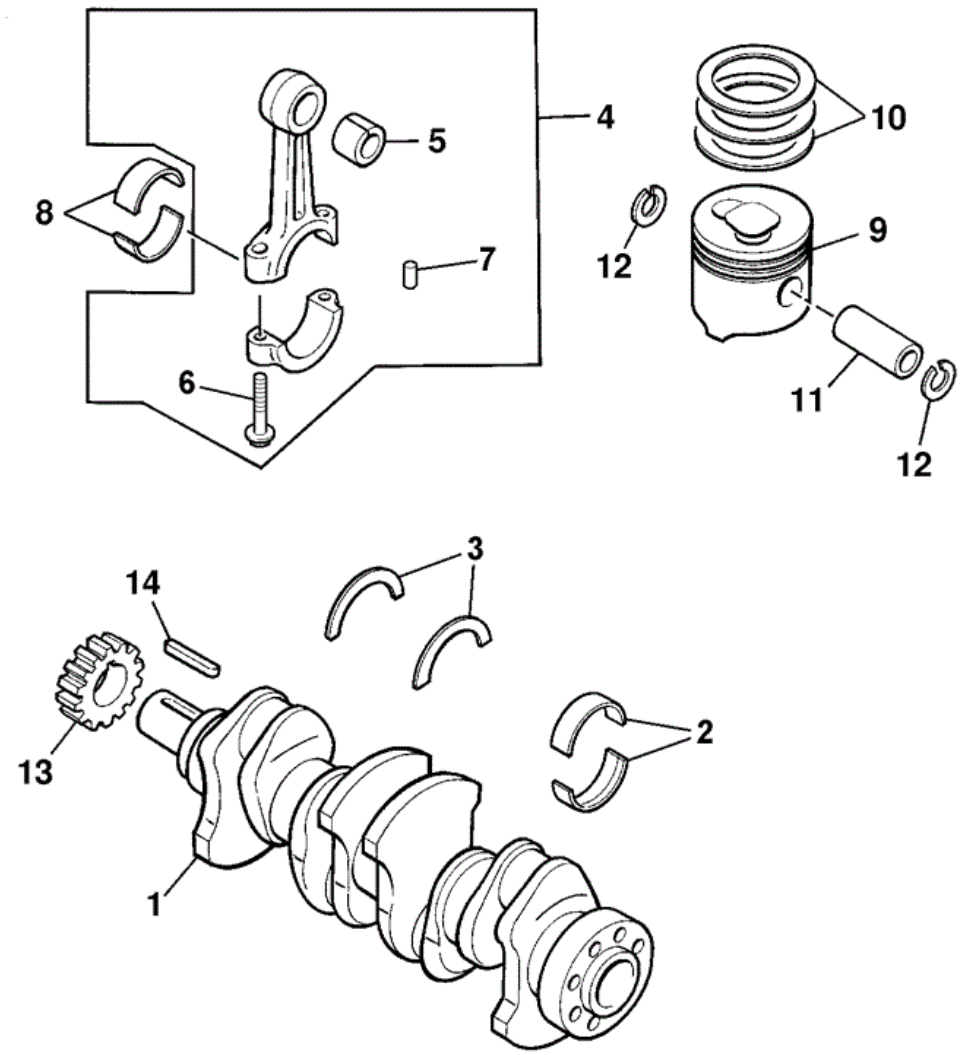

931450

Item	Part #	Change No	Description	Usage Code	QTY
1	02/800890		Crankshaft		1

2	02/801712		Kit-bearing kit-bearing main blu		5
2	02/801713		Kit-main bearing grade 3		5
2	02/801714		Kit-bearing kit-bearing main gre		5
3	02/800886		Kit-thrust washer		2
4	02/801715		Rod connecting		4
5	:02/801716		Bush bush small end		1
6	:02/800893		Bolt conrod		2
7	:02/800894		Pin dowel *CON-ROD BIG END*		2
8	8943241590		Kit-bearing big end		1
9	02/800895		Piston grade=AX		0
10	02/800897		Kit-piston ring		4
11	02/800898		Pin gudgeon		4
12	02/800899		Ring snap		8
13	02/800238		Gear crankshaft		1
14	02/800901		Key woodruff		1

9802/5490 M1-5-1 FANS, PULLEYS & FAN BELT

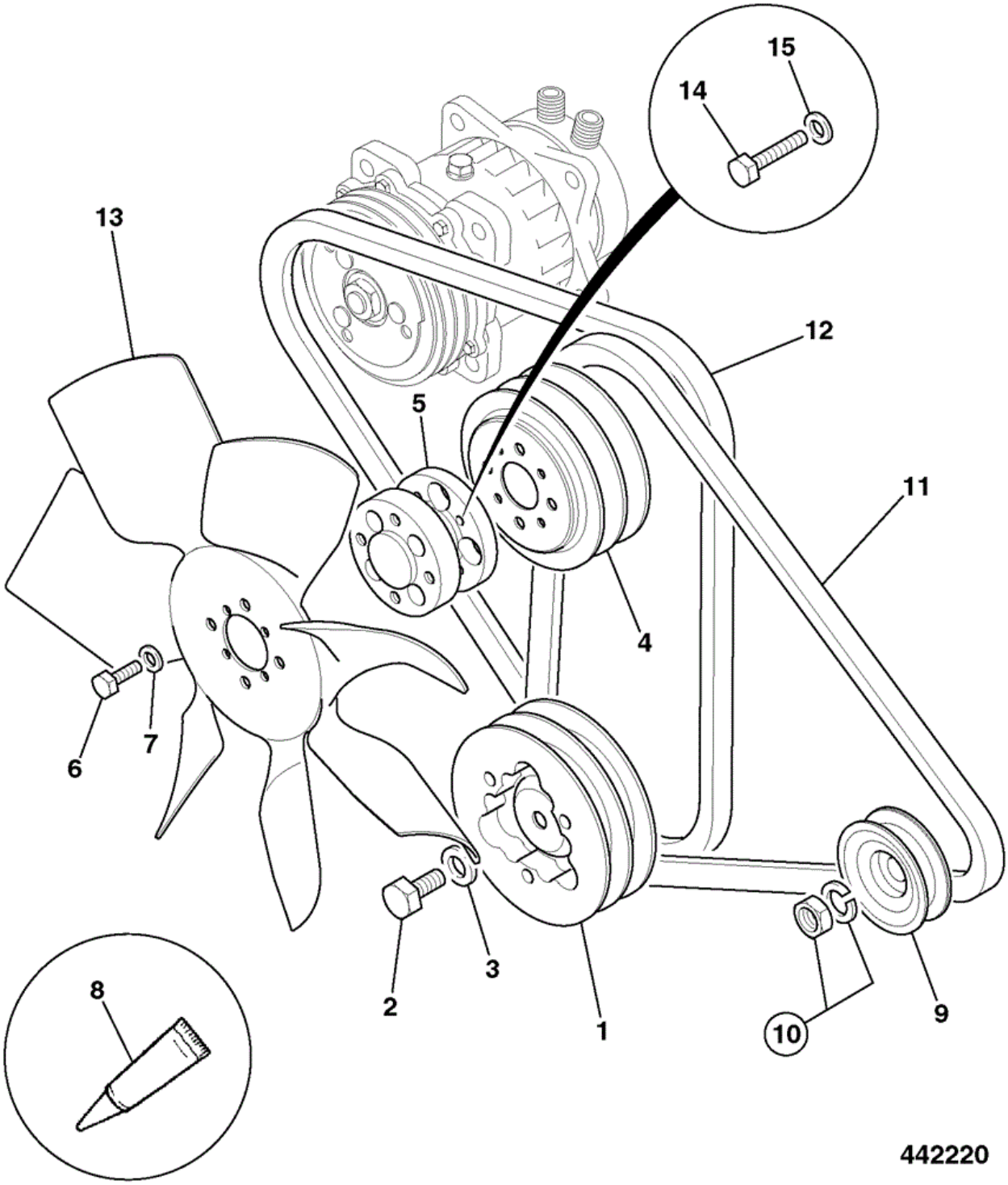

Item	Part #	Change No	Description	Usage Code	QTY
1	02/801590		Pulley crankshaft		1
2	02/800244		Bolt		1
3	02/800908		Washer crankshaft		1

4	02/801591		Pulley water pump		1
5	829/30869		Spacer fan		1
6	1315/0307D		Setscrew M8 x 25 mm		4
7	1420/0007D		Washer (M8)		4
8	4101/0200		Fluid Locking		0
9	714/36750		Kit-pulley alternator		1
10	714/36751		Kit-nut & washer		1
11	02/800222		Belt fan, single L=1211mm *Alternator drive*		1
12	331/29466		Belt drive 1168La *Compressor drive*		1
13	30/925547		Fan 18" Puller 7 blade cooling		1
14	1315/0208D		Setscrew (M6 X 30)		4
15	1420/0006D		Washer (M6)		4

9802/5490 M1-5-2 FANS, PULLEYS & FAN BELT

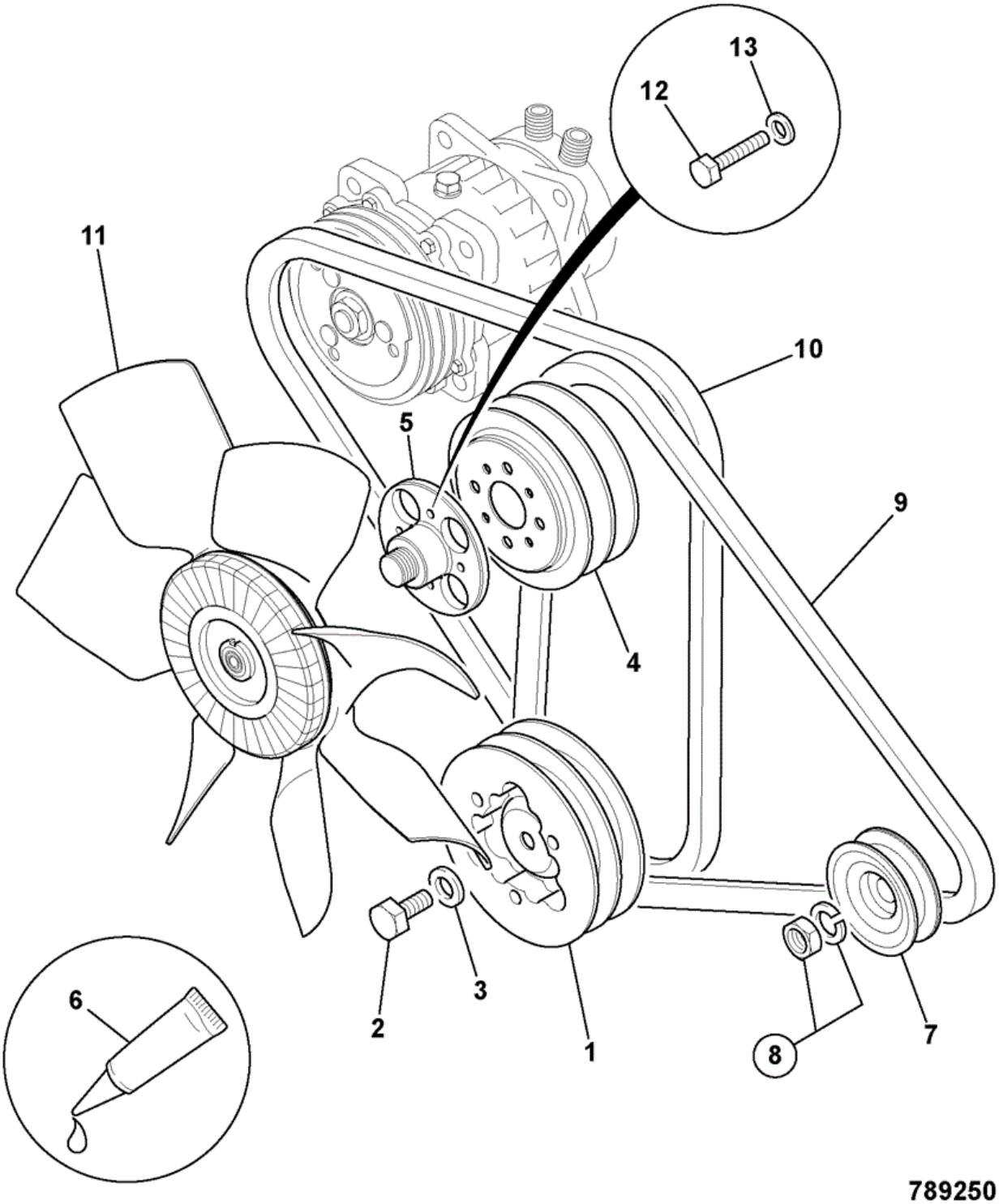

Item	Part #	Change No	Description	Usage Code	QTY
1	02/801590		Pulley crankshaft		1
2	02/800244		Bolt		1
3	02/800908		Washer crankshaft		1

4	02/801591		Pulley water pump		1
5	30/926524		Adapter fan mounting		1
6	4101/0200		Fluid Locking		0
7	714/36750		Kit-pulley alternator		1
8	714/36751		Kit-nut & washer		1
9	02/800222		Belt fan, single L=1211mm *Alternator drive*		1
10	331/29466		Belt drive 1168La *Compressor drive*		1
11	30/926523		Fan Viscous Drive		1
12	1315/0208D		Setscrew (M6 X 30)		4
13	1420/0006D		Washer (M6)		4

9802/5490 M1-6-1 TIMING CASE

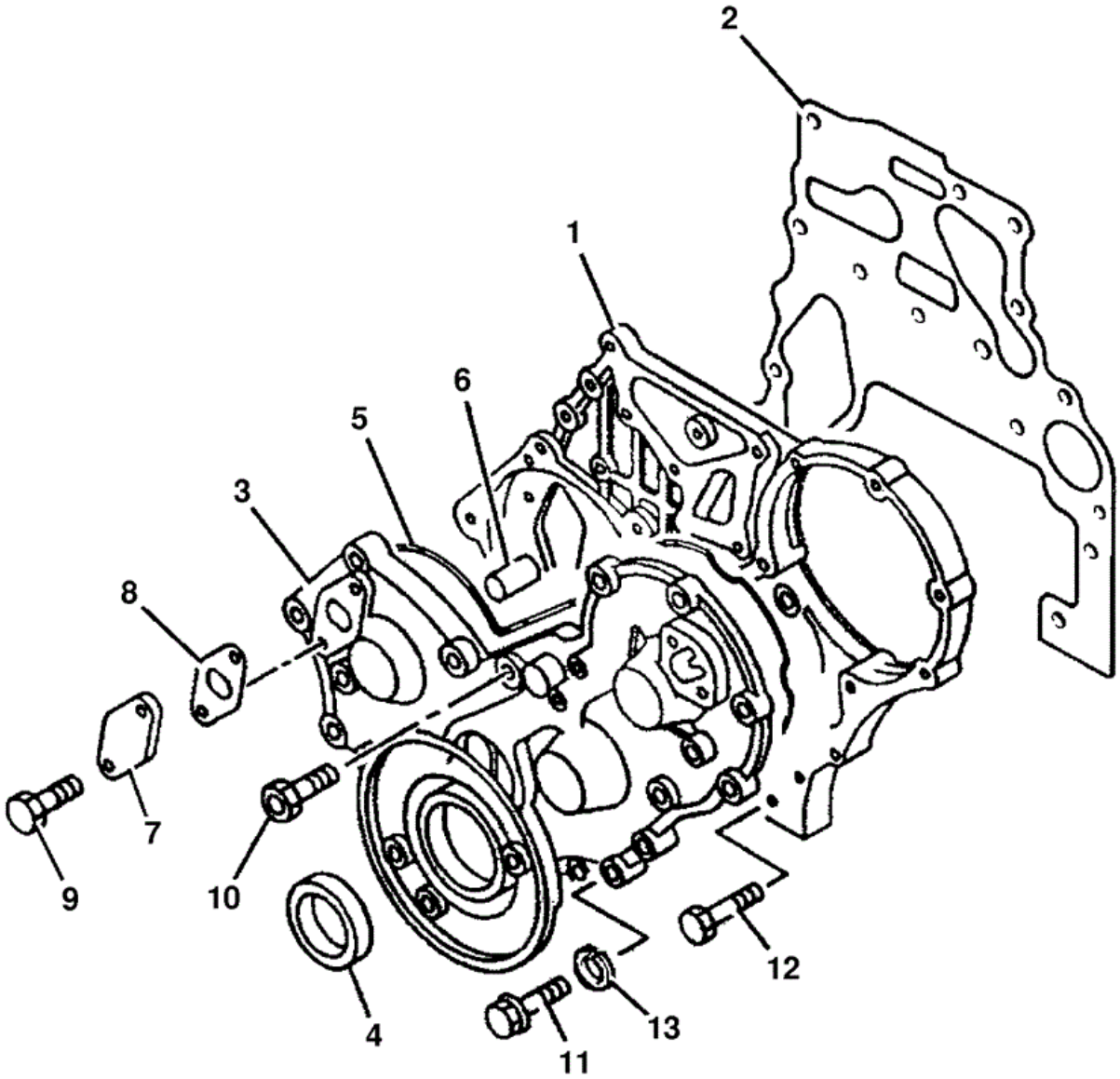

358190

Item	Part #	Change No	Description	Usage Code	QTY
1	02/800903		Casing timing		1
2	02/800250		Gasket t/case to block		1
3	02/800906		Cover timing		1

4	02/800251		Seal front oil		1
5	02/800249		O Ring t/cover to t/case		1
6	9081510200		Pin		2
7	02/800254		Cover inspection		1
8	02/800430		Gasket inspection cover		1
9	0280806120		Bolt flange head M6 x 12		2
10	02/801718		Bolt socket M12x55		1
11	02/800907		Bolt flange head M8 X 30		8
11-1	0280808600		Bolt flange head M8 x 60mm		7
12	0500408450		Bolt		2
12-1	0500408180		Bolt		3
12-2	0500408200		Bolt		3
13	9091607080		Washer spring		1

9802/5490 M1-6-2 CAMSHAFT & GEARS

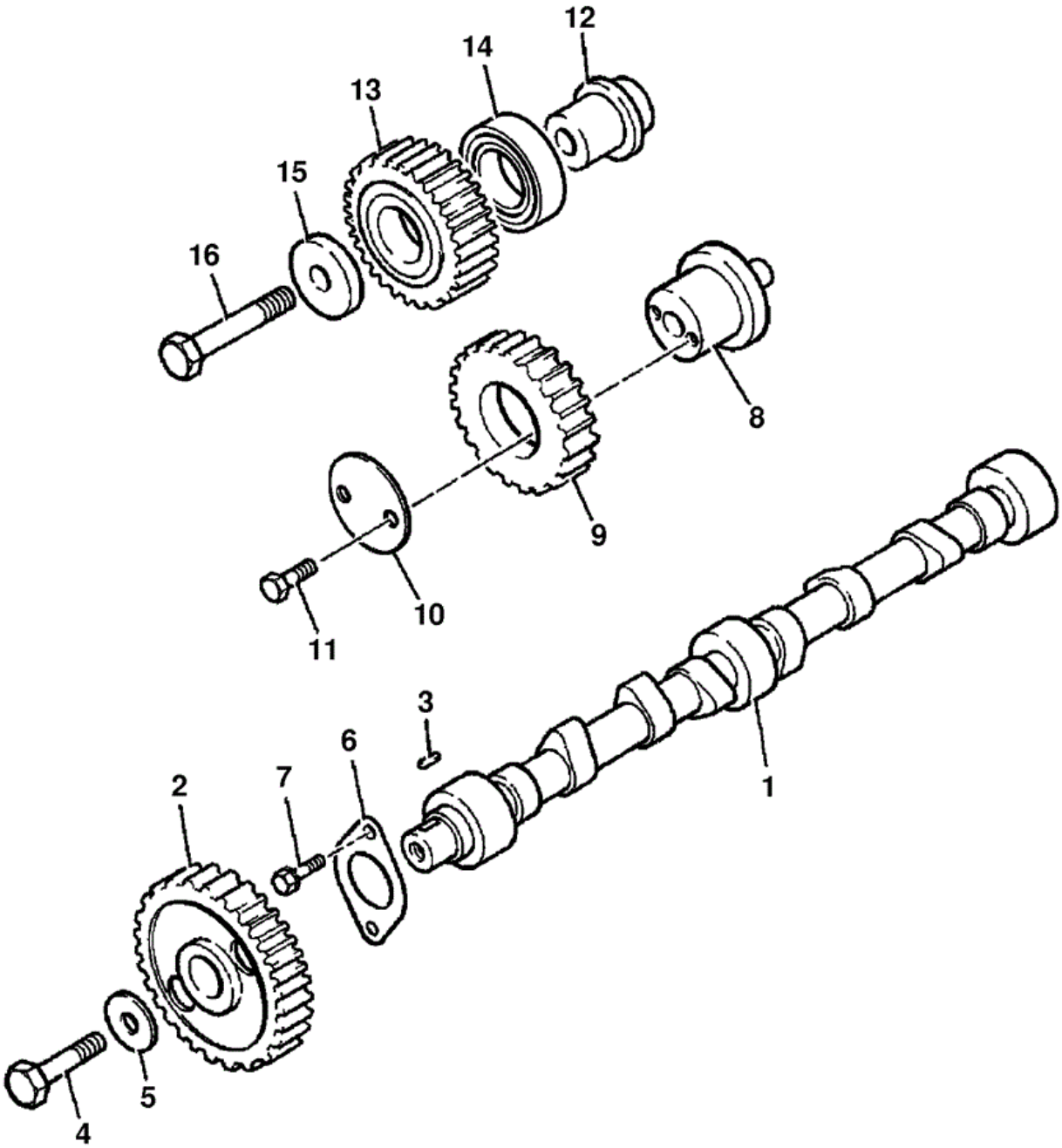

Item	Part #	Change No	Description	Usage Code	QTY
1	02/801719		Camshaft		1
2	02/800255		Gear camshaft		1
3	9080007180		Key		1

4	5090000690		Bolt B=21 L=47		1
5	5125190021		Washer T=8		1
6	02/800261		Plate thrust		1
7	0500408160		Bolt		2
8	02/801720		Shaft idler gear		1
9	02/800256		Gear idler 'A'		1
10	02/800262		Collar thrust		1
11	5090000841		Bolt L=55		2
12	02/800259		Shaft idler gear		1
13	02/800258		Gear idler 'B'		1
14	:02/800260		Bearing idler		1
15	5125190021		Washer T=8		1
16	8941097061		Bolt shaft, L=67		1

9802/5490 M1-7-1 FLYWHEEL & HOUSING

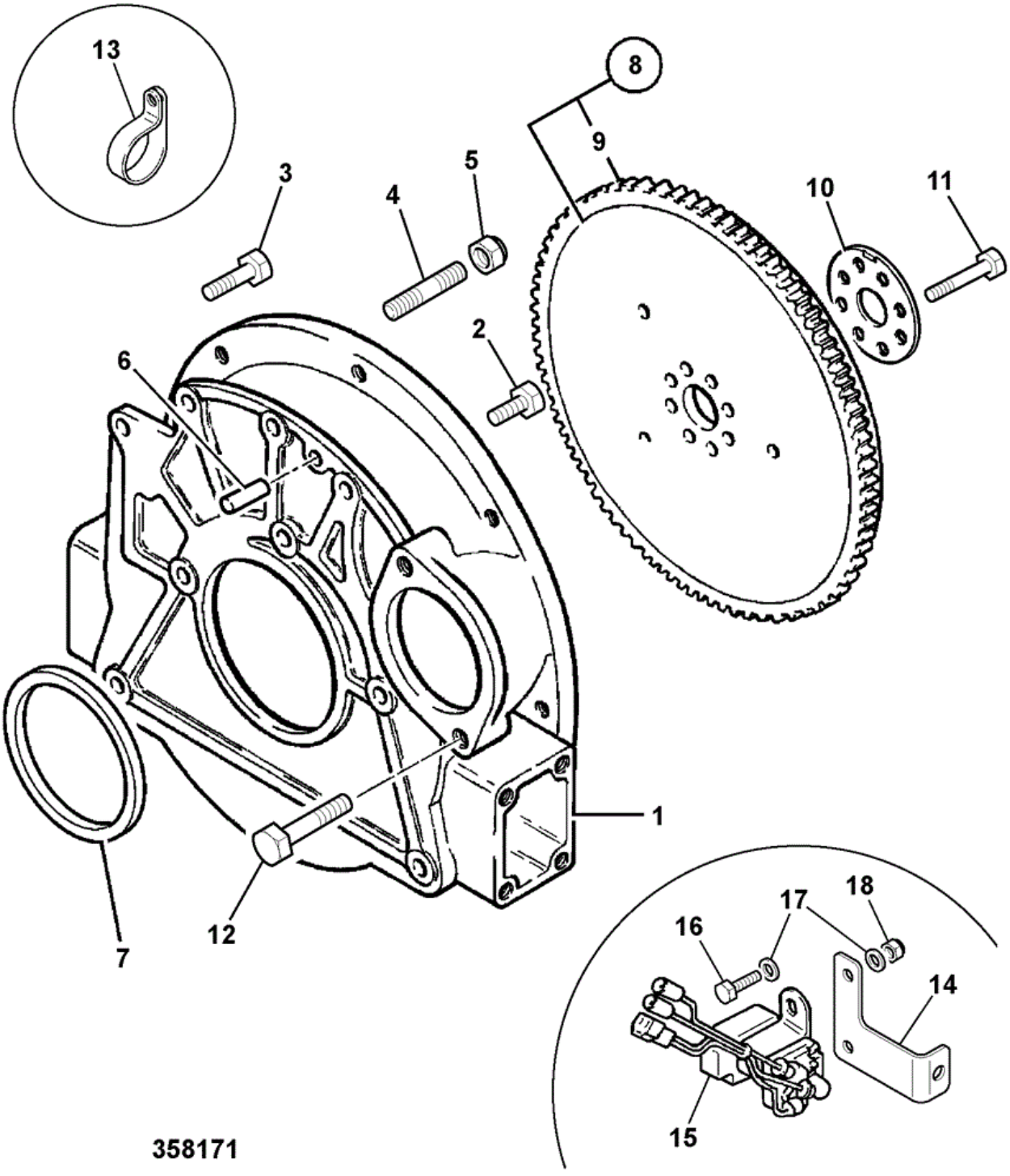

Item	Part #	Change No	Description	Usage Code	QTY
1	02/800263		Housing flywheel		1
2	5090002270		Bolt M12 X 25mm		3
3	02/800873		Bolt flange head M10 X 30mm		1

4	02/800267		Stud		2
5	02/800902		Nut		2
6	9081610320		Pin		1
7	02/800905		Seal rear oil		1
8	02/800840		Flywheel assembly		1
9	02/800265		Gear flywheel ring		1
10	02/800268		Plate locking		1
11	02/800266		Bolt		8
12	02/800904		Bolt flange head M12 X 35mm		2
14	331/19874		Bracket mounting starter relay		1
15	716/30118		Relay starter safety		1
16	1315/0103Z		Screw		2
17	1420/0005Z		Washer (M5)		4
18	1370/0003Z		Lock Nut M5		2

9802/5490 M1-8-1 ENGINE MOUNTINGS

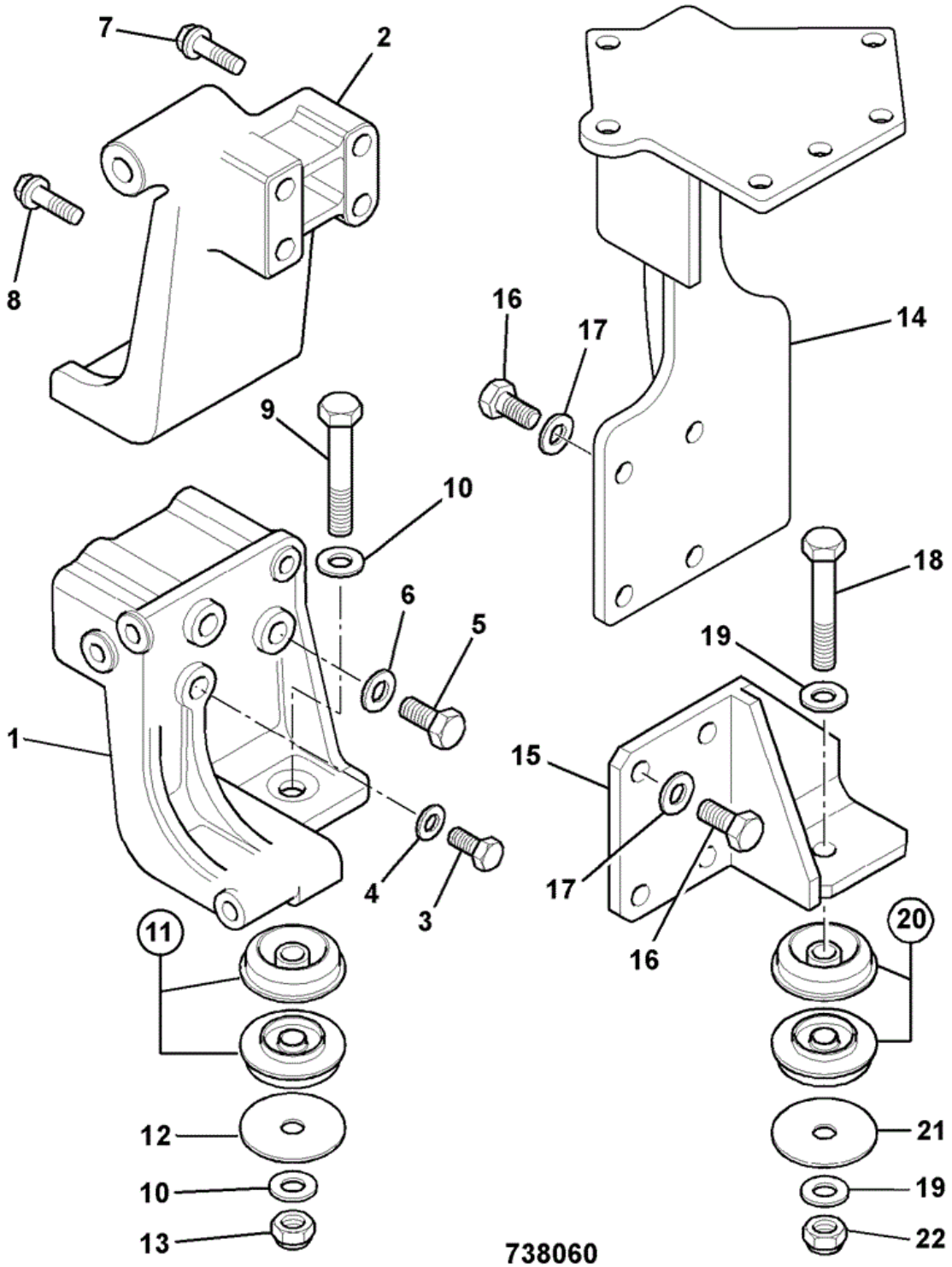

Item	Part #	Change No	Description	Usage Code	QTY
1	02/800923		Bracket engine mounting left hand,REAR		1
2	02/801592		Bracket engine mounting right hand,REAR		1
3	02/800363	<28/04/04	Bolt M10 x 70		3

Thank you so much for reading.

Please click the “Buy Now!” button below to download the complete manual.

Buy Now

After you pay.

You can download the most perfect and complete manual in the world immediately.

Our support email:

ebooklibonline@outlook.com