9802/7600 L1-8-1 ENGINE, SHORT LD BUILD

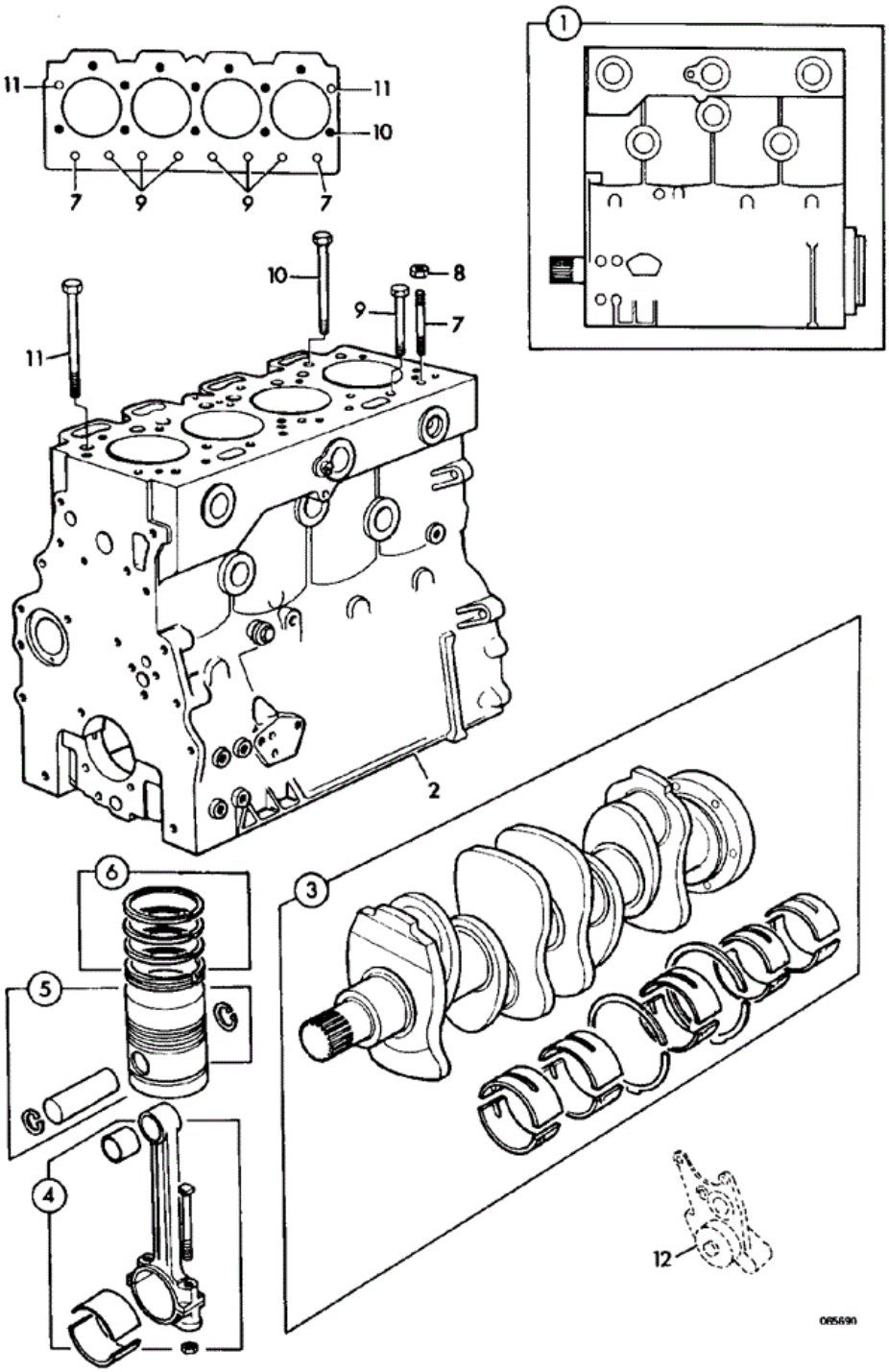

Item	Part #	Change No	Description	Usage Code	QTY
1	02/101325		Engine Short imperial		1
2	****		'See Remark' *See frame L1-1-1 Block Assembly*		1

3	****		'See Remark' *See frame L1-2-1 Crankshaft Assembly*		1
4	****		'See Remark' *See frame L1-2-1 Con-Rod Assembly*		4
5	****		'See Remark' *See frame L1-2-1 Piston Assembly*		4
6	****		'See Remark' *See frame L1-2-1 Piston Ring Kit*		4
7	****		'See Remark' *See frame L1-1-1 Bolt,Cylinder Head*		8
8	****		'See Remark' *See frame L1-1-1 Bolt,Cylinder Head*		12
9	****		'See Remark' *See frame L1-1-1 Bolt,Cylinder Head*		2
10	****		'See Remark' *See frame L5-1-1 Oil Pump* *See Note 1*		1

Note 1: Not included in item 1

9802/7600 L2-1-1 CYLINDER HEAD LD BUILD

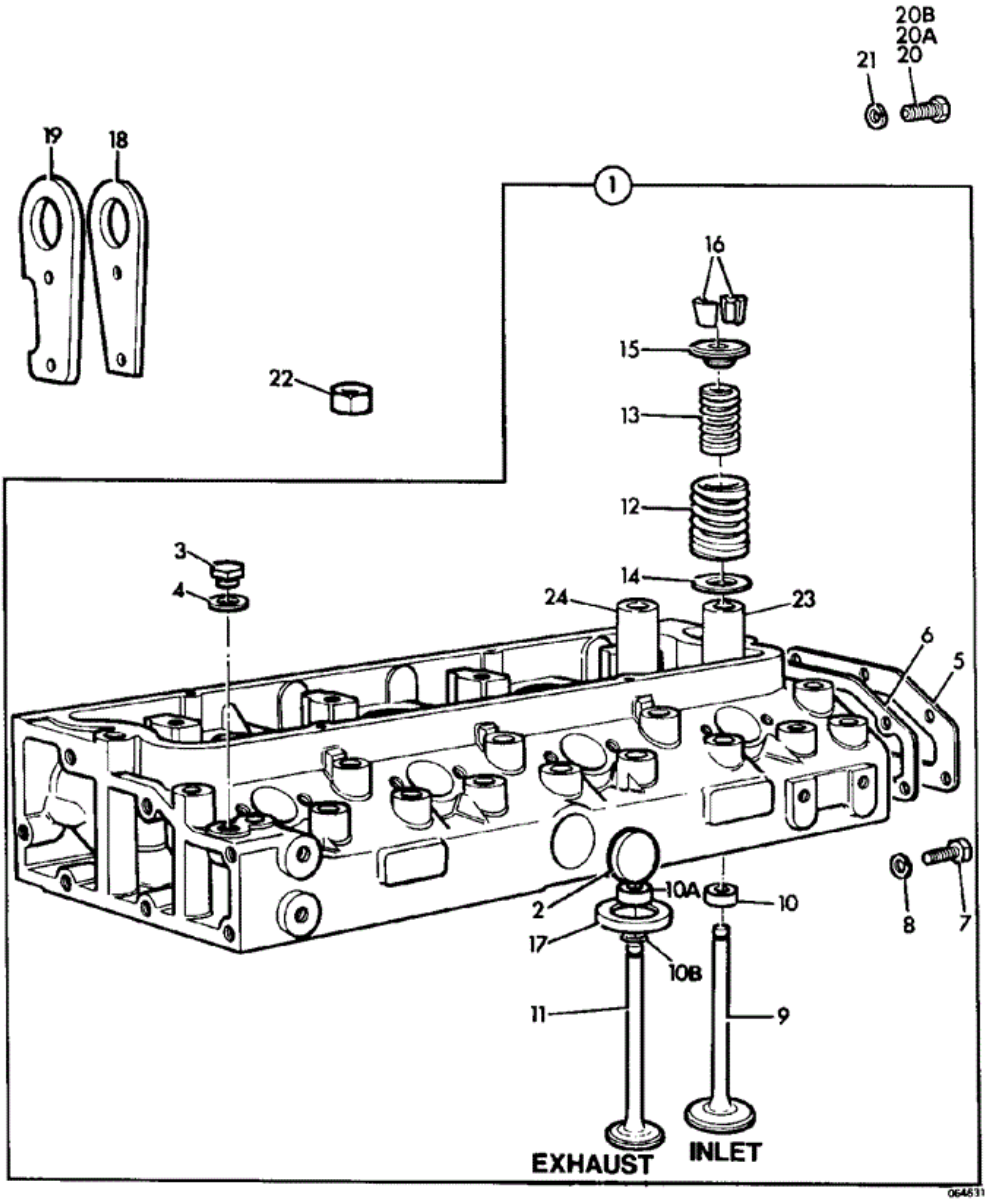

Item	Part #	Change No	Description	Usage Code	QTY
1	02/101584	Superseded	Head assembly, cylinder		1
1	02/101748	Superseded	Head assembly, cylinder		1
1	02/102084		Head cylinder assembly		1

2	:02/100105		Plug core D=32mm		1
3	:02/100148		Plug		1
4	:823/00361		Washer		1
5	:02/100149	Superseded	Cover End *6 Holes 5/16"Dia.*		1
5	:02/101750	<EU040235M	Cover		1
5	:02/101784		Cover *4 Holes 5/16" 2 Holes 5/8"Dia.*		1
6	:02/100150	<EU040235M	Gasket *6 Holes 5/16"Dia.*		1
6	:02/101785		Gasket *4 Holes 5/16" 2 Holes 3/8"Dia.*		1
7	:1305/0104Z		Setscrew (5/16" UNF x 3/4") *5/16"Dia.*		4
7	:1305/0104Z	<EU040235M	Setscrew (5/16" UNF x 3/4") *5/16"Dia.*		2
7	:1305/0204Z		Bolt 3/8" *3/8"Dia.*		1
8	:823/00268		Washer spring *5/16"*		4
8	:823/00268	<EU040235M	Washer spring *5/16"*		2
8	:823/00269		Washer spring *3/8"*		1
9	:02/100022		Valve Inlet Standard		4
9	02/100085	<EU040235M	Valve Inlet Oversize - .003inch *Used only when items 23 & 24 are not fitted*		0
9	02/100086	<EU040235M	Valve Inlet Oversize - .015inch *Used only when items 23 & 24 are not fitted*		0
9	02/100087	<EU040235M	Valve Inlet Oversize - .030inch *Used only when items 23 & 24 are not fitted*		0
10	:02/100668		Seal valve		4
10A	:02/100668		Seal valve		4
10B	:02/100026		O Ring		4
11	:02/100023		Valve Exhaust Standard		4
11	02/100088	<EU040235M	Valve Exhaust Oversize - .003inch *Used only when items 23 & 24 are not fitted*		0
11	02/100089	<EU040235M	Valve Exhaust Oversize - .015inch *Used only when items 23 & 24 are not fitted*		0
11	02/100090	<EU040235M	Valve Exhaust Oversize - .030inch *Used only when items 23 & 24 are not fitted*		0
12	:02/100019		Spring valve outer		8
13	:02/100018		Spring valve, inner		8
14	:02/100020	<EU040235M	Seat spring		8
14	:02/100638		Seat spring		8
15	:02/100021		Holder Collet		8
16	:02/100024		Collet		8
17	02/100621		Insert valve seat exhaust		0
18	02/100157		Plate lifting *Rear*		1
19	02/100157		Plate lifting *Front*		1
20	1305/0205Z		Bolt *Rear plate bottom*		1
20A	1305/0206Z		Setscrew (3/8" UNF x1") *Rear plate top*		1
			Bolt		

20B	1305/0210Z		*Front plate*		2
21	823/00269		Washer spring		4
23	:02/101788	>EU040236M	Guide Inlet valve *See Note 1*		4
24	:02/101789	>EU040236M	Guide exhaust valve *See Note 1*		4

Note 1: Used only with Cylinder heads machined to accomodate valve guides.

9802/7600 L2-2-1 ROCKER COVER LD BUILD

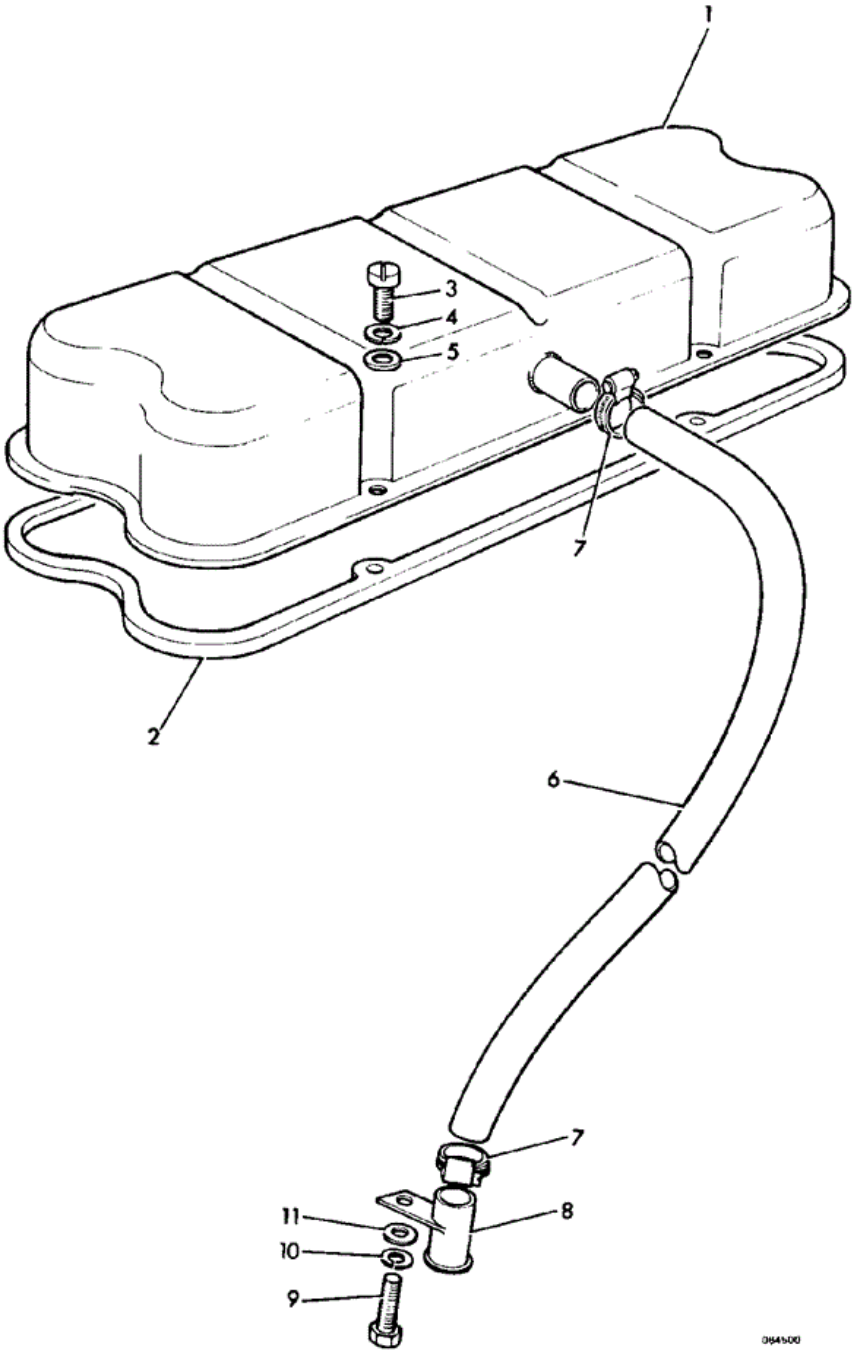

Item	Part #	Change No	Description	Usage Code	QTY
1	02/100035		Cover rocker		1
2	02/101749		Gasket rocker cover		1
3	1305/0003Z		Screw 1/4 UNF x .625		4

4	823/00267		Washer		4
5	1411/0001Z		Washer (1/4" Medium)		4
6	647/02400		Tube		1
7	2201/0004		Clip Jubilee		2
8	02/100180		Pipe		1
9	826/00761		Bolt		1
10	823/00268		Washer spring		1
11	1410/0002Z		Washer (5/16" Small)		1

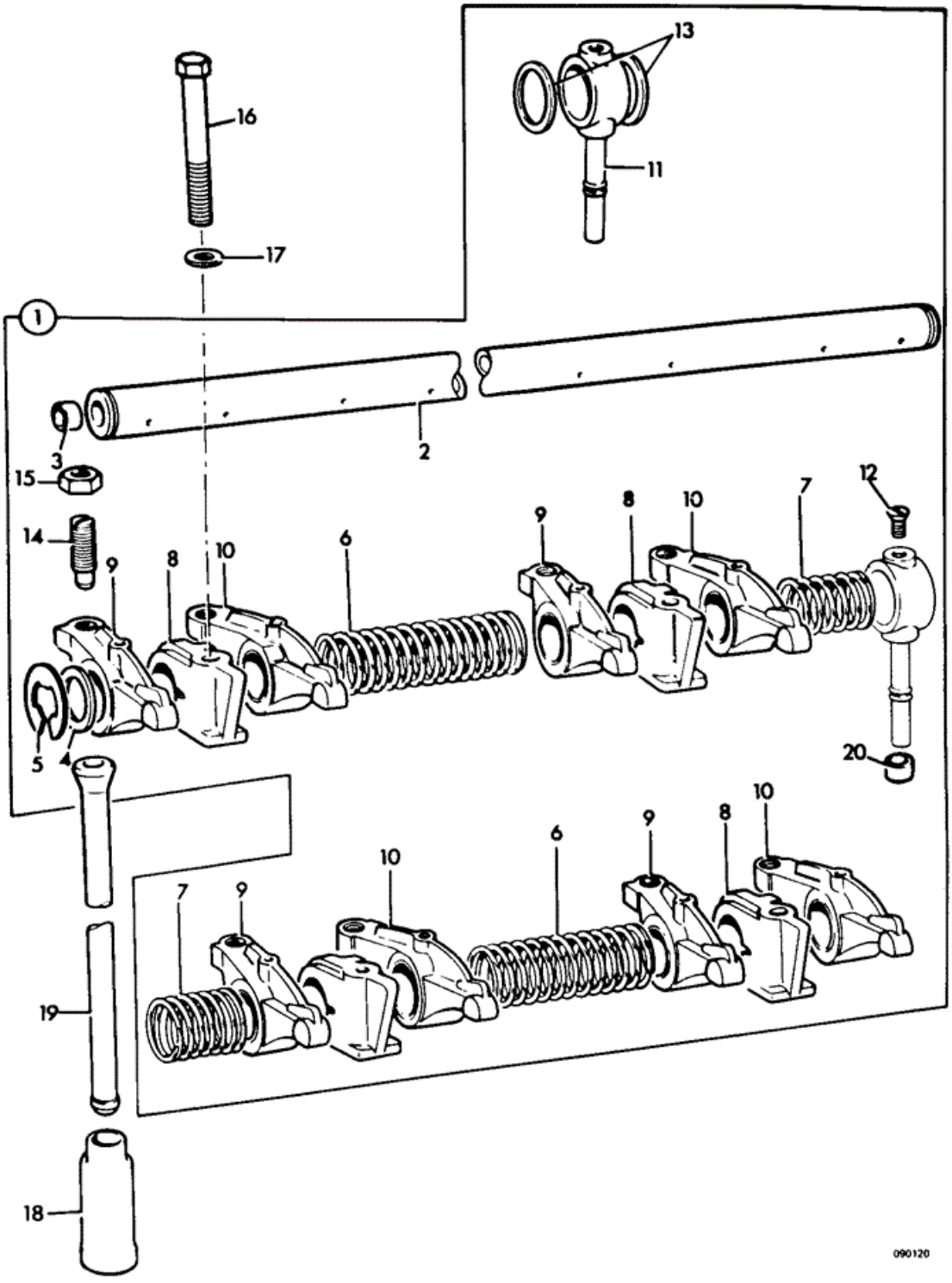

Item	Part #	Change No	Description	Usage Code	QTY
1	02/100155		Shaft rocker assembly		1
2	:02/100027	Superseded	Shaft rocker		1
2	:02/101889		Washer		1
3	::02/100152		Plug core D=11mm		2
4	:02/100332		Washer		2

5	:02/100287		Circlip		2
6	:02/100028		Spring long		2
7	:02/100029		Spring short		2
8	:02/100153		Bracket		4
9	:02/100031		Lever rocker, right hand		4
10	:02/100030		Lever rocker, left hand		4
11	:02/100154	Superseded	Pipe Rocker feed		1
11	:02/101713		Pipe rocker feed		1
12	:826/00124		Screw *Used only with bridge piece 02/100154*		1
12	:02/101714		Screw *Used only with bridge piece 02/101713*		1
13	:02/101804		Shim		2
14	:02/100032		Screw		8
15	:02/101203		Nut lock		8
16	1305/3314		Bolt		4
17	1410/0004		Washer		4
18	02/100044		Tappet		8
19	02/100043		Rod push		8
20	02/100321		Olive		1

9802/7600 L3-1-1 MANIFOLD, INDUCTION LD BUILD

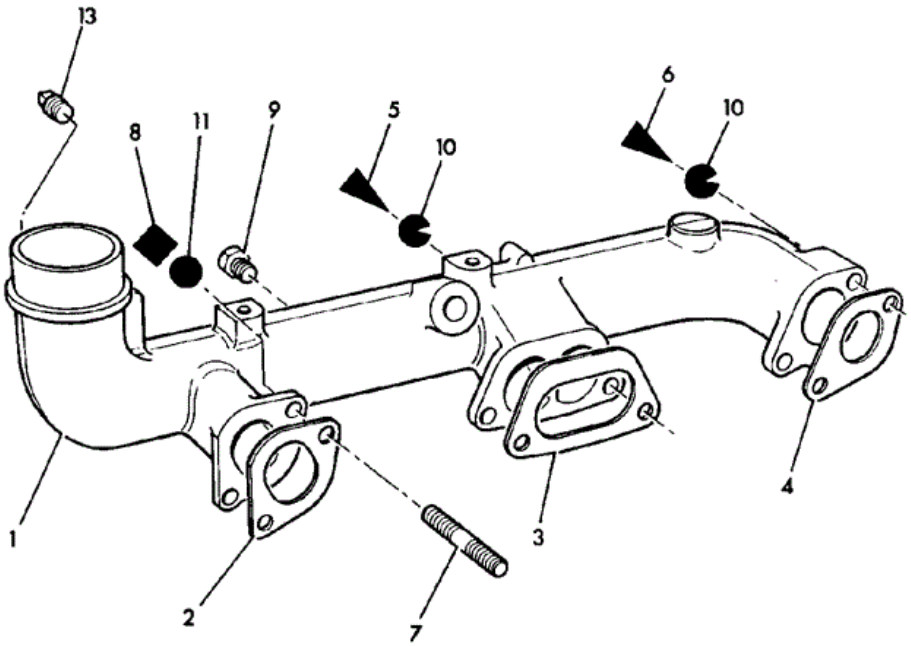

Item	Part #	Change No	Description	Usage Code	QTY
1	02/100045		Manifold Induction		1
2	02/100046		Gasket		1
3	02/100047		Gasket		1

4	02/100048		Gasket		1
5	1305/3207		Bolt		4
6	1305/3218Z		Bolt		1
7	822/00123		Stud		1
8	1340/0201Z		Nut		1
9	1305/0203Z		Bolt		1
10	823/00269		Washer spring		6
11	823/00273		Washer		1
13	816/83005		Plug		1

9802/7600 L3-2-1 MANIFOLD, EXHAUST LD BUILD

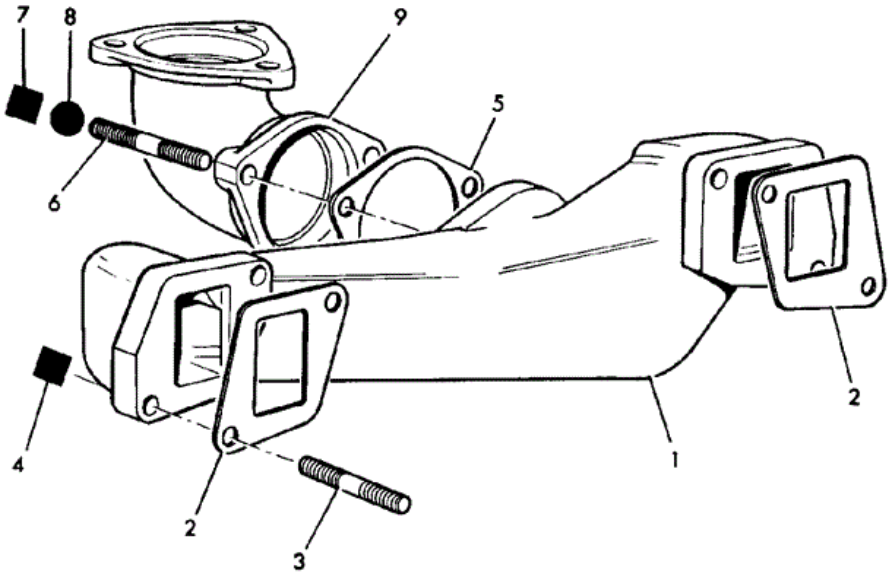

J64490

Item	Part #	Change No	Description	Usage Code	QTY
1	02/100049		Manifold Exhaust		1
2	02/100050		Gasket		2
3	822/00120		Stud		4

4	02/100051		Nut		4
5	02/100052		Gasket		1
6	822/00124		Stud		3
7	02/100333		Nut		3
8	823/00274		Washer		3
9	02/100181		Elbow		1

9802/7600 L3-4-23 FILTER, AIR

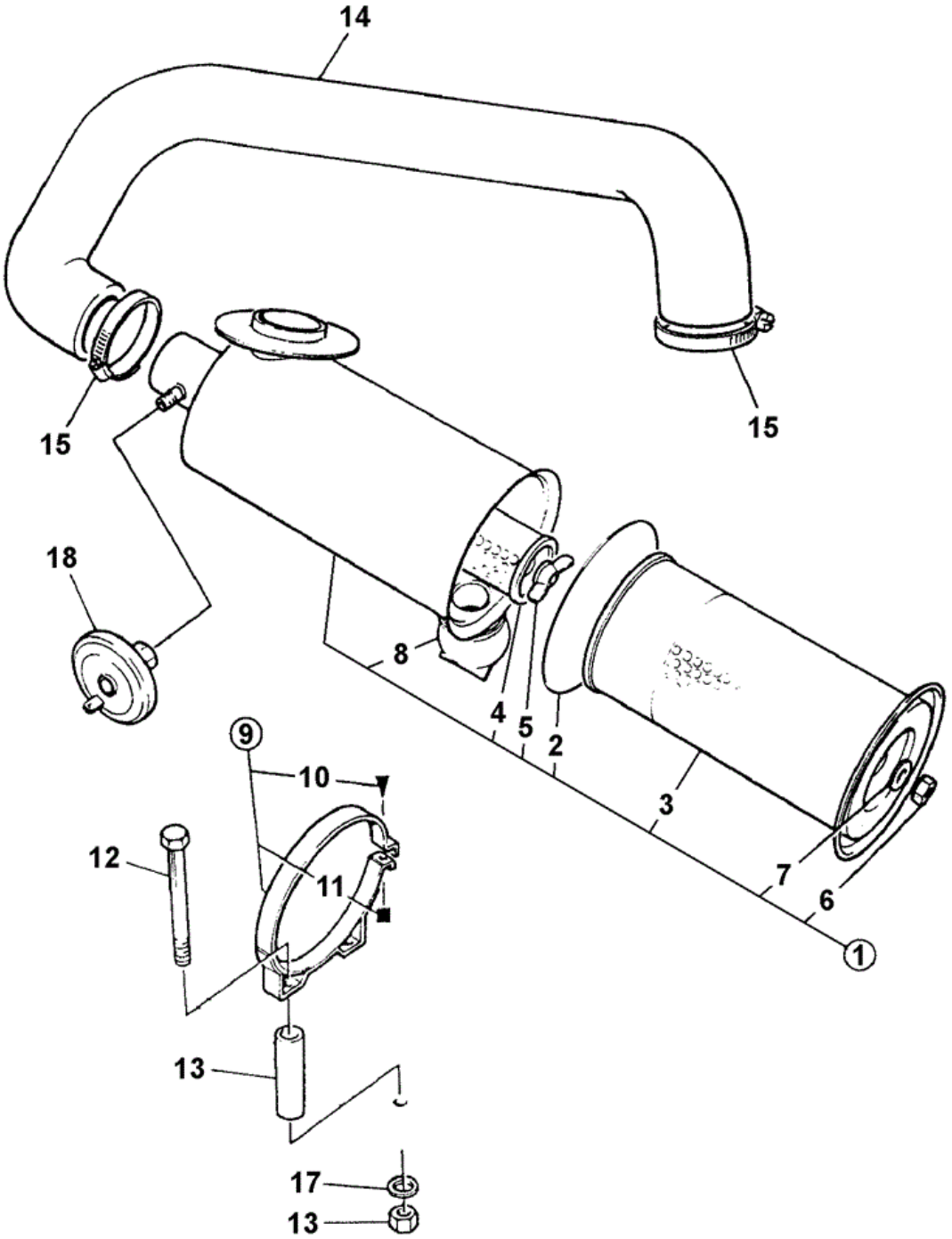

Item	Part #	Change No	Description	Usage Code	QTY
1	32/207100		Filter assembly, air		1
2	:32/911101		Seal moisture		1
3	:32/206002		Element air-primary		1

4	:32/206003		Element air-safety		1
5	:32/206004		Nut		1
6	:32/206005		Nut wing		1
7	:32/206006		Washer seal		1
8	:32/206007		Valve Dust		1
9	32/206500		Band air filter mounting		2
10	:32/206501		Screw		1
11	:32/206502		Nut		1
12	1305/3226Z		Bolt		4
13	1340/0203Z		Nut Lock 3/8" UNF		4
14	834/00204		Hose		1
15	2201/0013		Clip Jubilee		2
16	655/00325		Spacer		4
17	1410/0003Z		Washer (3/8" Small)		4
18	701/09100		Switch Vacuum		1
19	816/35003		Adapter		1
20	190/34401		Tube Extension		1
21	32/207300		Filter pre-cleaner		1
22	:32/206201		Bowl		1
23	:32/206202		Cover & wing nut		1
24	2201/0014		Clip Worm Drive		1
25	813/00328		Seal		1

Thank you so much for reading.

Please click the “Buy Now!” button below to download the complete manual.

Buy Now

After you pay.

You can download the most perfect and complete manual in the world immediately.

Our support email:

ebooklibonline@outlook.com