9802/5820 T1-3-1 BLOCK ASSEMBLY

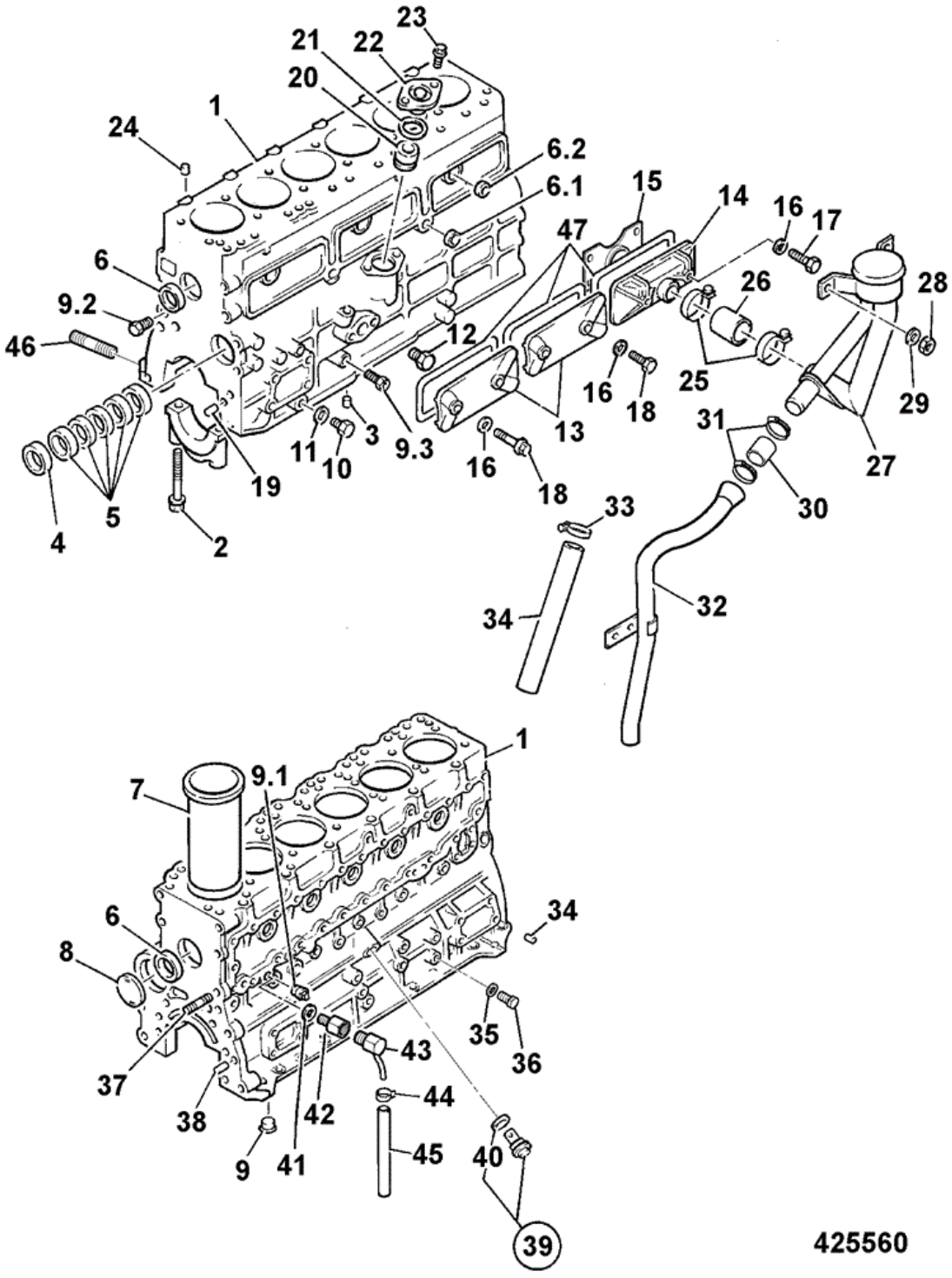

Item	Part #	Change No	Description	Usage Code	QTY
1	02/801540		Block cylinder,assembly		1
2	:02/801541		Bolt		14

3	:02/800012		Dowel		1
4	:9116910480		Bearing camshaft, front		1
5	:9116930350		Bearing centre & rear		5
6	:1096000520		Plug d=60		2
6-1	:5112190140		Plug d=28		2
6-2	:1096000121		Plug tappet chamber, D=32		3
7	:02/801542		Liner cylinder		6
8	9098600190		Plug		1
9	1096050660		Plug D=3/8"		1
9-1	5096050180		Plug D=1/8"		11
9-2	1096050681		Plug		1
9-3	1096050681		Plug		1
10	9992023140		Plug		1
11	9095720140		Washer seal		1
12	1096601010		Connector		1
13	02/801548		Cover tappet chamber		2
14	02/801549		Cover tappet chamber		1
15	02/801552		Plate guide,tappet chamber		1
16	9095720080		Washer seal		6
17	1090520221		Bolt L=84		2
18	02/800007		Bolt L=56		4
19	02/800013		Pin D=10 X L=50		1
20	9112246021		Bush oil pump drive shaft		1
21	1096234650		O Ring		1
22	1112191291		Cover oil pump		1
23	0501408220		Bolt		2
24	8941480790		Dowel D=16		2
25	02/801545	<04/2003	Clip jubilee ID=45		3
25	5097040313	>05/2003	Clip hose		1
26	02/801547		Hose breather-cover L=53		1
27	02/801543		Breather engine oil		1
28	02/800882		Nut		2
29	9091646080		Washer plain		2
30	02/801550		Hose breather-pipe		1
31	02/801546		Clip jubilee ID=48		1
31-2	02/801545		Clip jubilee ID=45		1
32	02/801544		Pipe drain		1
33	9099156661		Clip hose		1
34	9081508160		Pin		2
34	9097130740	Superseded	Hose drain		1
34	02/800061		Tube		1
35	02/801551		Washer seal		1
36	9992023120		Plug M12X9		1
37	5093000231		Stud		1
38	9081510180		Pin D=10 x L=18		2
39	8970233390		Valve oil relief, assembly		1
40	:5096230350		O Ring		1
41	1096301150		Washer seal		1
42	1096660360		Connector		1
43	1096800240		Tap water drain		1
44	8970157540		Clip hose		1

45	02/800619		Pipe oil drain		1
46	1093000550		Stud L1=45		1
47	1112920200		Gasket		3

9802/5820 T1-4-1 CRANKSHAFT, BEARINGS PISTONS & CON-RODS

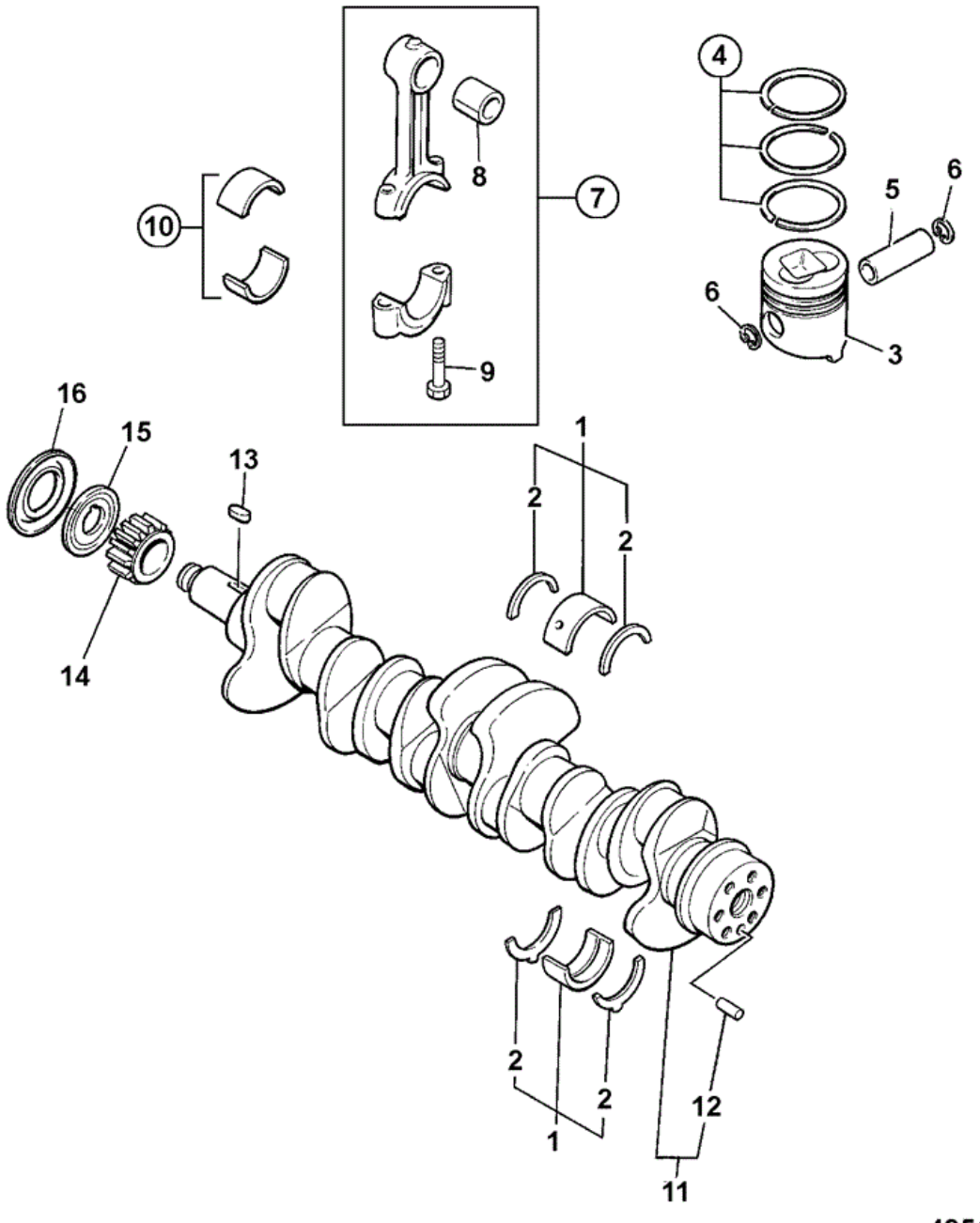

Item	Part #	Change No	Description	Usage Code	QTY
1	02/801514		Kit-main bearing standard		1

2	:02/801515		Kit-thrust washer standard		2
3	02/801516	<FEB.2003	Piston grade=AX		0
3	02/801641	>MAR.2003	Piston AX grade		0
3	02/801517	<FEB.2003	Piston grade=CX		0
3	02/801642	>MAR.2003	Piston piston CX grade		0
4	02/801518		Kit-piston ring standard		6
5	02/800305		Pin gudgeon		6
6	02/801519		Ring snap,piston pin		12
7	02/800310		Rod connecting, assembly		6
8	:02/800306		Bush small end		1
9	:1122350271		Bolt		2
10	9122716080		Kit-big end Standard		6
10	9122736080		Kit-big end undersize - 0.25		0
10	9122746080		Kit-big end undersize - 0.50		0
11	1123104700		Crankshaft assembly		1
12	:9081512200		Pin		1
13	5097380010		Key		1
14	02/800318		Gear crankshaft		1
15	1123620031		Flinger oil		1
16	5123620031		Seal dust, thrower		1

9802/5820 T1-5-1 FANS, PULLEYS & FAN BELT

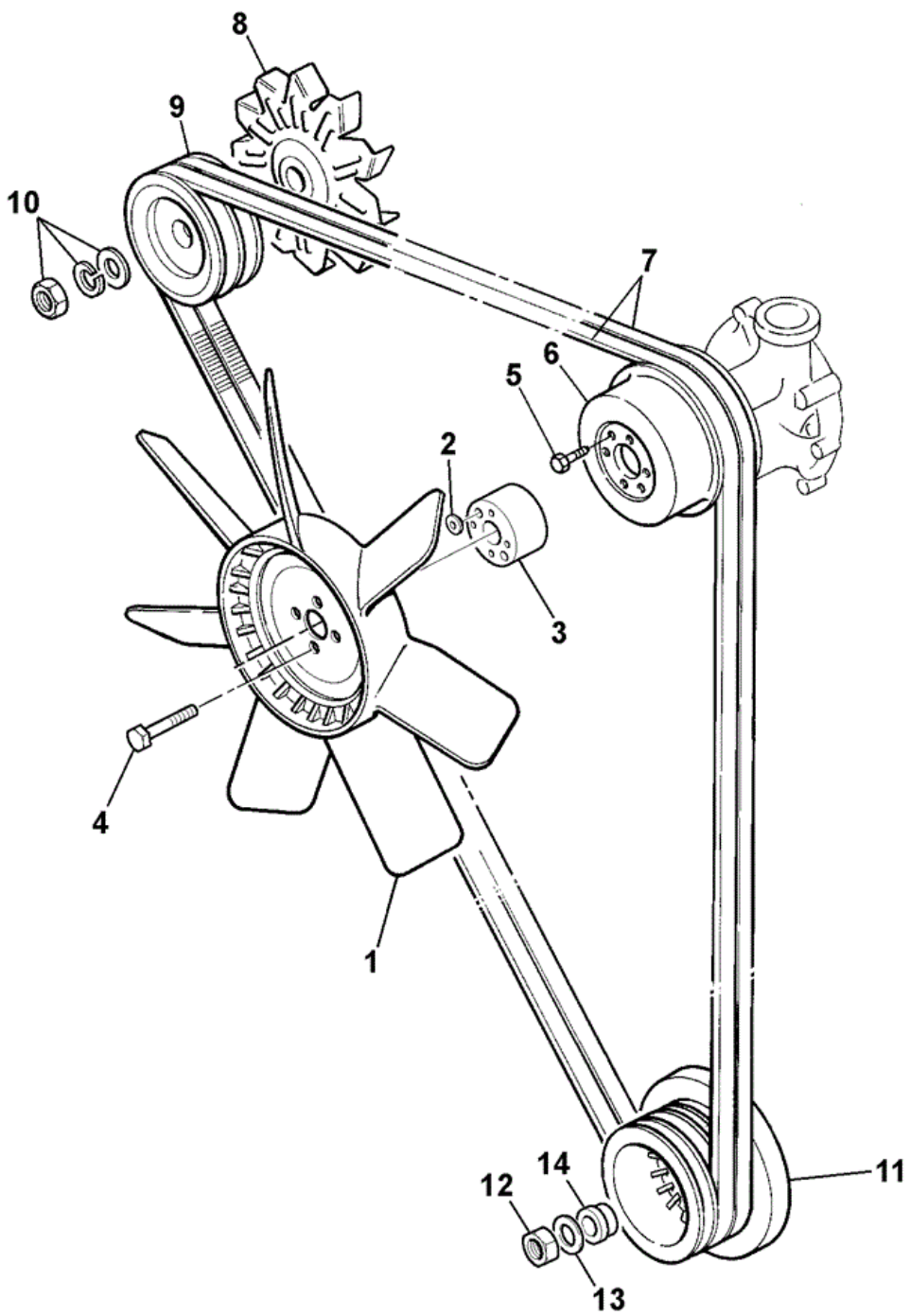

425051

Item	Part #	Change No	Description	Usage Code	QTY
1	30/925695		Fan 24" cooling		1
2	331/35722		Collar fan mounting		1

3	331/35419	Superseded	Spacer fan		1
3	829/31408	>JAN-2006	Spacer fan heavy duty pump		1
4	1315/3319Z		Bolt M8 x 90 mm		4
5	9034906100		Screw		2
6	02/801500		Pulley water pump		1
7	02/801499		Belt fan, (PAIR) L=1256		1
8	1812230050		Fan alternator *Alternator, See Section C2*		1
9	1812220550	Superseded	Pulley alternator *Alternator, See Section C2*		1
9	714/25101		Pulley alternator twin groove		1
10	****		'See Remark' *Alternator, See Section C2*		1
11	1123712480		Pulley crankshaft		1
12	9098401071		Nut		1
13	9098514310		Washer		1
14	02/801586		Bush		1

9802/5820 T1-5-2 FANS,PULLEYS & FAN BELT EU ONLY

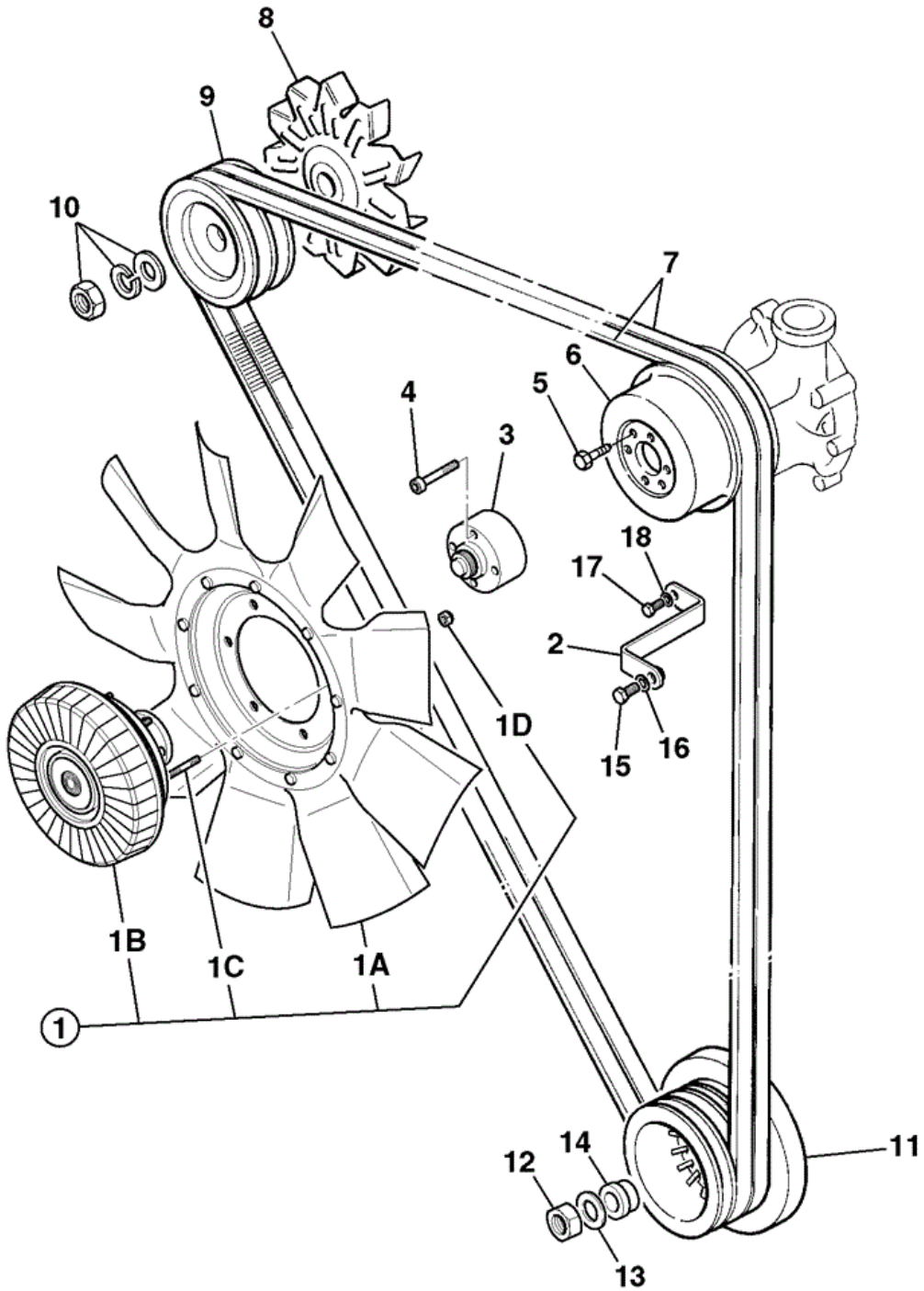

819071

Item	Part #	Change No	Description	Usage Code	QTY
1	30/926602		Fan viscous drive 610mm dia		1
1A	:30/927053		Fan 610mm dia		1

1B	:30/927047		Coupling viscous fan		1
1C	:30/927058		Bolt		6
1D	:30/927041		Sensor anti-rotation c/w fittings and Bracket		1
2	335/10787		Bracket cable retention		1
3	829/31407		Spacer fan viscous drive		1
4	1391/3312D		Capscrew M8 x 50mm		4
5	9034906100		Screw		2
6	02/802029		Pulley water pump		1
7	02/801499		Belt fan, (PAIR) L=1256		1
8	714/27220		Fan generator *Alternator see section C2*		1
9	714/25101		Pulley alternator twin groove *Alternator see section C2*		1
10	****		'See Remark' *Alternator see section C2*		1
11	1123712480		Pulley crankshaft		1
12	9098401071		Nut		1
13	9098514310		Washer		1
14	02/801586		Bush		1
15	1316/0203D		Screw		1
16	1420/0006D		Washer (M6)		1
17	1316/0405D		Screw M10 x 20		1
18	1420/0008D		Washer (M10)		1

9802/5820 T1-6-1 CAMSHAFT & GEARS TIMING CASE

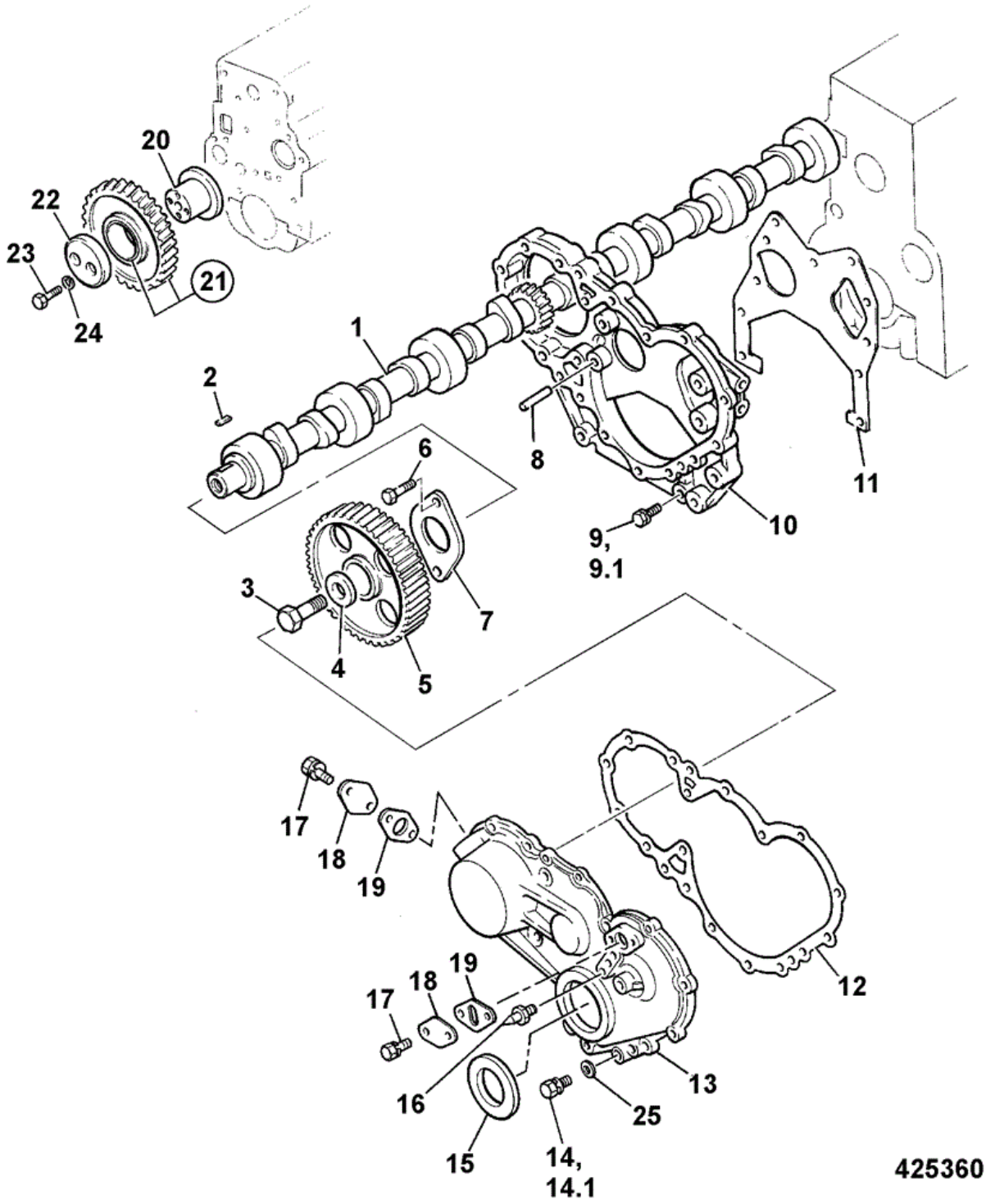

Item	Part #	Change No	Description	Usage Code	QTY
1	02/800431	<JAN.2003	Camshaft		1
1	02/801705	>FEB.2003	Camshaft		1

2	9080307130		Key		1
3	9920614280		Bolt		1
4	02/800009		Washer cam		1
5	02/801528		Gear camshaft		1
6	0500408250		Bolt		2
7	9116810150		Plate thrust		1
8	9081510180		Pin D=10 x L=18		1
9	02/800915		Bolt flange head M8 X 45mm		2
9-1	02/800949		Bolt flange head M8 X 20mm		4
10	5113110113		Casing timing		1
11	02/800322		Gasket timing case		1
12	02/801527		Gasket timing cover		1
13	1113210790		Cover timing		1
14	02/801303		Bolt flange head M8 x 50		3
14-1	02/800911		Bolt flange head M8 X 25mm		6
15	1096254380		Seal oil, front		1
16	5113270090		Pointer timing		1
17	0280806120		Bolt flange head M6 x 12		4
18	02/800254		Cover inspection		2
19	02/800430		Gasket inspection cover		2
20	9125310300		Hub idler gear		1
21	02/800327		Gear idler		1
22	5125350011		Collar thrust		1
23	0108110550		Bolt		2
24	9091505100		Washer spring		2
25	9091605080		Washer plain		5

9802/5820 T1-7-1 FLYWHEEL & HOUSING

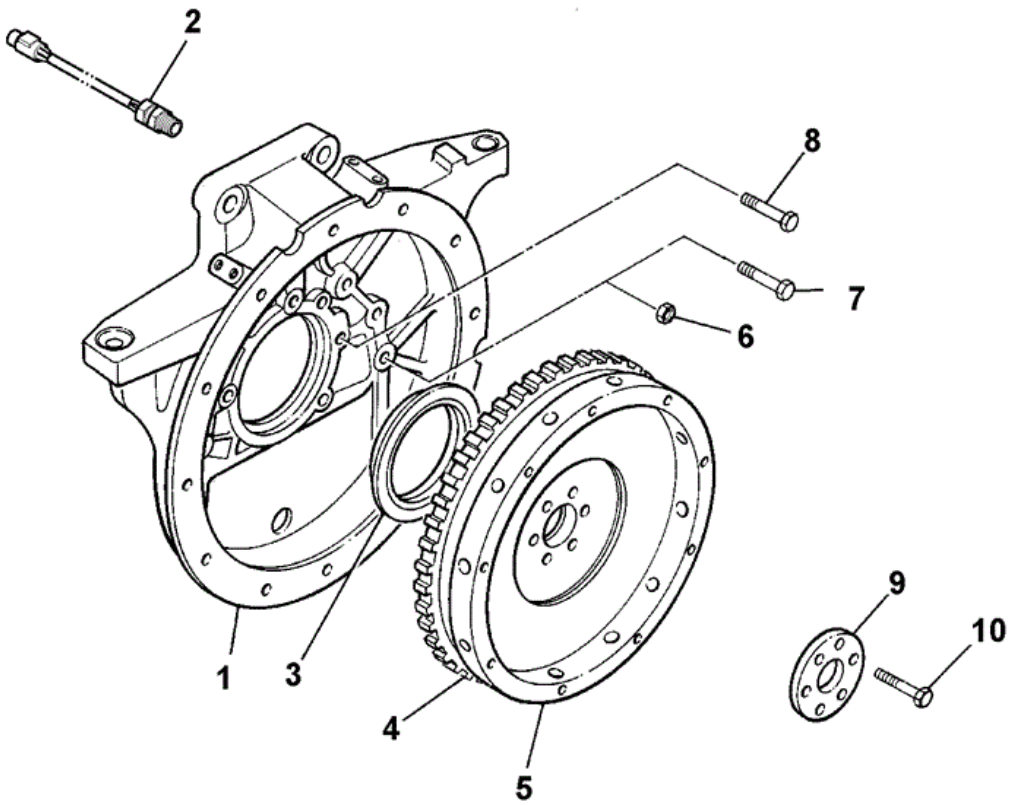

425230

Item	Part #	Change No	Description	Usage Code	QTY
1	02/801521		Housing flywheel		1
2	701/54300		Switch sender tacho		1

3	02/801525		Seal oil,rear		1
4	1123330170		Gear ring		1
5	02/800433		Flywheel assembly		1
6	02/801522		Nut		1
7	0500408250		Bolt		7
8	02/801523		Bolt M14 x 45		5
8	02/801524		Bolt M14 x 60		2
9	5123360081		Washer		1
10	9920616380		Bolt		6

9802/5820 T1-8-1 ENGINE MOUNTINGS

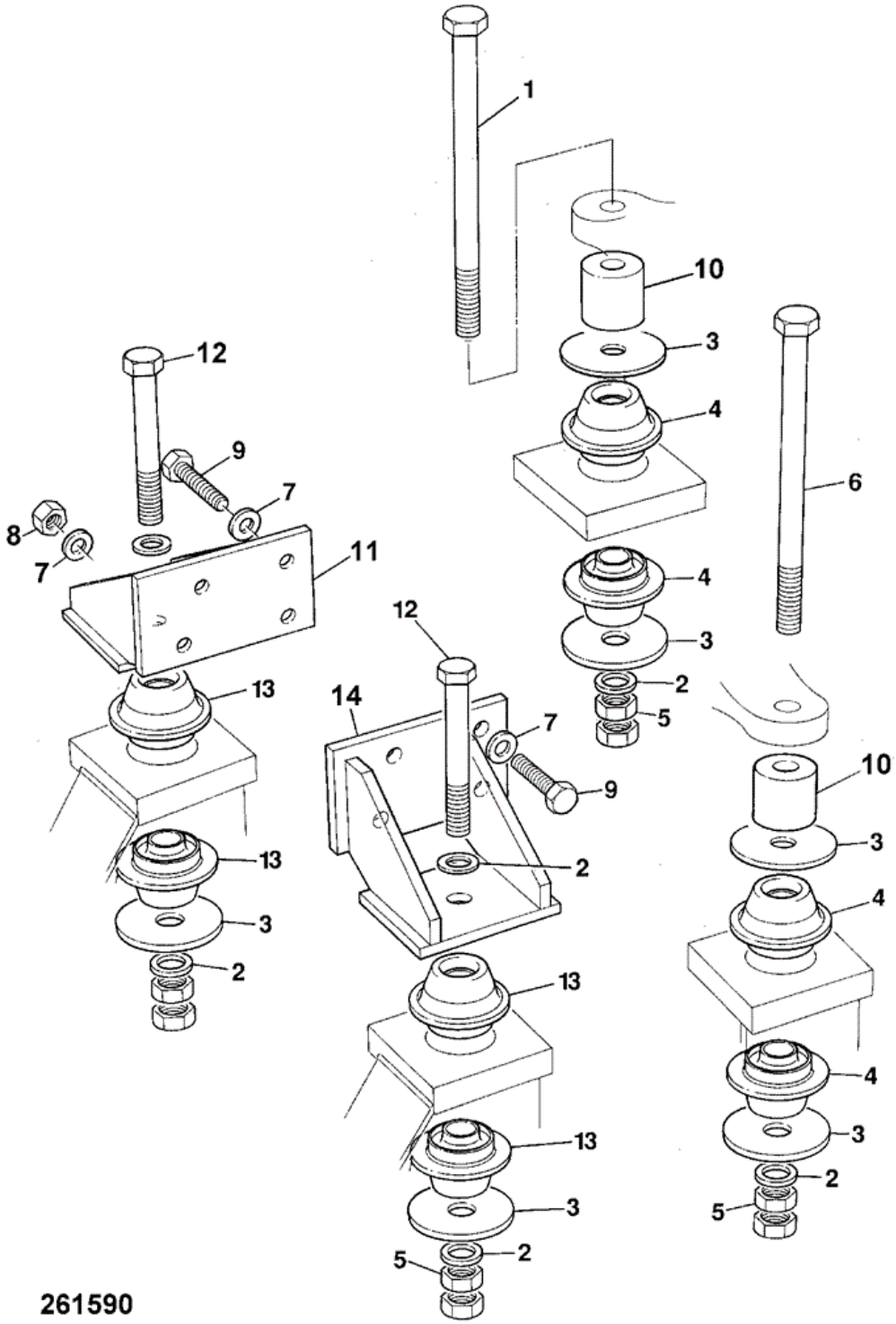

Item	Part #	Change No	Description	Usage Code	QTY
1	1316/3731Z		Bolt M16 x 220		1
2	JHP0043		Washer M16		6

3	KNH0589		Plate		6
4	KRH0780		Mounting metalastik *Colour coded blue*		1
5	162R016VZ		Nut high strength		8
6	1316/3731Z		Bolt M16 x 220		1
7	JHP0046		Washer M10		8
8	C4E7863		Nut High Strength		1
9	KEH0122		Bolt high strength		7
10	KRH0479		Spacer		2
11	KNH0527		Bracket engine mounting		1
12	1316/3724Z		Bolt		2
13	KRH0781		Mounting metalastik *Colour coded yellow*		4
14	KNH0586		Bracket engine mounting		1

Thank you so much for reading.

Please click the “Buy Now!” button below to download the complete manual.

After you pay.

You can download the most perfect and complete manual in the world immediately.

Our support email:

ebooklibonline@outlook.com