JOHN DEERE
WORLDWIDE COMMERCIAL & CONSUMER EQUIPMENT DIVISION

Compact Utility Tractors
3036E

OMLVU24839 D1

OPERATOR'S MANUAL

JOHN DEERE

European Version
Litho in U.S.A.

Introduction

Thank You for Purchasing a John Deere Product

We appreciate having you as a customer and wish you many years of safe and satisfied use of your machine.

Using Your Operator's Manual

This manual is an important part of your machine and should remain with the machine when you sell it.

Reading your operator's manual will help you and others avoid personal injury or damage to the machine. Information given in this manual will provide the operator with the safest and most effective use of the machine. Knowing how to operate this machine safely and correctly will allow you to train others who may operate this machine.

If you have an attachment, use the safety and operating information in the attachment operator's manual along with the machine operator's manual to operate the attachment safely and correctly.

This manual and safety signs on your machine may also be available in other languages (see your authorized dealer to order).

Sections in your operator's manual are placed in a specific order to help you understand all the safety messages and learn the controls so you can operate this machine safely. You can also use this manual to answer any specific operating or servicing questions. A convenient index located at the end of this book will help you to find needed information quickly.

The machine shown in this manual may differ slightly from your machine, but will be similar enough to help you understand our instructions.

RIGHT-HAND and LEFT-HAND sides are determined by facing in the direction the machine will travel when going forward. When you see a broken line (------), the item referred to is hidden from view.

Before delivering this machine, your dealer performed a predelivery inspection to ensure best performance.

Machine Use

This machine is designed solely for use in customary agricultural use, for park and amenity area maintenance, and for winter work. Use in any other way is considered as contrary to the intended use.

This machine is not intended for use in forestry operations. The operator station does not provide adequate protection to the occupants in that environment.

The cab available from the manufacturer is not designed to provide adequate protection from hazardous substances. The operator must wear appropriate personal protection equipment.

The manufacturer accepts no liability for damage or injury resulting from this misuse, and these risks must be borne solely by the user. Compliance with and strict adherence to the conditions of operation, service and repair as specified by the manufacturer also constitute essential elements for the intended use.

This machine should be operated, serviced and repaired only by persons familiar with all its particular characteristics and acquainted with the relevant safety rules (accident prevention). The accident prevention regulations, all other generally recognized regulations on safety and occupational medicine and the road traffic regulations must be observed at all times.

Setting fuel delivery beyond published factory specifications or otherwise overpowering will result in loss of warranty protection for this machine.

Any arbitrary modifications carried out on this machine will relieve the manufacturer of all liability for any resulting damage or injury.

Special Messages

Your manual contains special messages to bring attention to potential safety concerns, machine damage as well as helpful operating and servicing information. Please read all the information carefully to avoid injury and machine damage.

CAUTION: Avoid injury! This symbol and text highlight potential hazards or death to the operator or bystanders that may occur if the hazards or procedures are ignored.

IMPORTANT: Avoid damage! This text is used to tell the operator of actions or conditions that might result in damage to the machine.

NOTE: General information is given throughout the manual that may help the operator in the operation or service of the machine.

Record Identification Numbers

Compact Utility Tractor

3036E PIN (301620 -)

If you need to contact an Authorized Service Center for information on servicing, always provide the product model and identification numbers.

You will need to locate the identifications numbers for the product. Record the information in the spaces provided below.

DATE OF PURCHASE:

_____

DEALER NAME:

_____

DEALER PHONE:

_____

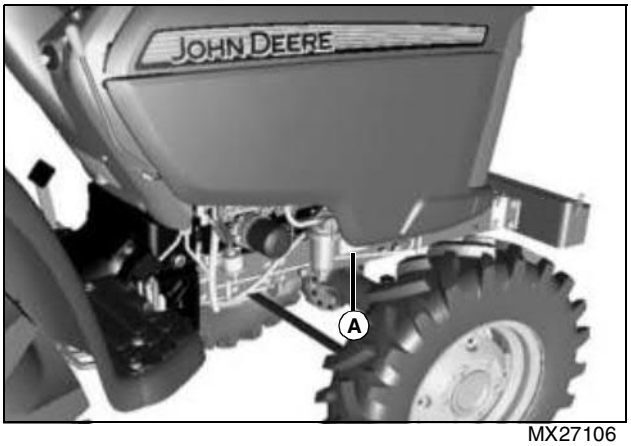

MX27106

PRODUCT IDENTIFICATION NUMBER (A):

__ __ __ __ __ __ __ __ __ __ __ __ __ __ __ __

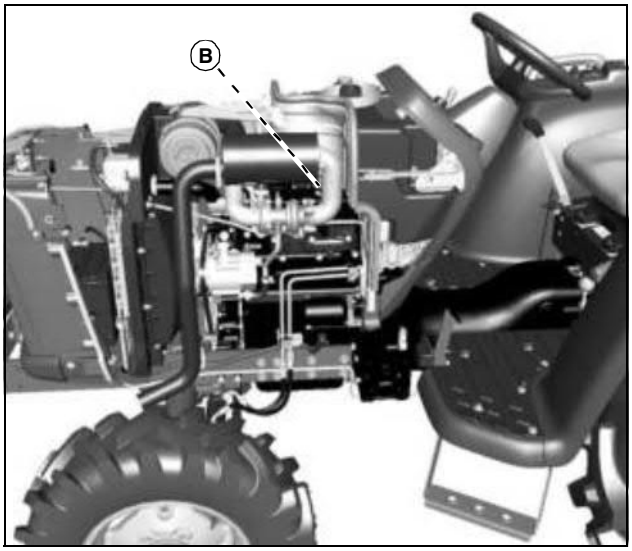

MX40657

ENGINE SERIAL NUMBER (B):

__ __ __ __ __ __ __ __ __ __ __ __ __ __ __ __

Table of Contents

Safety Labels 1
Safety 4
Operating Controls 10
Operating 12
Replacement Parts 29
Service Intervals 30
Service Lubrication 31
Service Engine 32
Service Transmission 43
Service Electrical 47
Service Miscellaneous 51
Troubleshooting 57
Storage 62
Specifications 63
Declaration of Conformity 68
Index 69

Original Instruction

All information, illustrations and specifications in this manual are based on the latest information at the time of publication. The right is reserved to make changes at any time without notice.

OMLVU24839 D1 -

Safety Label Location

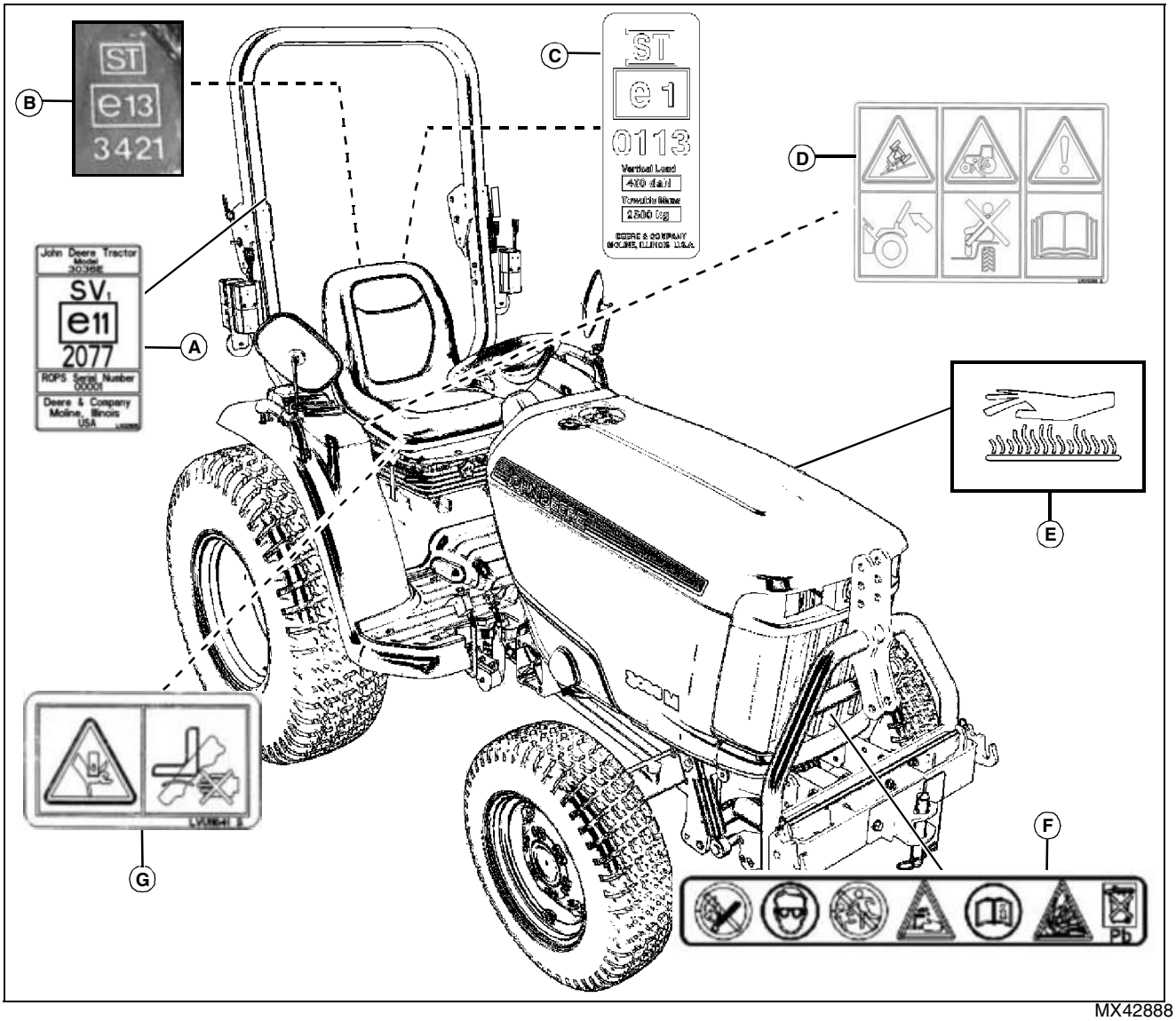

MX42888

Picture Note: Use label number listed in table below to locate complete text of safety label message following this illustration.

A - ROLLOVER CERTIFICATION PLATE LVU21105

B - WAGON HITCH EEC INFORMATION (stamped into hitch)

C - DRAWBAR EEC LABEL LVU17318

D - WARNING / CAUTION LVU13286

E - CAUTION HOT SURFACE (embossed on muffler)

F - DANGER/POISION (on battery)

G - CAUTION LVU11641

Pictorial Safety Signs

At several important places on this machine safety signs are affixed intended to signify potential danger. The hazard is identified by a pictorial in a warning triangle. An adjacent pictorial provides information how to avoid personal injury. These safety signs, their placement on the machine and a brief explanatory text are shown in this Safety section.

There can be additional safety information contained on parts and components sourced from suppliers that is not reproduced in this operator's manual.

Thank you so much for reading.

Please click the “Buy Now!” button below to download the complete manual.

Buy Now

After you pay.

You can download the most perfect and complete manual in the world immediately.

Our support email:

ebooklibonline@outlook.com