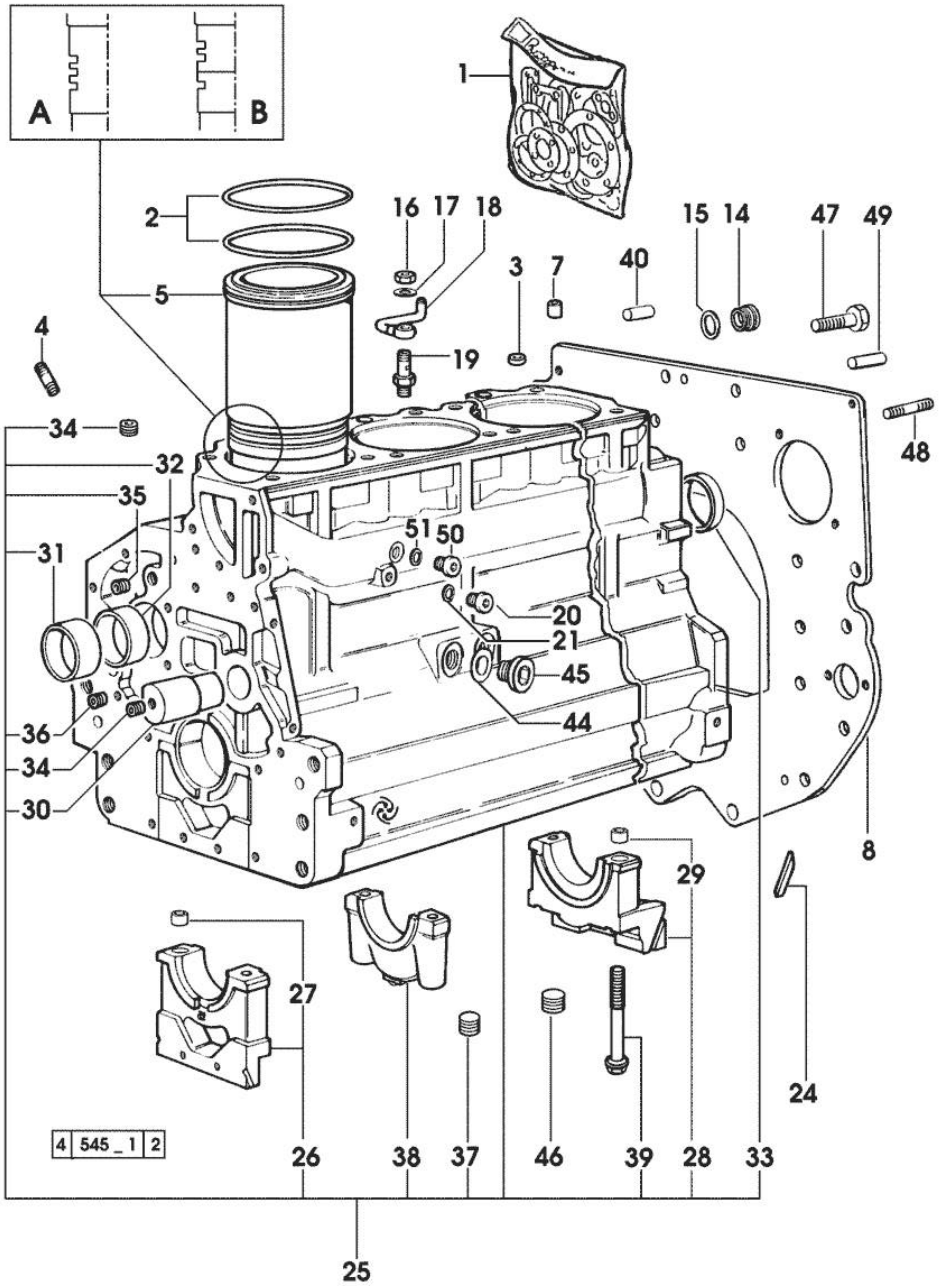


**874-90T GRAND PRIX**

Section: ENGINE Ref: 01.00.1

## CRANKCASE

| Fig. | P/n | QTY | Name |
|---|---|---|---|
| | | | **Notes:**<br>[874-90T GRAND PRIX] |
| 1 | 0.089.0050.6 | 1 | gasket set<br>- X 674-70 - 774-80<br>- FOR ENGINE MOUNTING |
| 1 | 0.090.0050.6 | 1 | gasket set<br>- X 874-90T<br>- FOR ENGINE MOUNTING |
| 2 | 2.1519.096.0/20 | 12 | special oil seal 107.67x1.78<br>25065 <= X 674-70<br>24928 <= X 774-80<br>6740 <= X 874-90 |
| 2 | 2.1539.193.0 | 8 | special oil seal 107.62x2.62<br>=> 25066 X 674-70<br>=> 24929 X 774-80<br>=> 6741 X 874-90 |
| 3 | 2.1559.188.2 | 4 | bush 11.4 x 14 x16 |
| 4 | 2.0432.003.7 | 12 | stud bolt m 8 p.1.25 / p.1 x 20 |
| 5 | 0.009.7500.0/10 | 4 | engine cylinder<br>= A<br>17700 <= X 674-70 - 774-80<br>5428 <= X 874-90 |
| 5 | 0.011.0183.0/20 | 4 | engine cylinder<br>=> 25066 X 674-70<br>=> 24929 X 774-80<br>=> 6741 X 874-90 |
| 5 | 0.011.0582.0 | 4 | engine cylinder<br>= B<br>=> 17701 - 25065 <= X 674-70<br>=> 17701 - 24928 <= X 774-80<br>=> 5429 - 6740 <= X 874-90 |
| 7 | 2.1549.154.2 | 4 | bush 4.8x5.8x16 |
| 8 | 0.066.1130.0/20 | 1 | flange |
| 14 | 2.3199.405.2 | 1 | plug m 28 p.1.5 |
| 15 | 2.1539.047.0 | 1 | special oil seal 26.7x1.78 |
| 16 | 2.1099.108.2 | 4 | special nut m 10 p.1 |
| 17 | 2.1560.006.0 | 8 | gasket 10.2 x 16 |
| 18 | 0.086.1550.2 | 4 | sprayer nozzle |
| 19 | 0.065.1160.3/20 | 4 | valve |
| 20 | 2.3199.292.0 | 1 | plug 1/4" gas |
| 21 | 2.1560.010.0 | 1 | gasket 14.2 x 20 |
| 24 | 0.066.1152.0/10 | 4 | gasket |
| 25 | 0.082.1110.6/20 | 1 | crankcase |

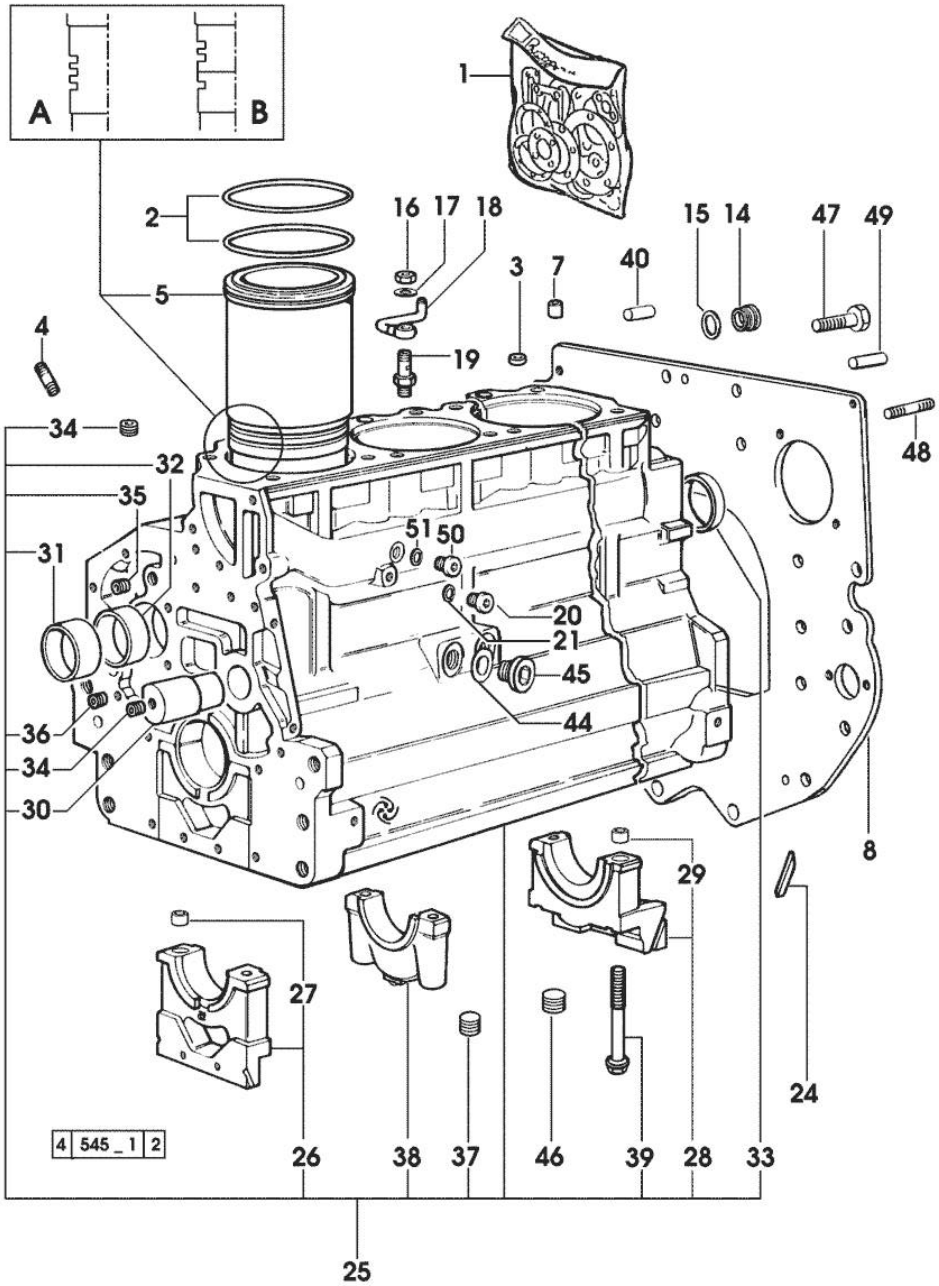


**874-90T GRAND PRIX**

Section: ENGINE Ref: 01.00.1

## CRANKCASE

| Fig. | P/n | QTY | Name |
|---|---|---|---|
| | | | * 25065 <= X 674-70 |
| | | | * 24928 <= X 774-80 |
| | | | * 6740 <= X 874-90 |
| | | | - N.4 011.0183.0/10 - N.8 2.1539.193.0 |
| 26 | 0.065.1112.7 | 1 | support |
| 27 | 2.1699.165.0 | 1 | bush 12.3x15x16 |
| 28 | 0.065.1116.3 | 1 | support |
| 29 | 2.1699.165.0 | 1 | bush 12.3x15x16 |
| 30 | 0.066.1151.0 | 1 | pin |
| 31 | 0.065.1141.0 | 1 | special bushing 59X55X30 |
| 32 | 0.065.1140.0 | 4 | special bushing 59X55X20 |
| 33 | 2.3179.012.0 | 1 | plug 60 |
| 34 | 2.3130.001.1 | 11 | plug 1/8" gas |
| 35 | 2.3130.002.1 | 2 | plug 1/4" gas |
| 36 | 2.3130.003.1 | 5 | plug 3/8" gas |
| 37 | 2.1324.011.0 | 1 | plug |
| 38 | 0.065.1114.0/10 | 3 | support |
| 39 | 0.065.1117.0 | 10 | screw m 12 x 100 |
| 40 | 2.1651.912.0 | 2 | cylindrical plug 12x28 |
| 44 | 2.1560.017.0 | 1 | gasket 22.2 x 27 |
| | | | - X 674-70 - 774-80 |
| 45 | 2.3120.002.4 | 1 | plug m 22 x 1.5 |
| | | | - X 674-70 - 774-80 |
| 46 | 2.3130.003.1 | 2 | plug 3/8" gas |
| 47 | 2.0112.511.2 | 8 | screw m 14 p.2 x 30 |
| 48 | 2.0432.255.7 | 2 | stud bolt m 12 p.1.75-1.25x25 |
| 49 | 2.1651.917.0 | 1 | cylindrical plug 12x40 |
| 50 | 2.3120.101.0 | 1 | plug m 18 p.1.5 |
| | | | => 25066 X 674-70 |
| | | | => 24929 X 774-80 |
| | | | => 6741 X 874-90 |
| 51 | 2.1560.014.0 | 1 | washer 18.2 x 24 |

Section: ENGINE Ref: 01.00.4

## TIMING CASE

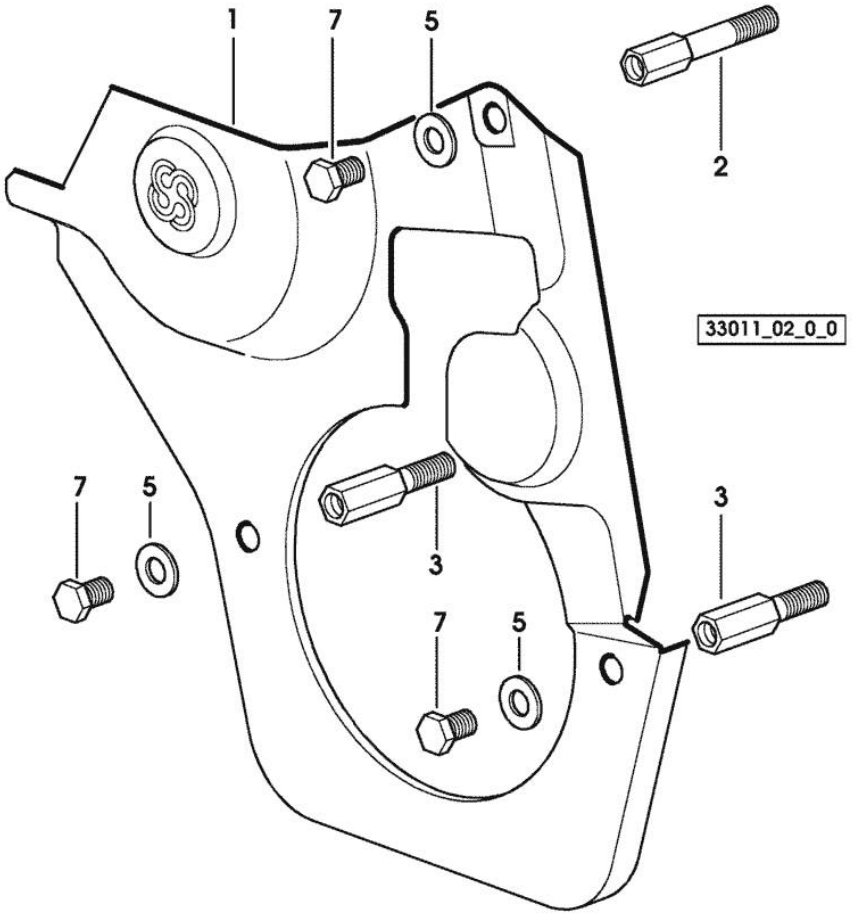


| Fig. | P/n | QTY | Name |
|---|---|---|---|

**Notes:**
[874-90T GRAND PRIX]

| | | | |
|---|---|---|---|
| 1 | 0.007.1262.3/50 | 1 | guard |
| 2 | 0.007.1271.0/10 | 1 | small column m 8 p.1.25 / L = mm 60 |
| 3 | 0.007.1272.0/10 | 2 | small column m 8 p.1.25 / L = mm 50 |
| 5 | 2.1310.004.2 | 3 | flat washer 8.4x17 |
| 7 | 2.0112.205.2 | 3 | screw m 8 p.1.25 x 16 |

Section: ENGINE Ref: 01.00.7

# TIMING CASE

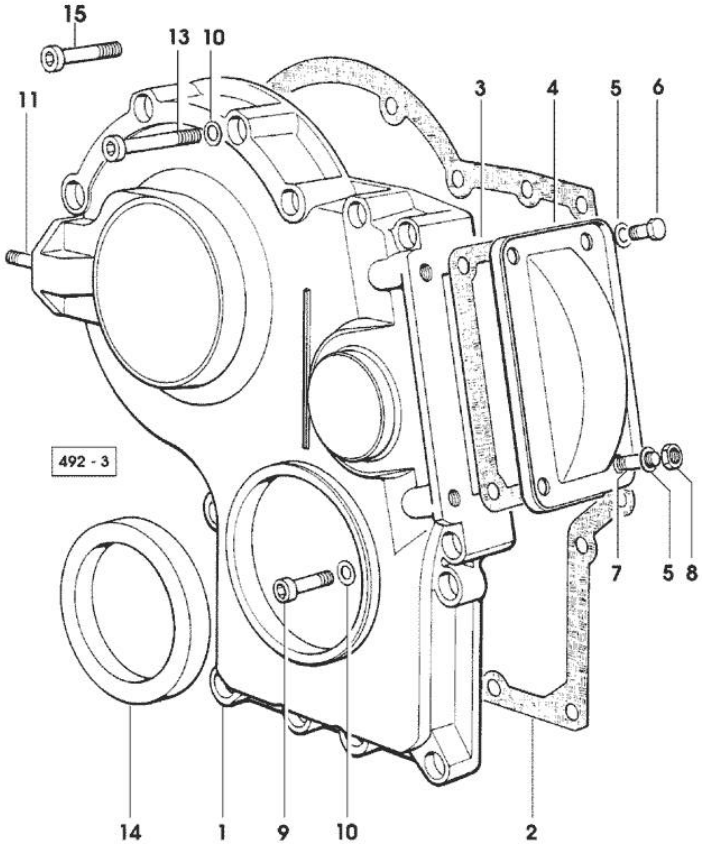


| Fig. | P/n | QTY | Name |
|---|---|---|---|

**Notes:**
[874-90T GRAND PRIX]

| | | | |
|---|---|---|---|
| 1 | 0.065.1132.0/60 | 1 | guard |
| 2 | 0.065.1150.0/30 | 1 | gasket |
| 3 | 0.065.1152.0 | 1 | gasket |
| 4 | 0.065.1151.0 | 1 | cover |
| 5 | 2.1470.004.2 | 4 | lock washer 8 |
| 6 | 2.0112.205.2 | 2 | screw m 8 p.1.25 x 16 |
| 7 | 2.0432.003.7 | 2 | stud bolt m 8 p.1.25 / p.1 x 20 |
| 8 | 2.1011.405.2 | 2 | nut m 8 p.1 |
| 9 | 2.0312.208.2 | 8 | screw m 8 p.1.25 x 25 |
| 10 | 2.1480.014.1 | 15 | washer 8 |
| 11 | 2.0432.003.7 | 2 | stud bolt m 8 p.1.25 / p.1 x 20 |
| 13 | 2.0312.214.2 | 3 | screw m 8 p.1.25 x 40 |
| 14 | 2.1529.141.0 | 1 | special oil seal |
| 15 | 2.0312.214.2 | 4 | screw m 8 p.1.25 x 40 |

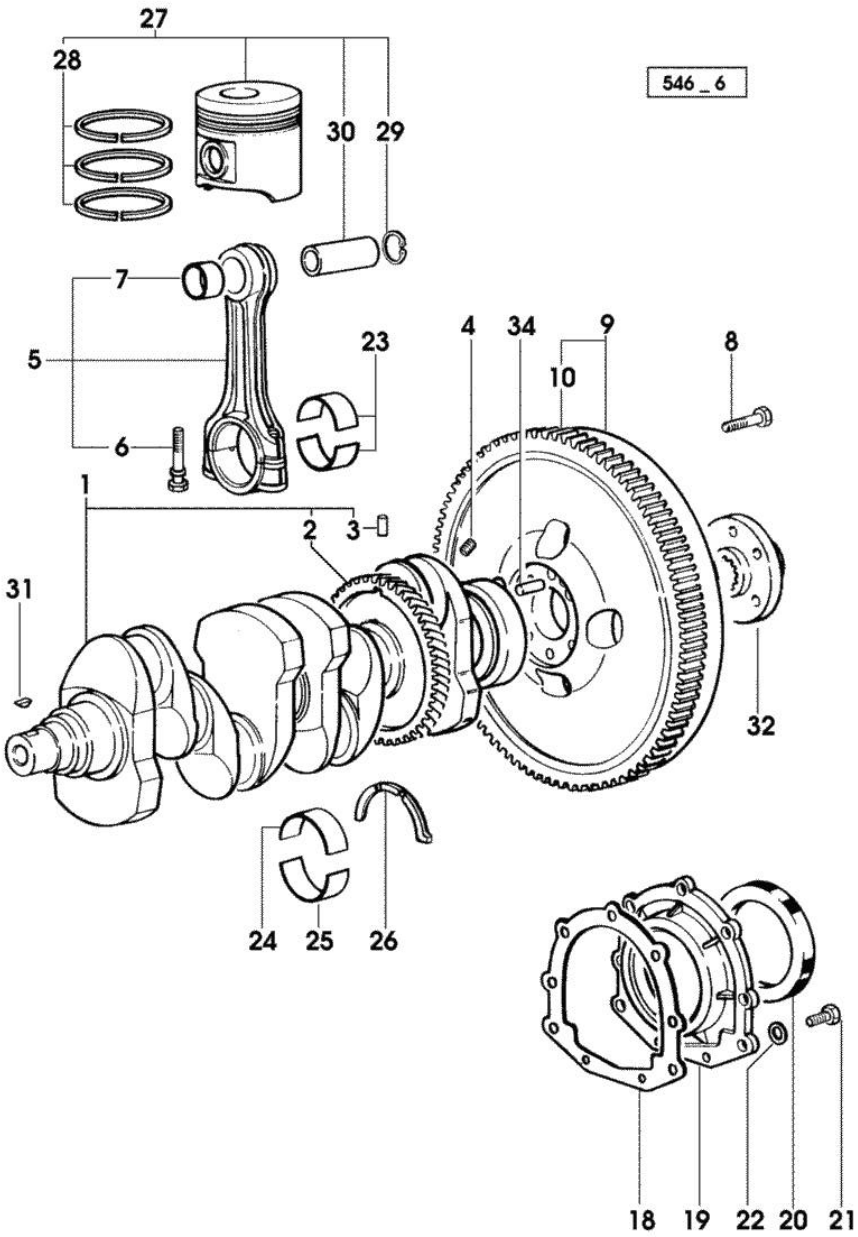


**874-90T GRAND PRIX**

Section: ENGINE Ref: 01.00.13

## CRANKSHAFT

| Fig. | P/n | QTY | Name |
|---|---|---|---|
| **Notes:** | | | |
| [874-90T GRAND PRIX] | | | |
| 1 | 0.086.1210.3/30 | 1 | crankshaft |
| | | | * 14871 <= X 774-80 |
| | | | * 4231 <= X 874-90T |
| | | | - N.1 - 007.1711.0/10 - N.4 - 2.3130.001.1 |
| 2 | 0.065.1211.0/10 | 1 | crown wheel |
| 3 | 2.1630.608.0 | 1 | pin 6x16 |
| 4 | 2.3130.001.1 | 4 | plug 1/8" gas |
| 5 | 0.078.1220.3/30 | 4 | engine connecting rod |
| 6 | 2.0399.213.0 | 8 | screw m 12 p.1.25x61.5 |
| 7 | 2.1559.114.0/10 | 4 | special bushing |
| 8 | 2.0139.022.2 | 6 | screw m 12 p.1.25x55 |
| 9 | 0.007.1702.3/30 | 1 | flywheel |
| | | | -> 21243 X 774-80 |
| | | | -> 22462 X 874-90T |
| 9 | 0.008.4049.3 | 1 | flywheel mm 373 |
| | | | -> 21050 - 21242 <- X 774-80 |
| | | | -> 22079 - 22461 <- X 874-90T |
| 9 | 0.076.1247.3/20 | 1 | flywheel |
| | | | 21049 <- X 774-80 |
| | | | 22078 <- X 874-90T |
| 10 | 0.065.1242.0 | 1 | crown wheel Z = 123 |
| 18 | 0.065.1254.0/20 | 1 | gasket |
| 19 | 0.007.1711.0/10 | 1 | cover |
| | | | => 14872 X 774-80 |
| | | | => 4332 X 874-90T |
| 19 | 0.065.1253.0/20 | 1 | cover |
| | | | 14871 <= X 774-80 |
| | | | 4231 <= X 874-90T |
| 20 | 2.1529.073.0 | 1 | special oil seal 110x130x13 |
| 21 | 2.0112.207.2 | 9 | screw m 8 p 1.25 x 20 |
| 22 | 2.1475.002.2 | 9 | conical washer 8 |
| 23 | 0.065.1225.0 | 8 | con.rod half bushing STANDARD - A = 28.75 -> 29.00 |
| 23 | 0.065.1225.7 | | con.rod half bushing - mm 0.25 |
| 23 | 0.065.1225.8 | | con.rod half bushing - mm 0.50 |
| 24 | 0.065.1215.0 | 5 | main half bushing STANDARD |
| 24 | 0.065.1215.7 | | main half bushing - mm 0.25 |
| 24 | 0.065.1215.8 | | main half bushing - mm 0.50 |
| 25 | 0.065.1216.0 | 5 | main half bushing |
| 25 | 0.065.1216.7 | | main half bushing - mm 0.25 |
| 25 | 0.065.1216.8 | | main half bushing - mm 0.50 |
| 26 | 0.065.1218.0 | 4 | shim STANDARD |

Section: ENGINE Ref: 01.00.13

## CRANKSHAFT

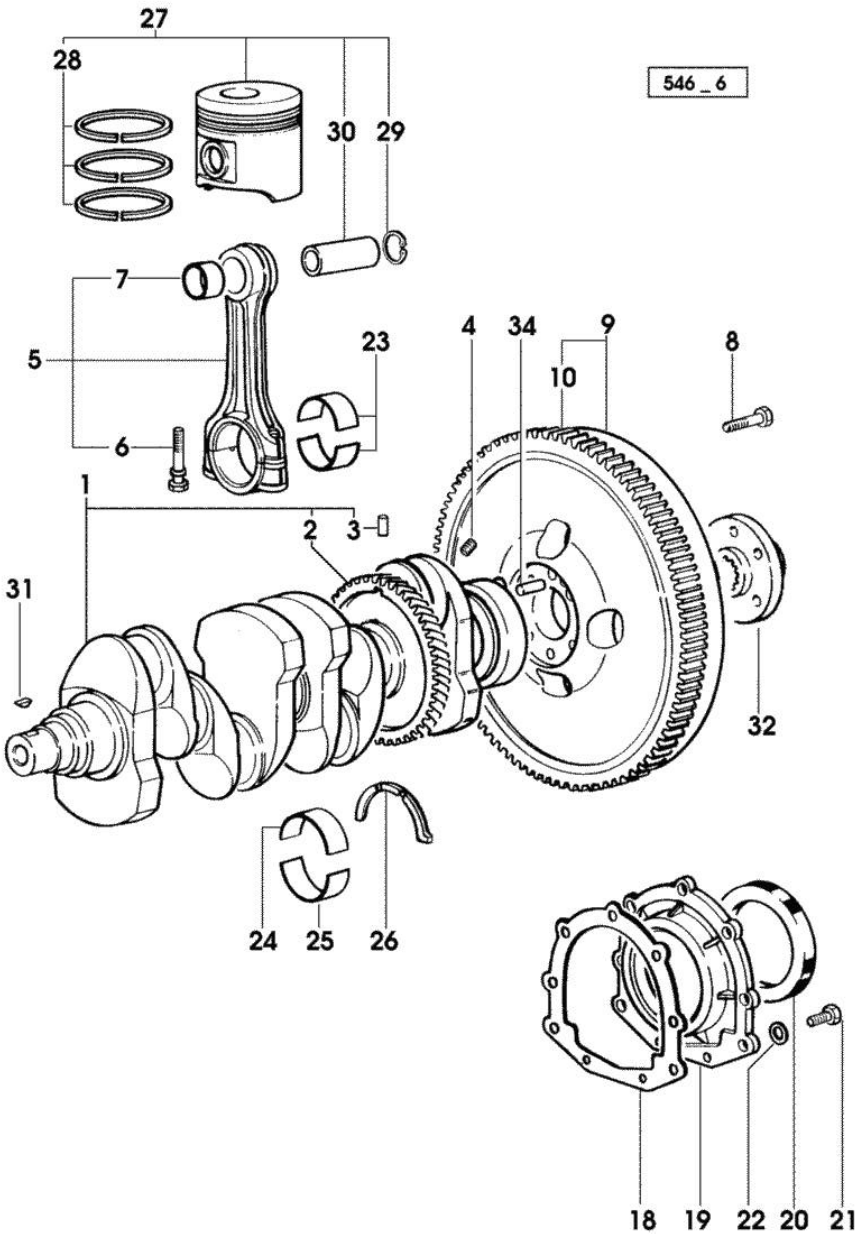


| Fig. | P/n | QTY | Name |
|---|---|---|---|
| 26 | 0.065.1218.7 | | shim + mm 0.10 |
| 26 | 0.065.1218.8 | | shim + mm 0.15 |
| 27 | 0.086.0060.6/30 | 4 | complete piston<br>- X 774-80 |
| 27 | 0.087.0060.6/30 | 4 | complete piston<br>- X 874-90T |
| 27 | 0.379.0060.6 | 4 | complete piston<br>- X 774-80<br>- EXPORT U.S.A. |
| 27 | 0.382.0060.6 | 4 | complete piston<br>- X 874-90T<br>- EXPORT U.S.A. |
| 28 | 0.081.0090.6/10 | 4 | piston ring set<br>- X 874-90T |
| 28 | 0.086.0052.6/10 | 4 | piston ring set<br>- X 774-80 |
| 29 | 2.1411.014.1 | 8 | circlip 35 |
| 30 | 0.078.1236.0 | 4 | piston pin Ø 18 / Ø 35 / L = mm 86 |
| 31 | 2.1720.006.0 | 3 | key 4x6.5 |
| 32 | 0.008.5543.0 | 1 | flange<br>-> 21050 X 774-80<br>-> 22079 X 874-90T |
| 32 | 0.255.2525.0/10 | 1 | flange<br>21049 <- X 774-80<br>22078 <- X 874-90T |
| 34 | 2.1652.915.0 | 1 | cylindrical plug 12x35 |

Section: ENGINE Ref: 01.00.16

## ENGINE SHAFT - PULLEYS

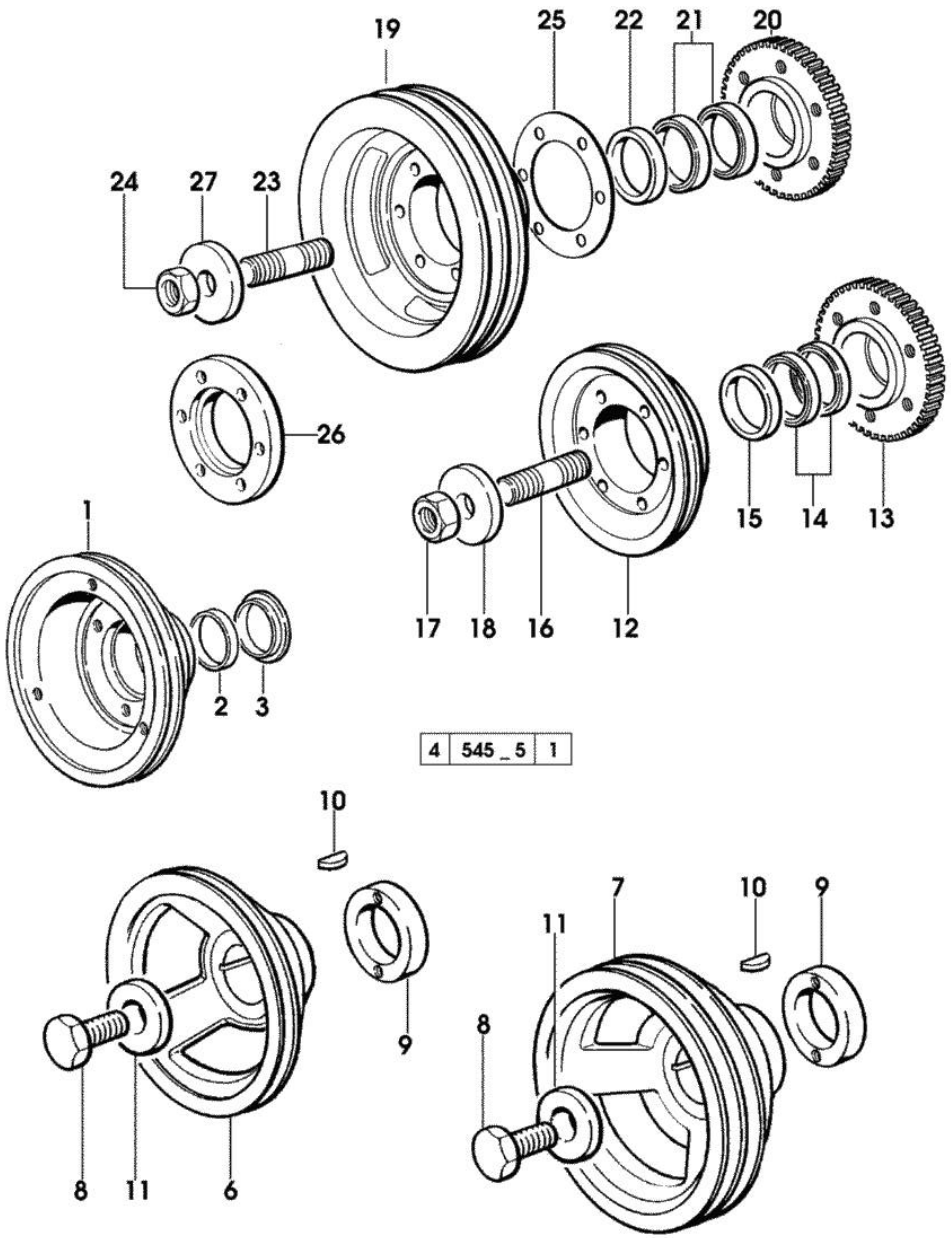


| Fig. | P/n | QTY | Name |
|---|---|---|---|
| | | | **Notes:** |
| | | | [874-90T GRAND PRIX] |
| 1 | 0.089.1251.0/10 | 1 | pulley |
| | | | (...) <- |
| 1 | 0.089.1252.0/10 | 1 | pulley |
| | | | (...) <- |
| | | | - FOR TRACTORS WITH AIR CONDITIONING |
| 2 | 0.085.1254.0 | 1 | ring |
| 3 | 0.065.1256.0 | 1 | ring 45x52 |
| 6 | 0.007.1457.0/20 | 1 | pulley |
| 7 | 0.007.1458.0/30 | 1 | pulley |
| | | | - FOR TRACTORS WITH AIR CONDITIONING |
| 8 | 2.0399.144.7/10 | 1 | screw m 20 p.1.5x51 |
| | | | * (...) <- |
| | | | - N.1 - 2.1599.524.7 |
| 9 | 0.085.1248.0/10 | 1 | hub |
| 10 | 2.1720.006.0 | 1 | key 4x6.5 |
| 11 | 2.1599.524.7 | 1 | washer 21x60x12 |
| | | | * (...) <- |
| | | | - N.1 - 2.0399.144.7 |
| 12 | 0.082.1244.0/10 | 1 | pulley |
| | | | -> (...) |
| 13 | 0.011.3515.0/10 | 1 | hub Z = 48 |
| 14 | 0.065.1256.0 | 2 | ring 45x52 |
| 15 | 2.1579.865.0 | 4 | spacer 45.2x51.8x10 |
| 16 | 2.0439.195.7 | 1 | stud bolt m 20 p.1.5x80 |
| 17 | 2.1019.094.7 | 1 | nut m 20 p.1.5 |
| 18 | 2.1599.524.7 | 1 | washer 21x60x12 |
| 19 | 0.082.1250.0/10 | 1 | pulley |
| | | | -> (...) |
| | | | - FOR TRACTORS WITH AIR CONDITIONING |
| 20 | 0.011.3515.0/10 | 1 | hub Z = 48 |
| 21 | 0.065.1256.0 | 2 | ring 45x52 |
| 22 | 2.1579.865.0 | 1 | spacer 45.2x51.8x10 |
| 23 | 2.0439.195.7 | 1 | stud bolt m 20 p.1.5x80 |
| 24 | 2.1019.094.7 | 1 | nut m 20 p.1.5 |
| 25 | 2.1589.137.0 | 3 | shoulder ring 71x110x1 |
| 26 | 0.089.1253.0/10 | 1 | spacer |
| 27 | 2.1599.524.7 | 1 | washer 21x60x12 |

Buy Now

Our support email:

ebooklibonline@outlook.com