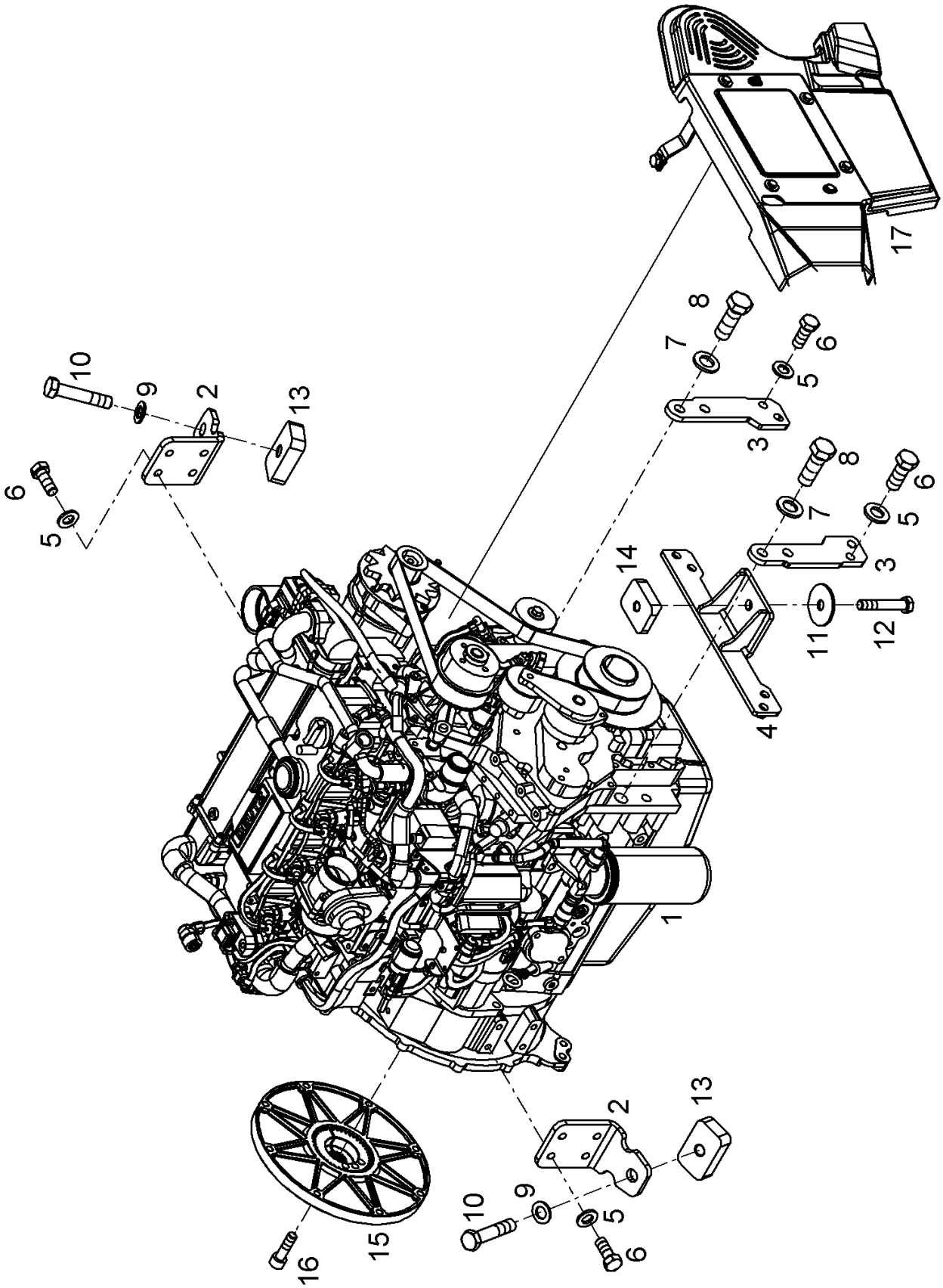
17
8
7
6
5
3
10
9
2
13
6
5
8
7
6
5
3
14
11
12
4
1
2
13
10
9
5
6
16
15

010 COMPLETE ENGINE 1)

Pos.	Part No.	Description	Dimension	Quantity	Conditions
1	**00 1920 175 0**	DIESEL ENGINE	TCD 3.6 100KW T4F DOC	1	
2	**00 1920 318 0**	SUPPORTING PLATE	MOTOR	2	
3	**00 1920 760 0**	LAGERFUSS	ENGINE	2	
4	**00 1920 287 0**	BEARING PLATE	MOTOR	1	
5	**00 0213 801 0**	FLAT WASHER	12-13X24X2,5	12	
6	**00 0233 456 0**	HEXAGON HEAD BOLT	M12X30	12	
7	**00 0250 059 0**	FLAT WASHER	16 -17X30X3	4	
8	**00 0238 662 1**	HEXAGON HEAD BOLT	M16X45	4	
9	**00 0214 560 0**	WASHER	20 - 21X37X3	2	
10	**77 0300 168 1**	HEXAGON HEAD BOLT	M20X100	2	
11	**00 1920 401 0**	WASHER	17X69X4	1	
12	**00 0214 244 0**	HEXAGON HEAD BOLT	M16X90	1	
13	**00 1920 102 0**	THREADED PLATE	MOTORKONSOLE	2	
14	**00 1920 343 0**	THREADED PLATE	ENGINE	1	
15	**00 1920 761 0**	CLUTCH	DIESELMOTOR PF 3	1	
16	**00 1992 839 1**	hexagon socket head cap screw	M10X35 ERS.D.1994520.0	8	
17	**ERS08**	ORDER SINGLE PARTS		1	

1)	**machine no.**	+ 0 + K3500021 + K3500022 + K3500024 + K3500025 + K3500026 + K3500027 + K3500028 + K3500029 + K3500030

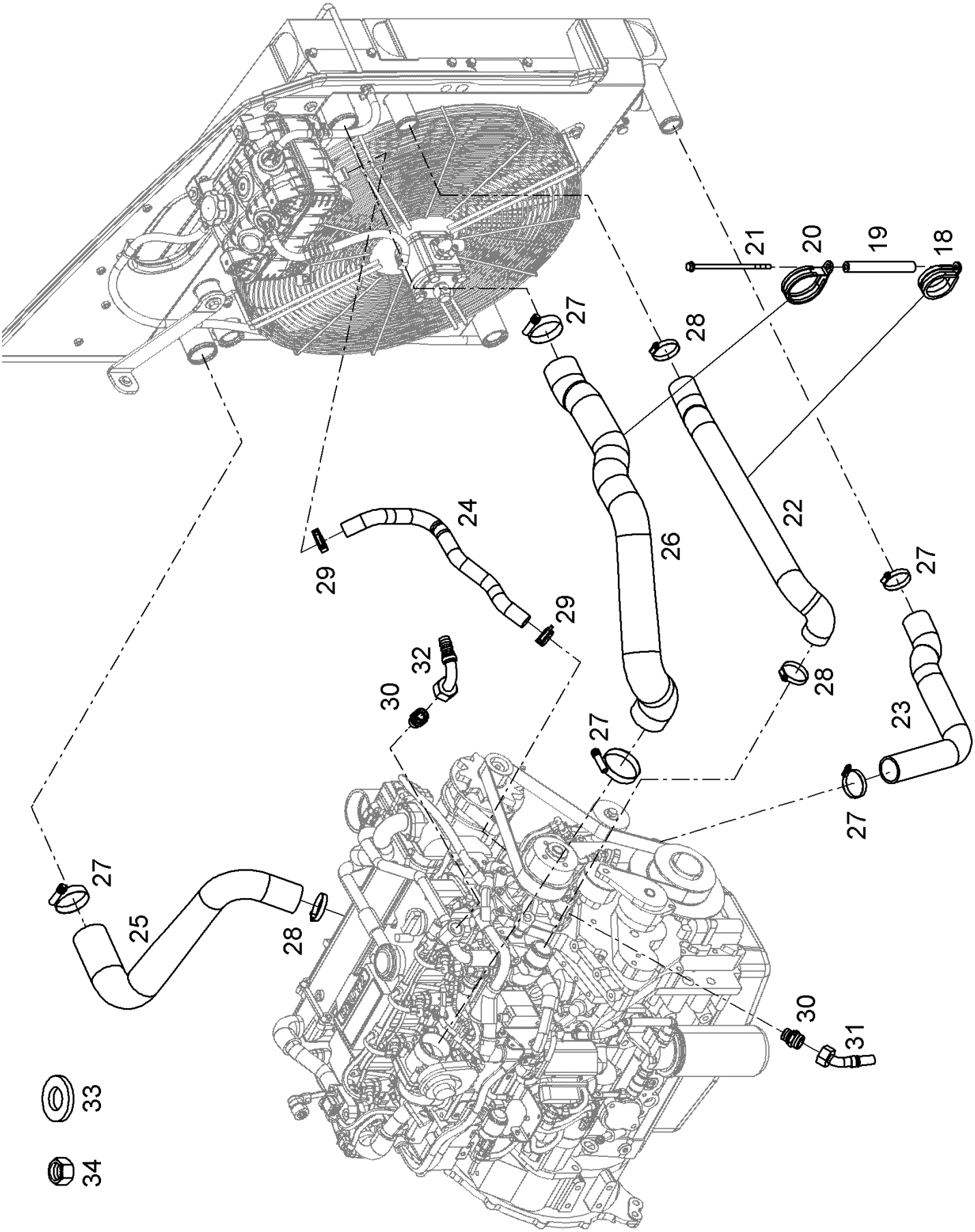
21
20
19
18
27
28
24
29
29
26
22
27
32
30
28
23
27
27
27
25
28
30
31
33
34

010 COMPLETE ENGINE 1)

Pos.	Part No.	Description	Dimension	Quantity	Conditions
18	**00 0224 070 0**	HOLDER CLAMP	D1-50X20	1	
19	**00 1920 643 0**	SPACER TUBE	9X19X150	1	
20	**00 0224 083 0**	HOLDER CLAMP	D1-67X20	1	
21	**00 0224 118 0**	6KT-SCHRAUBE M FL	M8X175	1	
22	**00 1920 113 0**	KUEHLWASSERSCHLAUCH	50 X 4	1	
23	**00 1920 114 0**	KUEHLWASSERSCHLAUCH	50 X 4	1	
24	**00 1920 115 0**	KUEHLWASSERSCHLAUCH		1	
25	**00 1920 150 0**	CHARGE AIR HOSE	D. 55	1	
26	**00 1920 151 0**	CHARGE AIR HOSE	D. 61	1	
27	**00 0224 097 0**	SCHELLE MIT TE-FED	40-60X14,3	5	
28	**00 0224 096 0**	SCHELLE MIT TE-FED	50-70X14,3	3	
29	**00 1995 050 0**	SPRING BAND CLAMP	A-30X12	2	
30	**00 1111 841 0**	STRAIGHT SCREW-IN UNION	SDS-L18XM22X1, 5-TYPE E	2	
31	**00 1921 559 0**	HOSE FITTING	SWE45 18X16(M26X1, 5)45 2	1	
32	**00 1301 465 0**	HOSE FITTING		1	
33	**00 1921 453 0**	WASHER	21X70X5	2	
34	**00 0224 398 0**	HEX. NUT WITH CLAMP. PART	M20	2	

1)	**machine no.**	+ 0 + K3500021 + K3500022 + K3500024 + K3500025 + K3500026 + K3500027 + K3500028 + K3500029 + K3500030

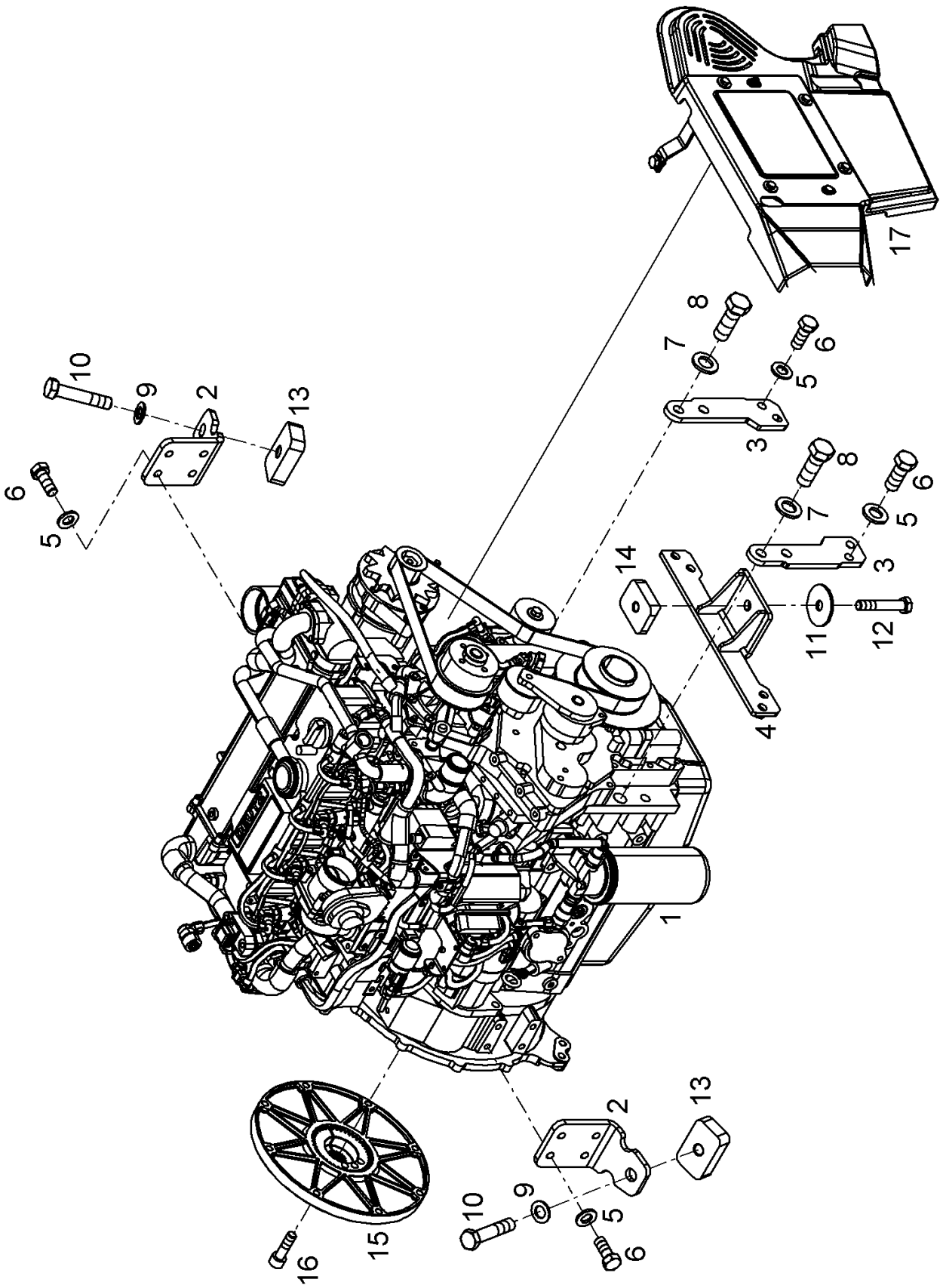
17
8
7
6
5
3
10
9
2
13
6
5
8
7
6
5
3
14
11
12
4
1
2
13
10
9
5
6
16
15

010 COMPLETE ENGINE 1)

Pos.	Part No.	Description	Dimension	Quantity	Conditions
1	**00 1920 174 0**	DIESEL ENGINE	TCD 3.6 100KW T4F DOC+DP	1	
2	**00 1920 318 0**	SUPPORTING PLATE	MOTOR	2	
3	**00 1920 760 0**	LAGERFUSS	ENGINE	2	
4	**00 1920 287 0**	BEARING PLATE	MOTOR	1	
5	**00 0213 801 0**	FLAT WASHER	12-13X24X2,5	12	
6	**00 0233 456 0**	HEXAGON HEAD BOLT	M12X30	12	
7	**00 0250 059 0**	FLAT WASHER	16 -17X30X3	4	
8	**00 0238 662 1**	HEXAGON HEAD BOLT	M16X45	4	
9	**00 0214 560 0**	WASHER	20 - 21X37X3	2	
10	**77 0300 168 1**	HEXAGON HEAD BOLT	M20X100	2	
11	**00 1920 401 0**	WASHER	17X69X4	1	
12	**00 0214 244 0**	HEXAGON HEAD BOLT	M16X90	1	
13	**00 1920 102 0**	THREADED PLATE	MOTORKONSOLE	2	
14	**00 1920 343 0**	THREADED PLATE	ENGINE	1	
15	**00 1920 761 0**	CLUTCH	DIESELMOTOR PF 3	1	
16	**00 1992 839 1**	hexagon socket head cap screw	M10X35 ERS.D.1994520.0	8	
17	**ERS08**	ORDER SINGLE PARTS		1	

1) machine no. + 0
PRE ASSEMBLY ENGINE

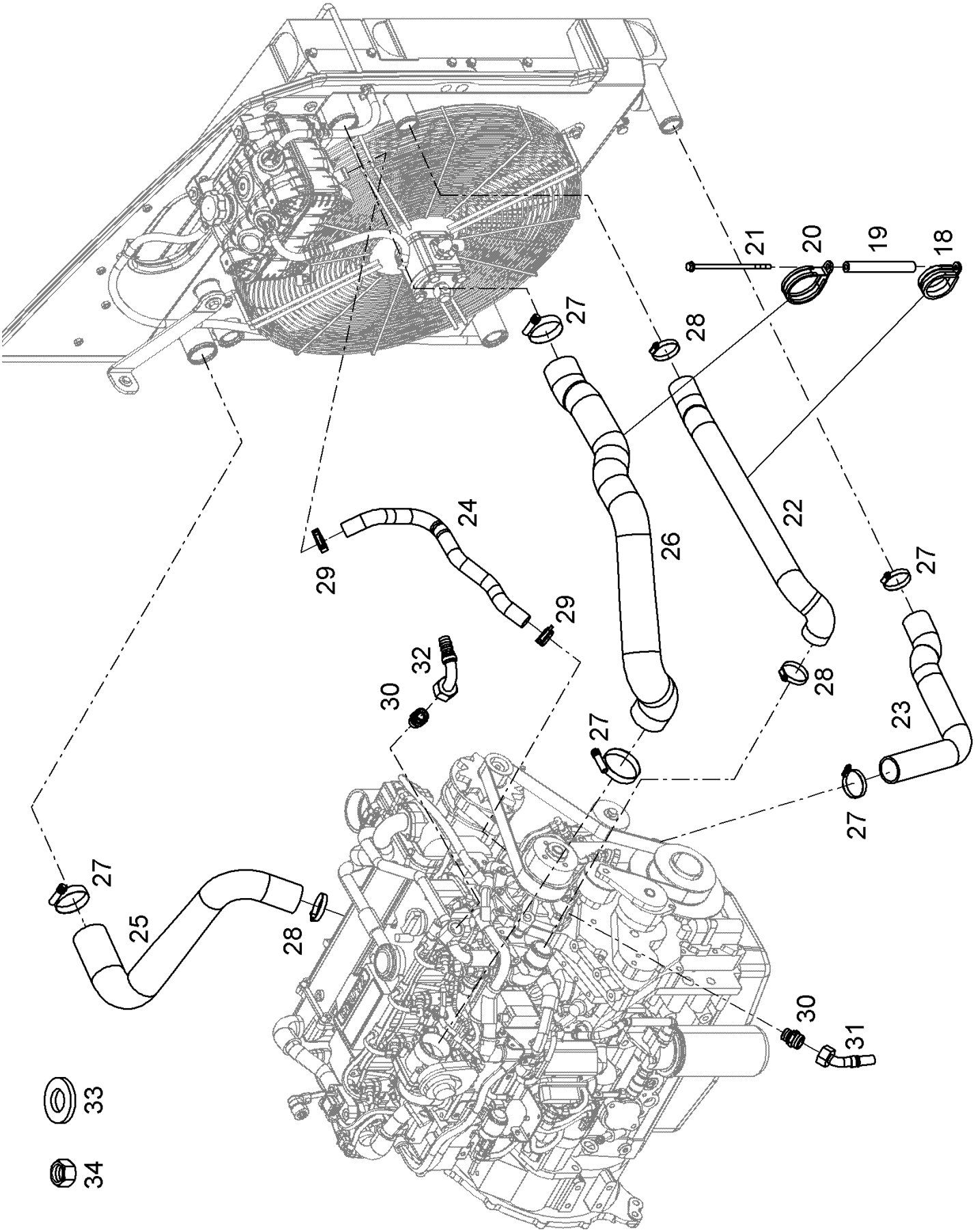
18
19
20
21
22
23
24
25
26
27
28
29
30
31
32
33
34

010 COMPLETE ENGINE 1)

Pos.	Part No.	Description	Dimension	Quantity	Conditions
18	**00 0224 070 0**	HOLDER CLAMP	D1-50X20	1	
19	**00 1920 643 0**	SPACER TUBE	9X19X150	1	
20	**00 0224 083 0**	HOLDER CLAMP	D1-67X20	1	
21	**00 0224 118 0**	6KT-SCHRAUBE M FL	M8X175	1	
22	**00 1920 113 0**	KUEHLWASSERSCHLAUCH	50 X 4	1	
23	**00 1920 114 0**	KUEHLWASSERSCHLAUCH	50 X 4	1	
24	**00 1920 115 0**	KUEHLWASSERSCHLAUCH		1	
25	**00 1920 150 0**	CHARGE AIR HOSE	D. 55	1	
26	**00 1920 151 0**	CHARGE AIR HOSE	D. 61	1	
27	**00 0224 097 0**	SCHELLE MIT TE-FED	40-60X14,3	5	
28	**00 0224 096 0**	SCHELLE MIT TE-FED	50-70X14,3	3	
29	**00 1995 050 0**	SPRING BAND CLAMP	A-30X12	2	
30	**00 1111 841 0**	STRAIGHT SCREW-IN UNION	SDS-L18XM22X1, 5-TYPE E	2	
31	**00 1921 559 0**	HOSE FITTING	SWE45 18X16(M26X1, 5)45 2	1	
32	**00 1301 465 0**	HOSE FITTING		1	
33	**00 1921 453 0**	WASHER	21X70X5	2	
34	**00 0224 398 0**	HEX. NUT WITH CLAMP. PART	M20	2	

1) machine no. + 0
PRE ASSEMBLY ENGINE

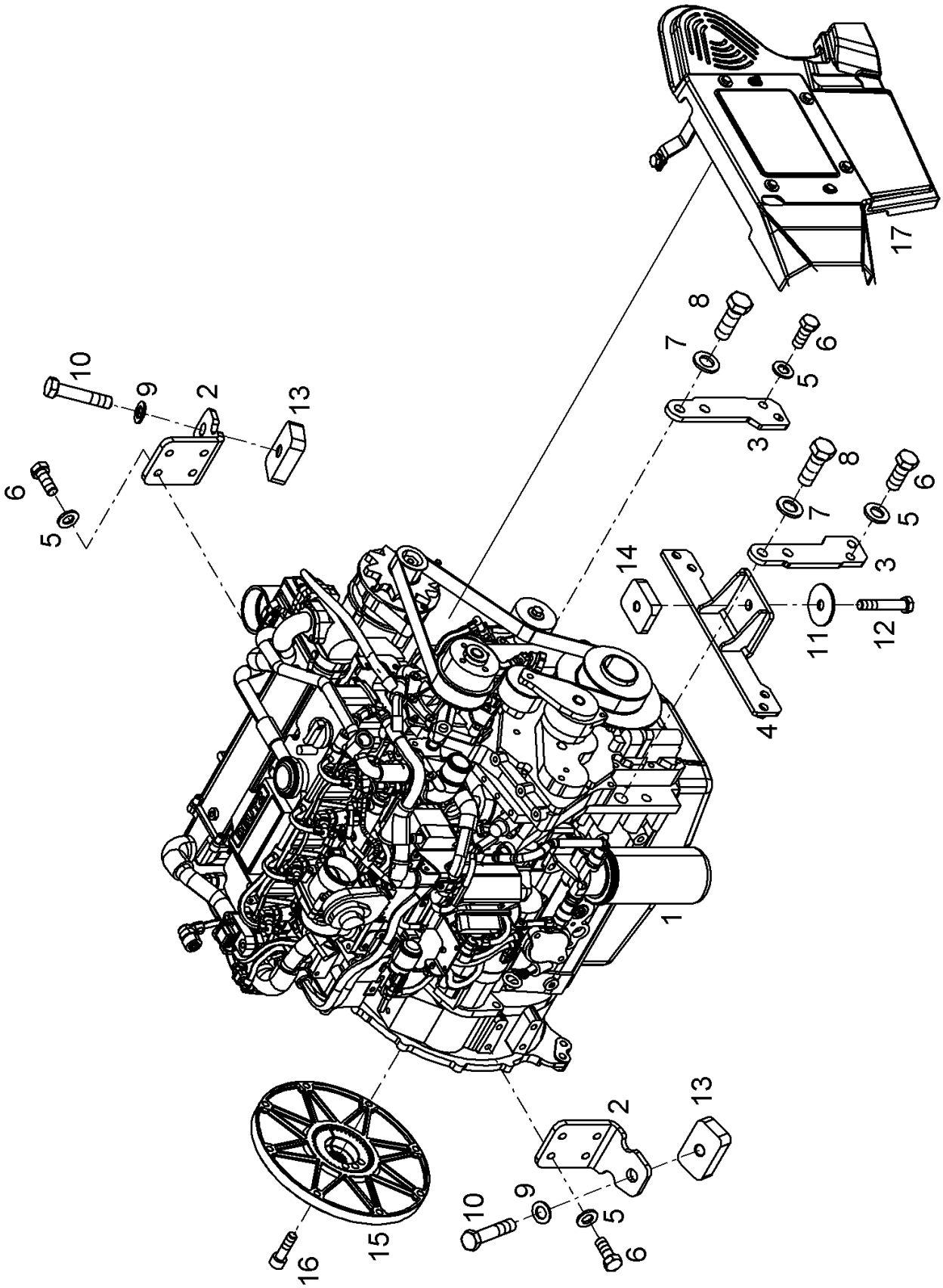
17
8
7
6
5
3
10
9
2
13
6
5
8
7
6
5
3
14
11
12
4
1
2
13
10
9
5
6
16
15

010 COMPLETE ENGINE 1)

Pos.	Part No.	Description	Dimension	Quantity	Conditions
1	**00 1921 157 0**	DIESEL ENGINE	TCD 3.6 100KW TIER3A	1	
2	**00 1920 318 0**	SUPPORTING PLATE	MOTOR	2	
3	**00 1920 760 0**	LAGERFUSS	ENGINE	2	
4	**00 1920 287 0**	BEARING PLATE	MOTOR	1	
5	**00 0213 801 0**	FLAT WASHER	12-13X24X2,5	12	
6	**00 0233 456 0**	HEXAGON HEAD BOLT	M12X30	12	
7	**00 0250 059 0**	FLAT WASHER	16 -17X30X3	4	
8	**00 0238 662 1**	HEXAGON HEAD BOLT	M16X45	4	
9	**00 0214 560 0**	WASHER	20 - 21X37X3	2	
10	**77 0300 168 1**	HEXAGON HEAD BOLT	M20X100	2	
11	**00 1920 401 0**	WASHER	17X69X4	1	
12	**00 0214 244 0**	HEXAGON HEAD BOLT	M16X90	1	
13	**00 1920 102 0**	THREADED PLATE	MOTORKONSOLE	2	
14	**00 1920 343 0**	THREADED PLATE	ENGINE	1	
15	**00 1920 761 0**	CLUTCH	DIESELMOTOR PF 3	1	
16	**00 1992 839 1**	hexagon socket head cap screw	M10X35	8	
17	**ERS08**	ORDER SINGLE PARTS	ERS.D.1994520.0	1	

1) machine no.

+ 0
+ K3500072
+ K3500073
+ K3500076
+ K3500088
+ K3500150
+ K3500151
+ K3500152
+ K3500614
+ K3500623

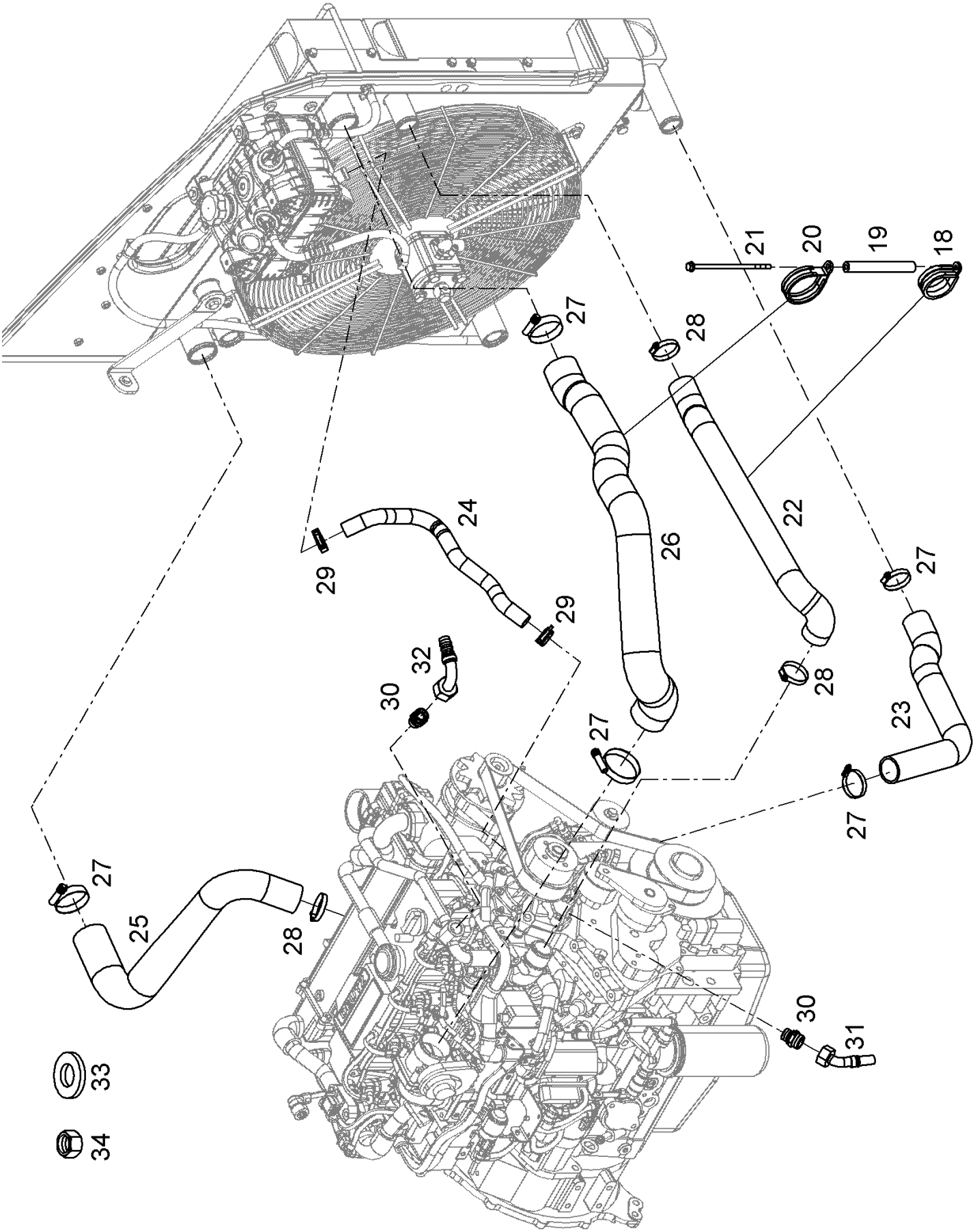
21
20
19
18
27
28
24
29
29
26
22
27
32
30
28
23
27
27
27
25
28
30
31
33
34

010 COMPLETE ENGINE 1)

Pos.	Part No.	Description	Dimension	Quantity	Conditions
18	**00 0224 070 0**	HOLDER CLAMP	D1-50X20	1	
19	**00 1920 643 0**	SPACER TUBE	9X19X150	1	
20	**00 0224 083 0**	HOLDER CLAMP	D1-67X20	1	
21	**00 0224 118 0**	6KT-SCHRAUBE M FL	M8X175	1	
22	**00 1920 113 0**	KUEHLWASSERSCHLAUCH	50 X 4	1	
23	**00 1920 114 0**	KUEHLWASSERSCHLAUCH	50 X 4	1	
24	**00 1920 115 0**	KUEHLWASSERSCHLAUCH		1	
25	**00 1920 150 0**	CHARGE AIR HOSE	D. 55	1	
26	**00 1920 151 0**	CHARGE AIR HOSE	D. 61	1	
27	**00 0224 097 0**	SCHELLE MIT TE-FED	40-60X14,3	5	
28	**00 0224 096 0**	SCHELLE MIT TE-FED	50-70X14,3	3	
29	**00 1995 050 0**	SPRING BAND CLAMP	A-30X12	2	
30	**00 1111 841 0**	STRAIGHT SCREW-IN UNION	SDS-L18XM22X1, 5-TYPE E	2	
31	**00 1921 559 0**	HOSE FITTING	SWE45 18X16(M26X1, 5)45 2	1	
32	**00 1301 465 0**	HOSE FITTING		1	
33	**00 1921 453 0**	WASHER	21X70X5	2	
34	**00 0224 398 0**	HEX. NUT WITH CLAMP. PART	M20	2	

1)	**machine no.**	+ 0 + K3500072 + K3500073 + K3500076 + K3500088 + K3500150 + K3500151 + K3500152 + K3500614 + K3500623

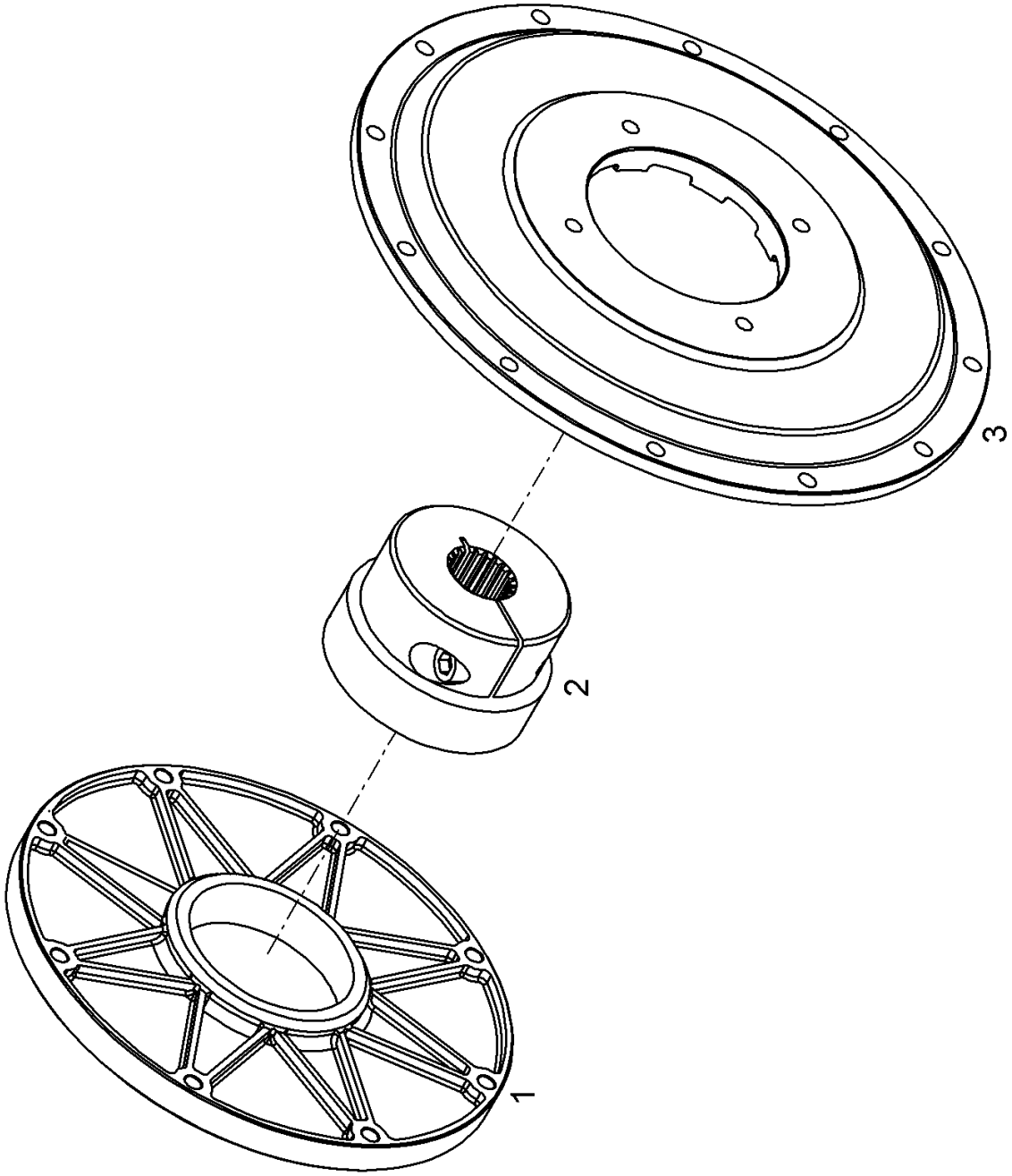
1
2
3

010 COMPLETE ENGINE 1)

Pos.	Part No.	Description	Dimension	Quantity	Conditions
1	**00 1921 186 0**	FLANGE		1	
2	**00 1922 073 0**	CLAMPING HUB		1	
3	**00 1922 074 0**	FLANGE		1	

1) machine no.

+ 0
+ K3500021
+ K3500022
+ K3500024
+ K3500025
+ K3500026
+ K3500027
+ K3500028
+ K3500029
+ K3500030

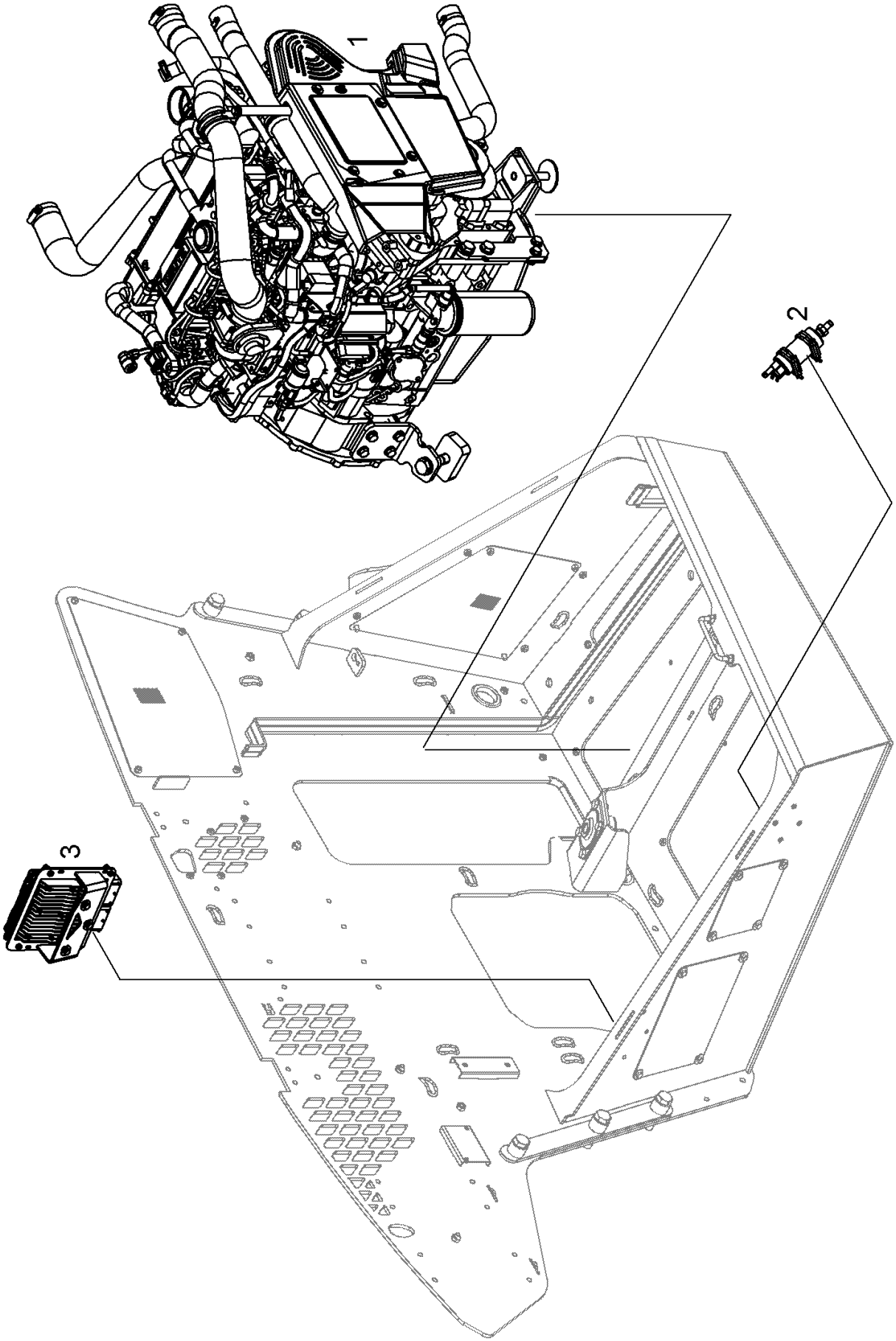
1
2
3

Thank you so much for reading.

Please click the “Buy Now!” button below to download the complete manual.

Buy Now

After you pay.

You can download the most perfect and complete manual in the world immediately.

Our support email:

ebooklibonline@outlook.com