CRANKCASE

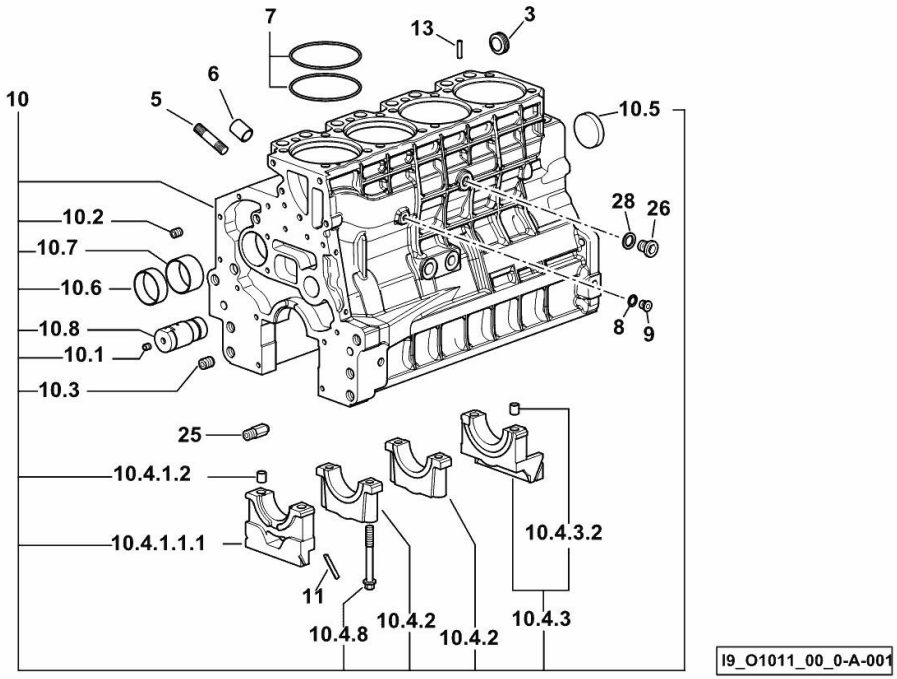

Fig.	P/n	QTY	Name

Notes:
[AGROLUX 80 PROFILINE 2WD -> ZKDV9901W0RD01001M11] 1006 <- [AGROLUX 80 PROFILINE 4WD -> ZKDV9902W0RD01001M11] 1006 <-

3	2.3199.312.2/20	1	plug m 35x1.5x9.5
5	2.0439.279.7	8	stud bolt m 8 p.1 x 25
6	2.1559.188.2	4	bush 11.4 x 14 x16
7	2.1539.259.0	8	special oil seal 107.62x2.62
8	2.1560.010.0	1	gasket 14.2 x 20
9	2.3199.292.0	1	plug 1/4" gas
10	0.014.9655.4/30	1	crankcase
10.1	2.3130.001.1	14	plug 1/8" gas
10.2	2.3130.002.1	4	plug 1/4" gas
10.3	2.3130.003.1	6	plug 3/8" gas
10.4.1.1.1	0.065.1112.7/10	1	support
10.4.1.2	2.1699.165.0	1	bush 12.3x15x16
10.4.2	0.065.1114.0/10	3	support
10.4.3	0.065.1116.3	1	support
10.4.3.2	2.1699.165.0	1	bush 12.3x15x16
10.4.8	0.065.1117.0	10	screw m 12 x 100
10.5	2.3179.012.0	1	plug 60
10.6	0.065.1140.0	4	special bushing 59X55X20
10.7	0.065.1141.0	1	special bushing 59X55X30
10.8	0.014.1340.0/10	1	pin mm 85
11	0.066.1152.0/10	4	gasket
13	2.1549.154.2	4	bush 4.8x5.8x16
25	0.013.4946.0/10	1	sprayer nozzle
26	2.3120.101.0	1	plug m 18 p.1.5
28	2.1560.014.0	1	washer 18.2 x 24

CRANKCASE

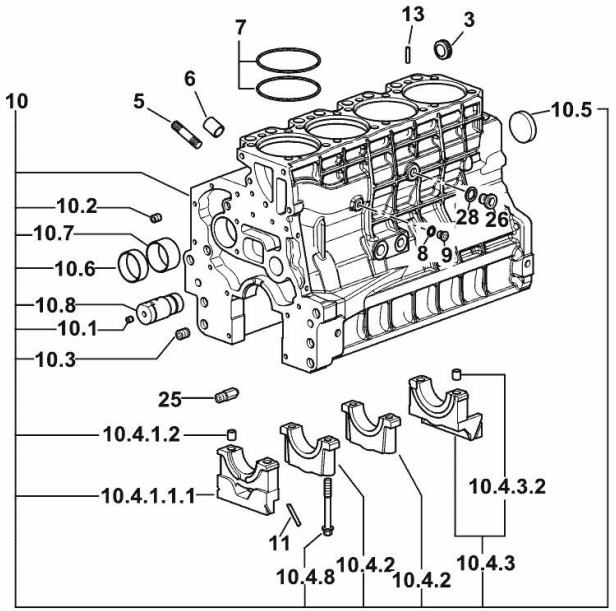

I9_Q5011_00_0-A-001

Fig.	P/n	QTY	Name

Notes:
[AGROLUX 80 PROFILINE 2WD -> ZKDV9901W0RD01001M11] -> 1004 [AGROLUX 80 PROFILINE 4WD -> ZKDV9902W0RD01001M11] -> 1004

3	2.3199.312.2/20	1	plug m 35x1.5x9.5
5	2.0439.279.7	8	stud bolt m 8 p.1 x 25
6	2.1559.188.2	4	bush 11.4 x 14 x16
7	2.1539.259.0	8	special oil seal 107.62x2.62
8	2.1560.010.0	1	gasket 14.2 x 20
9	2.3199.292.0	1	plug 1/4" gas
10	0.014.9655.4/30	1	crankcase
10.1	2.3130.001.1	14	plug 1/8" gas
10.2	2.3130.002.1	4	plug 1/4" gas
10.3	2.3130.003.1	6	plug 3/8" gas
10.4.1.1.1	0.065.1112.7/10	1	support
10.4.1.2	2.1699.165.0	1	bush 12.3x15x16
10.4.2	0.065.1114.0/10	3	support
10.4.3	0.065.1116.3	1	support
10.4.3.2	2.1699.165.0	1	bush 12.3x15x16
10.4.8	0.065.1117.0	10	screw m 12 x 100
10.5	2.3179.012.0	1	plug 60
10.6	0.065.1140.0	4	special bushing 59X55X20
10.7	0.065.1141.0	1	special bushing 59X55X30
10.8	0.014.1340.0/10	1	pin mm 85
11	0.066.1152.0/10	4	gasket
13	2.1549.154.2	4	bush 4.8x5.8x16
25	0.013.4946.0/10	1	sprayer nozzle
26	2.3120.101.0	1	plug m 18 p.1.5
28	2.1560.014.0	1	washer 18.2 x 24

MONOBLOC ENGINE-GEARBOX CONNECTING FLANGE

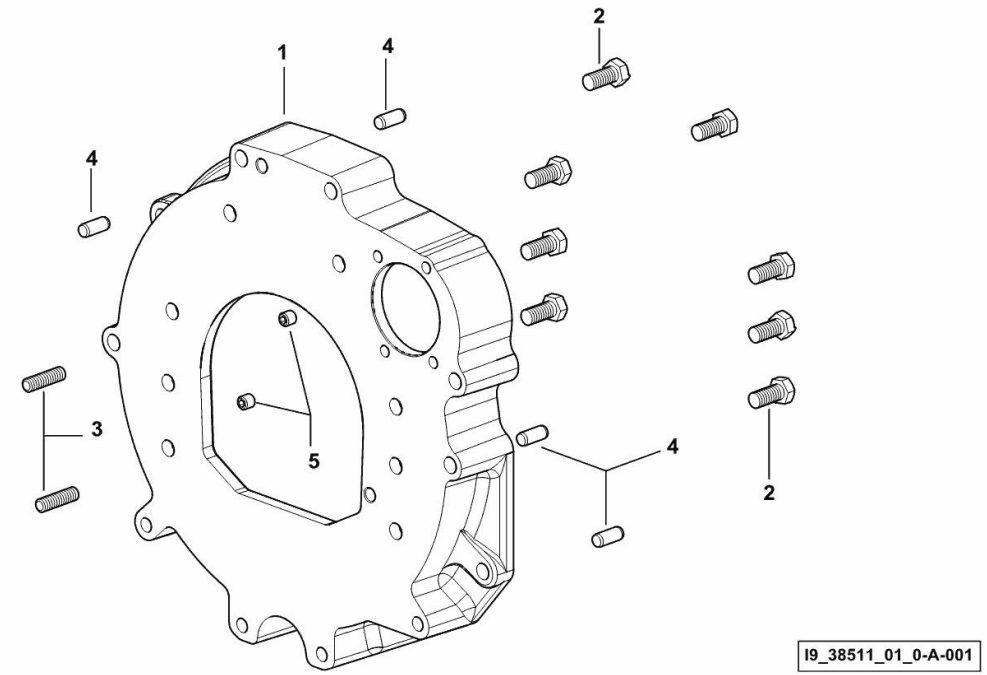

Fig.	P/n	QTY	Name

Notes:
[AGROLUX 80 PROFILINE 2WD -> ZKDV9901W0RD01001M11] [AGROLUX 80 PROFILINE 4WD -> ZKDV9902W0RD01001M11]

1	0.015.8814.0	1	flange
2	2.0112.511.2	8	screw m 14 p.2 x 30
3	2.0432.255.7	2	stud bolt m 12 p.1.75-1.25x25
4	2.1651.912.0	4	cylindrical plug 12x28
5	2.0512.404.7	2	screw

SIDE PLUG FOR CYLINDER BLOCK

Fig.	P/n	QTY	Name

Notes:
[AGROLUX 80 PROFILINE 2WD -> ZKDV9901W0RD01001M11] [AGROLUX 80 PROFILINE 4WD -> ZKDV9902W0RD01001M11]

22	2.1560.017.0	1	gasket 22.2 x 27
23	2.3120.002.4	1	plug m 22 x 1.5

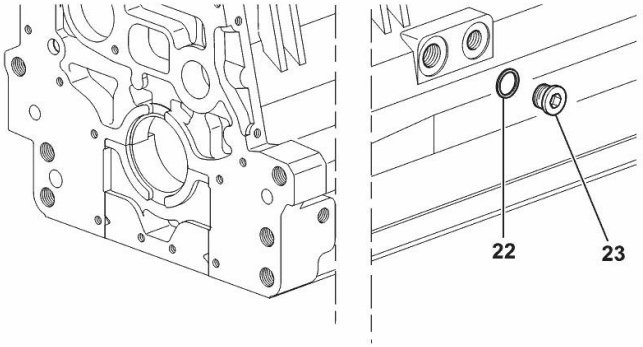

I9_33211_07_0-A-001

ENGINE OIL AND TURBO PRESSURE SWITCH UNION

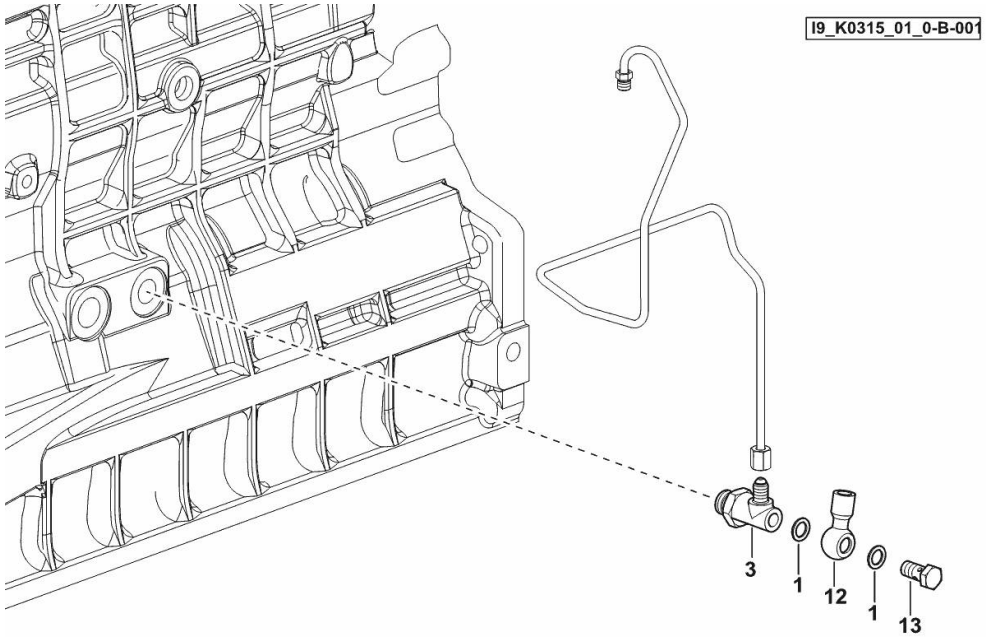

Fig.	P/n	QTY	Name

Notes:
[AGROLUX 80 PROFILINE 2WD -> ZKDV9901W0RD01001M11] 1006 <- [AGROLUX 80 PROFILINE 4WD -> ZKDV9902W0RD01001M11] 1006 <-

1	2.1560.008.0	2	gasket 12.2 x 18
3	2.3339.574.2	1	pipe fitting
12	2.3249.014.2	1	pipe fitting m 12 p.1.5
13	2.3330.003.1	1	pipe union m 12 p.1.5

ENGINE OIL AND TURBO PRESSURE SWITCH UNION

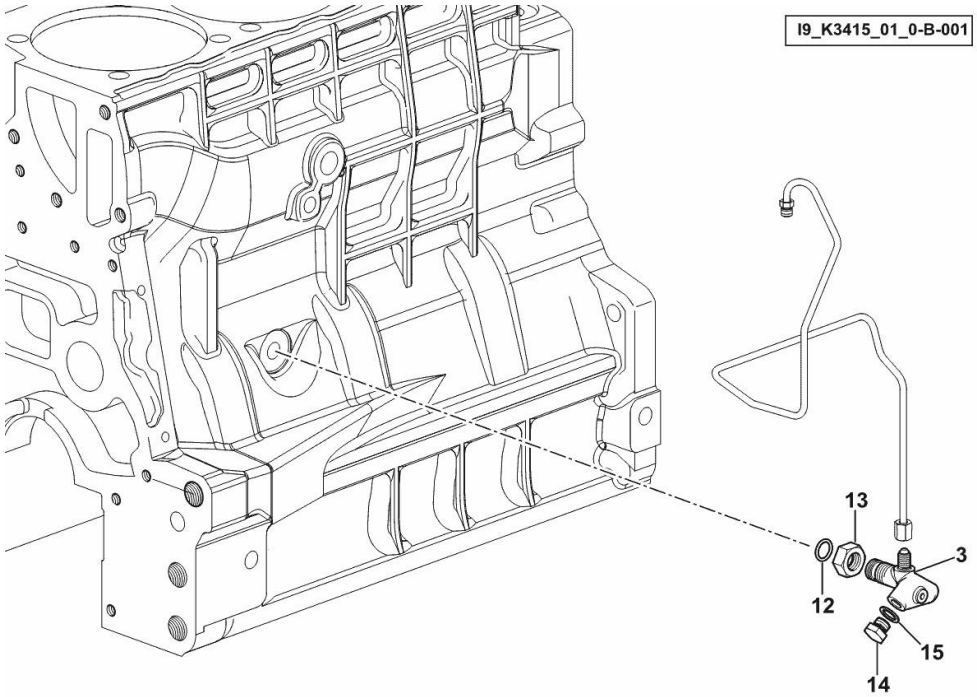

Fig.	P/n	QTY	Name

Notes:
[AGROLUX 80 PROFILINE 2WD -> ZKDV9901W0RD01001M11] -> 1004 [AGROLUX 80 PROFILINE 4WD -> ZKDV9902W0RD01001M11] -> 1004

3	2.3339.787.0/10	1	pipe fitting 7/16"
12	2.1533.038.0	1	oil seal 15.45x2.62
13	2.1019.129.2/10	1	nut m 18 p.1.5x12
14	2.3110.403.1	1	plug m 14 p.1.5x12
15	2.1560.010.0	1	gasket 14.2 x 20

LOWER PLUG FOR CYLINDER BLOCKS

Fig.	P/n	QTY	Name

Notes:
[AGROLUX 80 PROFILINE 2WD -> ZKDV9901W0RD01001M11] 1006 <- [AGROLUX 80 PROFILINE 4WD -> ZKDV9902W0RD01001M11] 1006 <-

1	2.3130.003.1	2	plug 3/8" gas

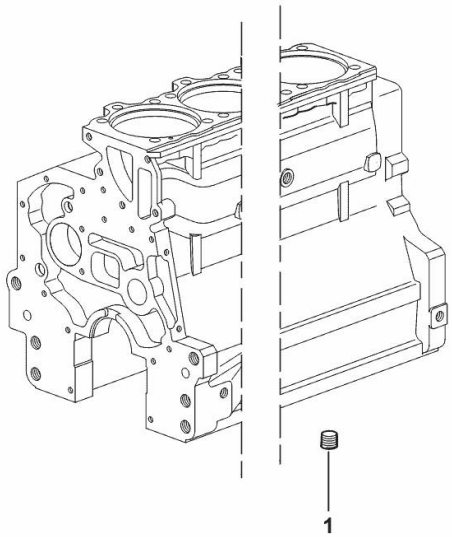

I9_37511_06_0-A-001

Buy Now

Our support email:

ebooklibonline@outlook.com