Section: ENGINE Ref: 01.00.0

CRANKCASE

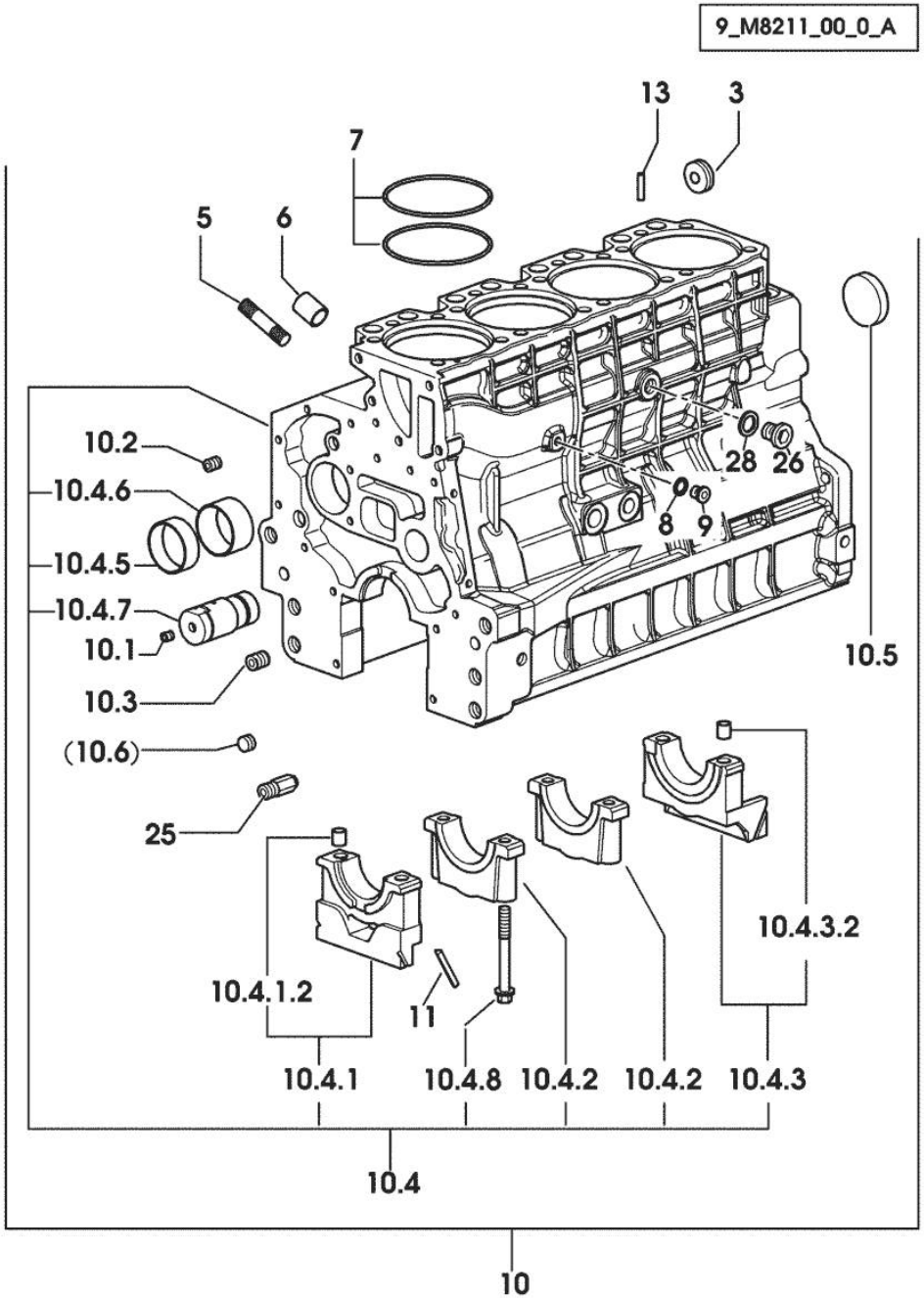

Fig.	P/n	QTY	Name

Notes:
[CF. 78L -> 2001]

3	2.3199.312.2/10	1	plug
5	2.0439.273.7	8	stud bolt m 8
6	2.1559.188.2	4	bush 11.4 x 14 x16
7	2.1539.193.0	8	special oil seal 107.62x2.62
8	2.1560.010.0	1	gasket 14.2 x 20
9	2.3199.292.0	1	plug 1/4" gas
10	0.013.0489.4/20	1	crankcase
10.1	2.3130.001.1	10	plug 1/8" gas
10.2	2.3130.002.1	2	plug 1/4" gas
10.3	2.3130.003.1	6	plug 3/8" gas
10.4	0.000.0000.1		cannot be supplied
10.4.1	0.065.1112.7	1	support
10.4.1.2	2.1699.165.0	1	bush 12.3x15x16
10.4.2	0.065.1114.0/10	3	support
10.4.3	0.065.1116.3	1	support
10.4.3.2	2.1699.165.0	1	bush 12.3x15x16
10.4.5	0.065.1140.0	4	special bushing 59X55X20
10.4.6	0.065.1141.0	1	special bushing 59X55X30
10.4.7	0.066.1151.0	1	pin
10.4.8	0.065.1117.0	10	screw m 12 x 100
10.5	2.3179.012.0	1	plug 60
11	0.066.1152.0/10	4	gasket
13	2.1549.154.2	4	bush 4.8x5.8x16
25	0.013.4946.0/10	1	sprayer nozzle
26	2.3120.101.0	1	plug m 18 p.1.5
28	2.1560.014.0	1	washer 18.2 x 24

Section: ENGINE Ref: 01.00.3

TIMING CASE

Fig.	P/n	QTY	Name

Notes:
[CF. 78L -> 2001]

4	2.0432.009.7	1	stud bolt m 8 p.1.25 / p. 1 x 35
15	2.0432.003.7	1	stud bolt m 8 p.1.25 / p.1 x 20
16	2.0312.214.2	7	screw m 8 p.1.25 x 40
17	2.1480.014.1	15	washer 8
18	0.013.4981.0	1	guard
19	0.065.1150.0/30	1	gasket
20	2.1470.004.2	4	lock washer 8
21	2.1011.405.2	2	nut m 8 p.1
22	2.0312.208.2	8	screw m 8 p.1.25 x 25
23	2.1529.167.0	1	oil seal

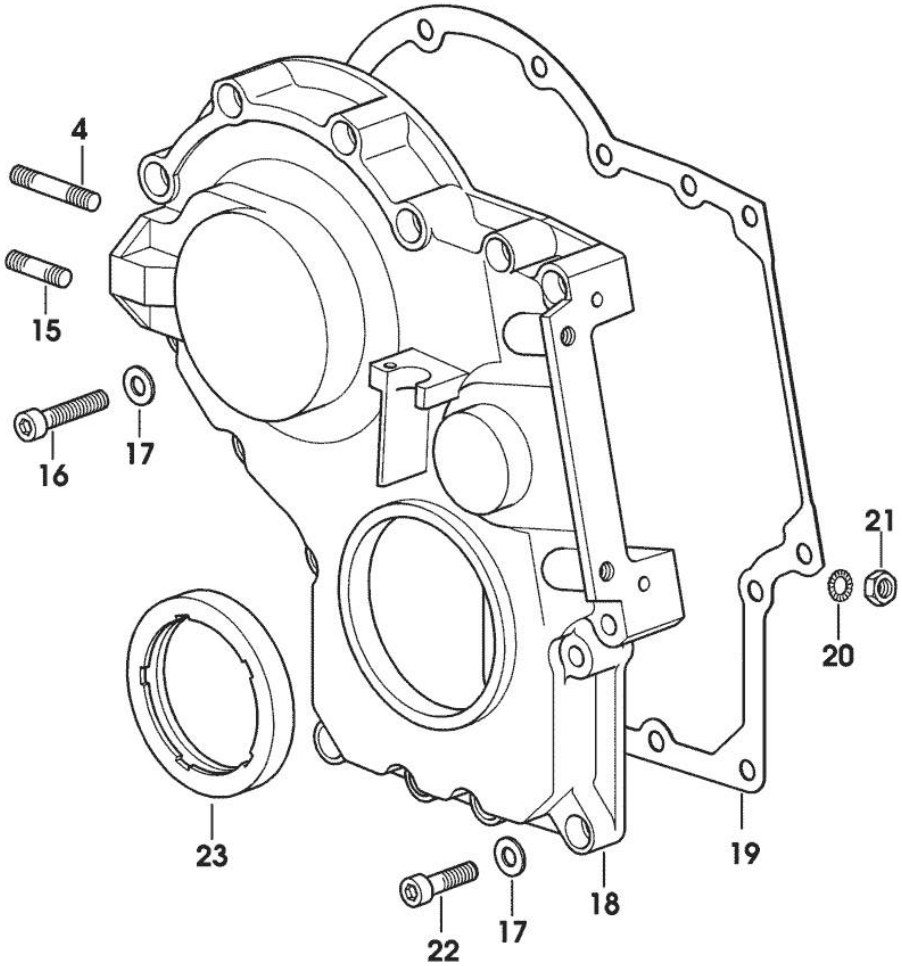

9_M8211_00_0_B

Section: ENGINE Ref: 01.00.4

GUARD PLATE

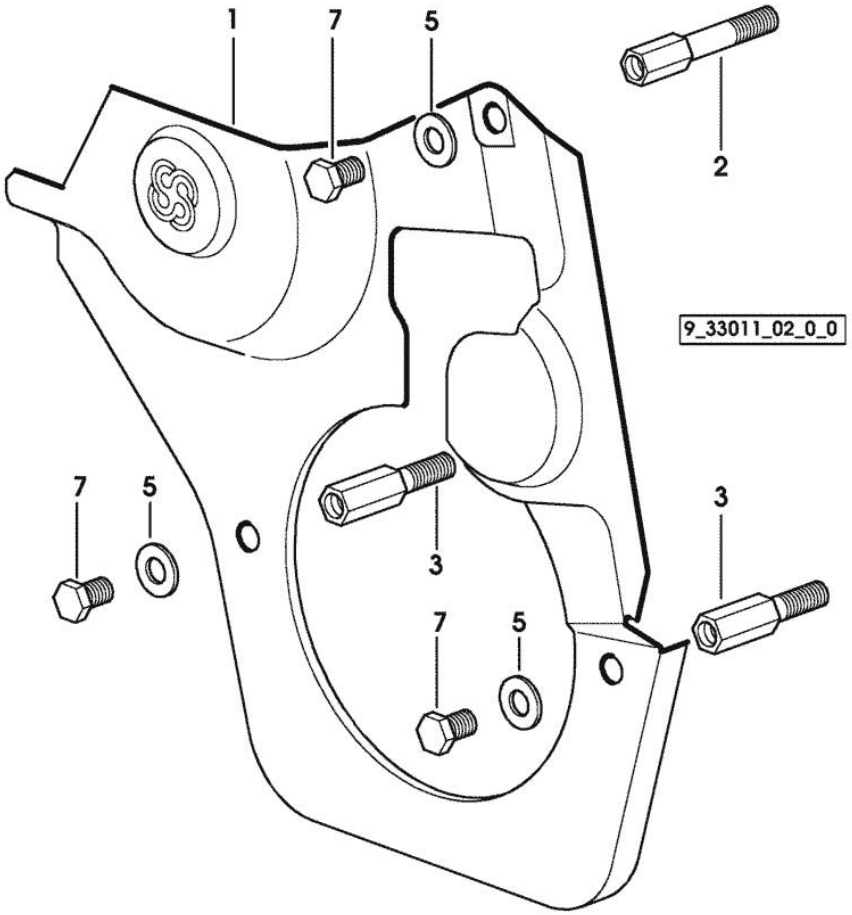

Fig.	P/n	QTY	Name

Notes:
[CF. 78L -> 2001]

1	0.007.1262.3/50	1	guard
2	0.007.1271.0/10	1	small column m 8 p.1.25 / L = mm 60
3	0.007.1272.0/10	2	small column m 8 p.1.25 / L = mm 50
5	2.1310.004.2	3	flat washer 8.4x17
7	2.0112.203.2	3	screw m 8 p.1.25 x 12

Section: ENGINE Ref: 01.00.7

PLUG

Fig.	P/n	QTY	Name

Notes:
[CF. 78L -> 2001]

1	2.3130.003.1	1	plug 3/8" gas

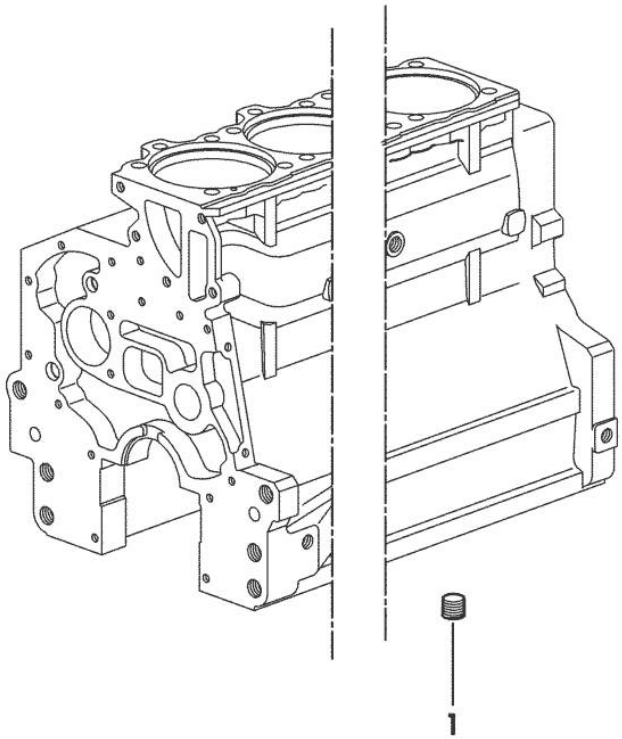

9_34311_06_0_0

Section: ENGINE Ref: 01.00.8

SIDE PLUG FOR CYLINDER BLOCK

Fig.	P/n	QTY	Name

Notes:
[CF. 78L -> 2001]

22	2.1560.017.0	1	gasket 22.2 x 27
23	2.3120.002.4	1	plug m 22 x 1.5

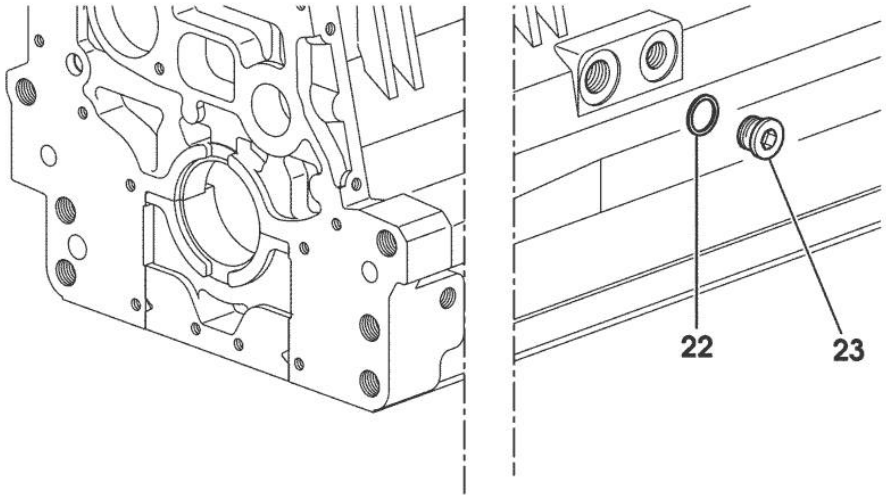

9_33211_07_0_0

Section: ENGINE Ref: 01.00.11

MONOBLOC ENGINE-GEARBOX CONNECTING FLANGE

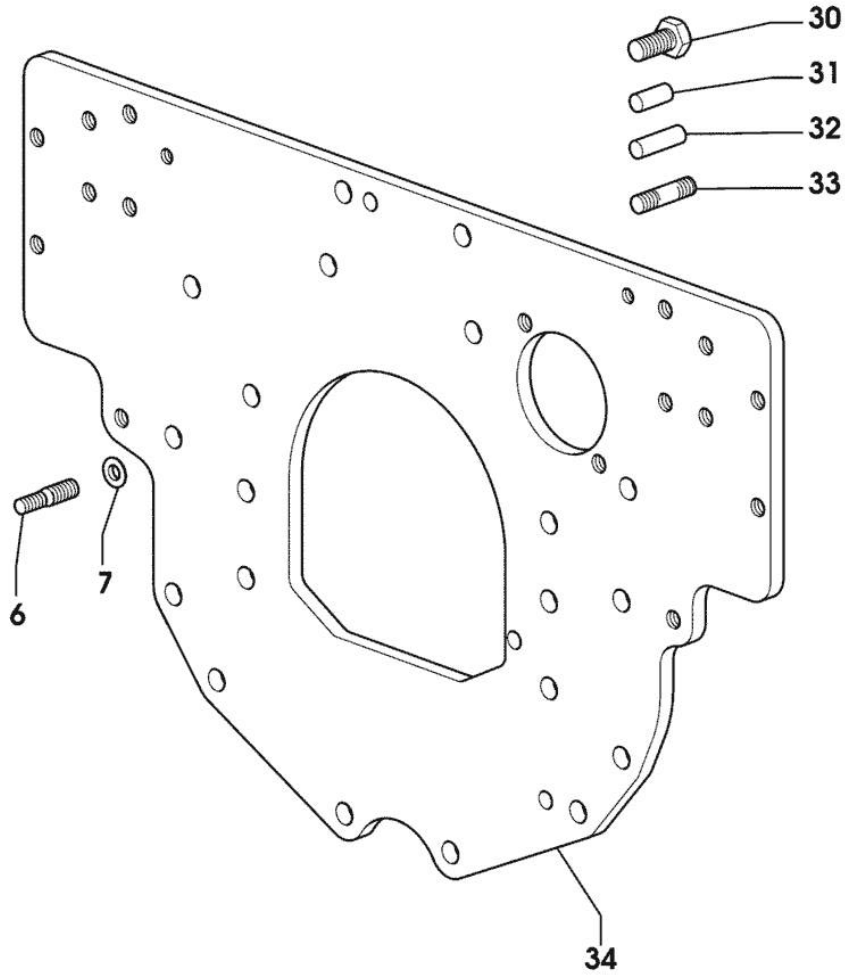

9_32311_06_0_0

Fig.	P/n	QTY	Name

Notes:
[CF. 78L -> 2001]

6	2.0439.250.7	1	stud bolt m 12 / m 10 x 30
7	0.011.9294.0/10	1	bush
30	2.0112.511.2	8	screw m 14 p.2 x 30
31	2.1651.912.0	2	cylindrical plug 12x28
32	2.1651.917.0	1	cylindrical plug 12x40
33	2.0432.257.7	1	stud bolt m 12 p.1.75 - 1.25 x 30
34	0.013.3120.0	1	flange

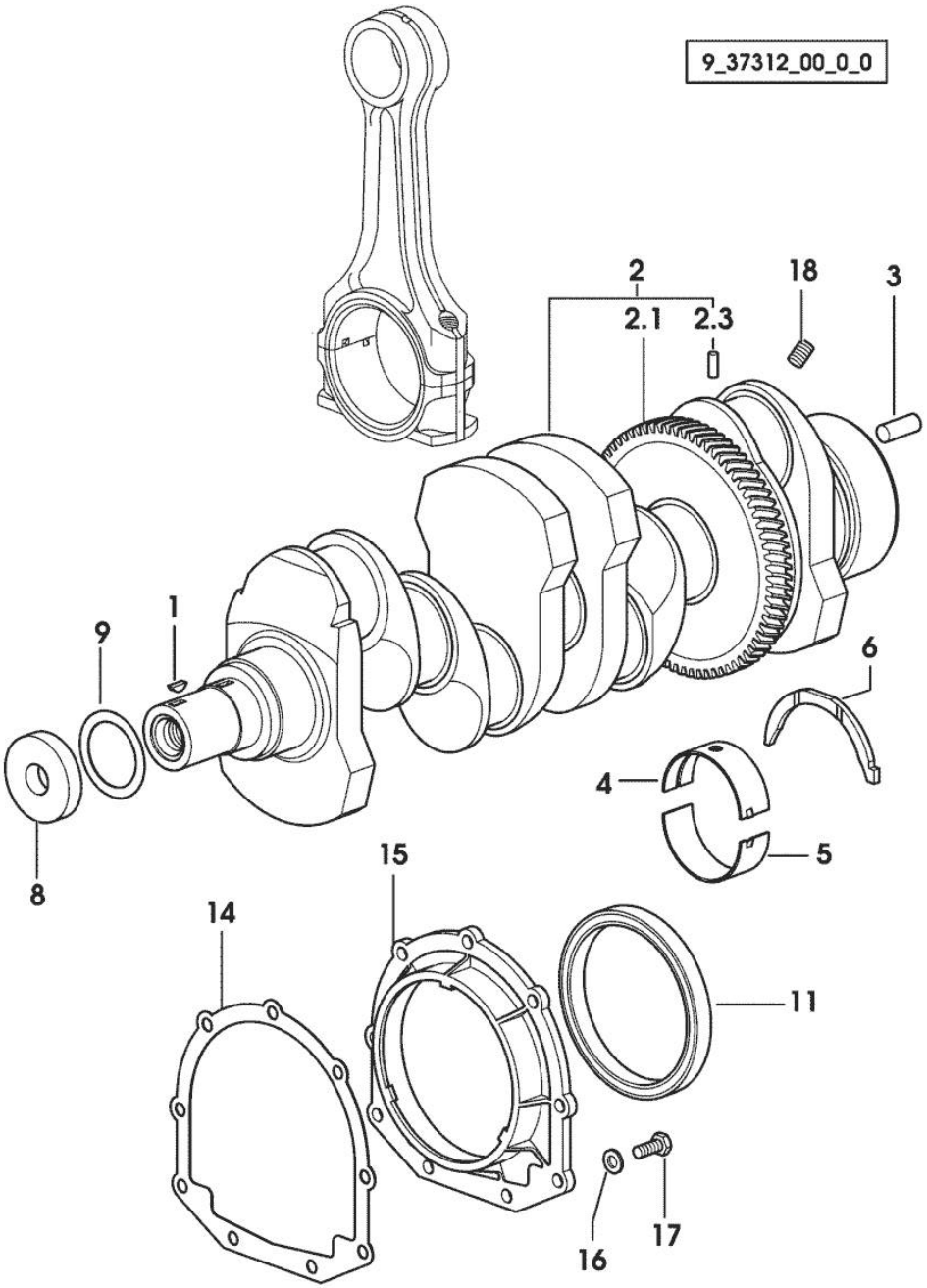

CF. 78L -> 2001

Section: ENGINE

Ref: 01.00.12

CRANKSHAFT

Fig.	P/n	QTY	Name

Notes:
[CF. 78L -> 2001]

1	2.1720.006.0	1	key 4x6.5
2	0.086.1210.3/30	1	crankshaft
2.1	0.065.1211.0/10	1	crown wheel
2.3	2.1630.608.0	1	pin 6x16
3	2.1651.915.0	1	pin 12x35
4	0.065.1215.0	5	main half bushing STANDARD
5	0.065.1216.0	5	main half bushing
6	0.065.1218.0	4	shim STANDARD
8	2.1599.524.7	1	washer 21x60x12
9	2.1589.189.0	2	shoulder ring mm 1.00
11	2.1529.073.0	1	special oil seal 110x130x13
14	0.065.1254.0/20	1	gasket
15	0.007.1711.0/10	1	cover
16	2.1475.002.2	9	conical washer 8
17	2.0112.207.2	9	screw m 8 p 1.25 x 20
18	2.3130.001.1	4	plug 1/8" gas

Buy Now

Our support email:

ebooklibonline@outlook.com