Section: B0 - ENGINE Ref: B0.01.0 (1)

CRANKCASE

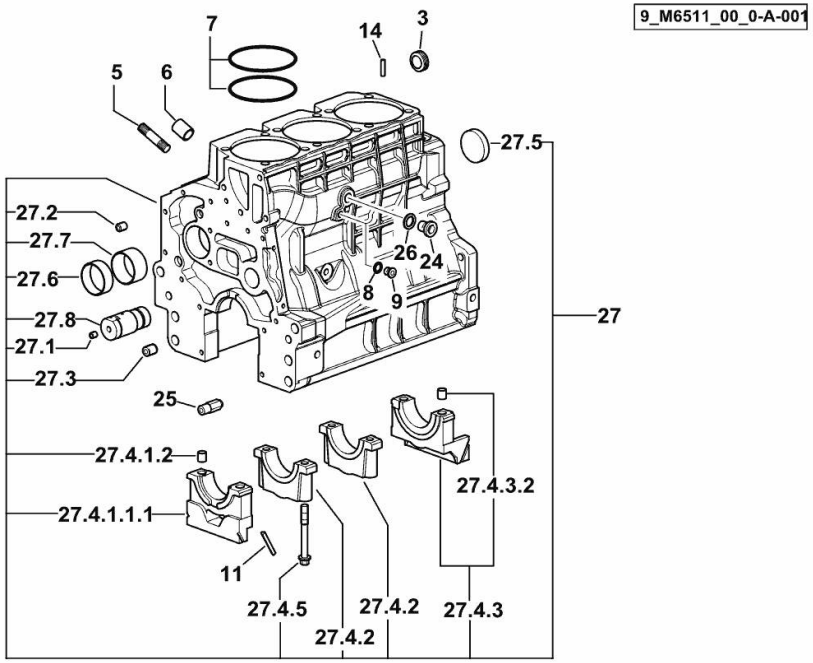

Fig.	P/n	QTY	Name

Notes:
[RS.70 (24"-28") -> 5001]

3	2.3199.312.2/20	1	plug m 35x1.5x9.5
5	2.0439.273.7	6	stud bolt m 8
6	2.1559.188.2	3	bush 11.4 x 14 x16
7	2.1539.259.0	6	special oil seal 107.62x2.62
8	2.1560.010.0	1	gasket 14.2 x 20
9	2.3199.292.0	1	plug 1/4" gas
11	0.066.1152.0/10	4	gasket
14	2.1549.154.2	3	bush 4.8x5.8x16
24	2.3120.101.0	1	plug m 18 p.1.5
25	0.013.4946.0/10	1	sprayer nozzle
26	2.1560.014.0	1	washer 18.2 x 24
27	0.015.2793.4/10	1	crankcase
27.1	2.3130.001.1	9	plug 1/8" gas
27.2	2.3130.002.1	2	plug 1/4" gas
27.3	2.3130.003.1	2	plug 3/8" gas
27.4.1.1.1	0.065.1112.7/10	1	support
27.4.1.2	2.1699.165.0	1	bush 12.3x15x16
27.4.2	0.065.1114.0/10	2	support
27.4.3	0.065.1116.3	1	support
27.4.3.2	2.1699.165.0	1	bush 12.3x15x16
27.4.5	0.065.1117.0	8	screw m 12 x 100
27.5	2.3179.012.0	1	plug 60
27.6	0.065.1140.0	3	special bushing 59X55X20
27.7	0.065.1141.0	1	special bushing 59X55X30
27.8	0.014.1340.0/10	1	pin mm 85

Section: B0 - ENGINE Ref: B0.01.1 (1)

CRANKCASE

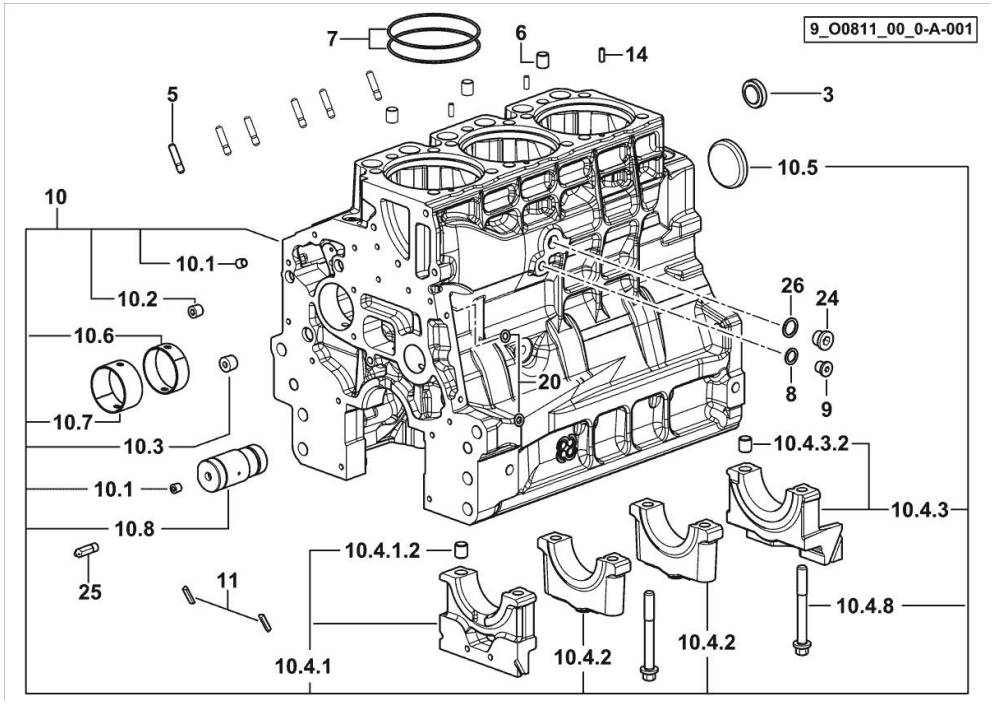

Fig.	P/n	QTY	Name

Notes:
- EXPORT U.S.A. [RS.70 (24"-28") -> 5001]

3	2.3199.312.2/20	1	plug m 35x1.5x9.5
5	2.0439.279.7	6	stud bolt m 8 p.1 x 25
6	2.1559.188.2	3	bush 11.4 x 14 x16
7	2.1539.259.0	6	special oil seal 107.62x2.62
8	2.1560.010.0	1	gasket 14.2 x 20
9	2.3199.292.0	1	plug 1/4" gas
10	0.014.9911.4/30	1	crankcase
10.1	2.3130.001.1	12	plug 1/8" gas
10.2	2.3130.002.1	4	plug 1/4" gas
10.3	2.3130.003.1	2	plug 3/8" gas
10.4.1	0.065.1112.3	1	support
10.4.1.2	2.1699.165.0	1	bush 12.3x15x16
10.4.2	0.065.1114.0/10	2	support
10.4.3	0.065.1116.3	1	support
10.4.3.2	2.1699.165.0	1	bush 12.3x15x16
10.4.8	0.065.1117.0	8	screw m 12 x 100
10.5	2.3179.012.0	1	plug 60
10.6	0.065.1140.0	3	special bushing 59X55X20
10.7	0.065.1141.0	1	special bushing 59X55X30
10.8	0.014.1340.0/10	1	pin mm 85
11	0.066.1152.0/10	4	gasket
14	2.1549.154.2	3	bush 4.8x5.8x16
20	2.1470.004.2	4	lock washer 8
24	2.3120.101.0	1	plug m 18 p.1.5
25	0.013.4946.0/10	1	sprayer nozzle
26	2.1560.014.0	1	washer 18.2 x 24

Section: B0 - ENGINE Ref: B0.01.4 (1)

MONOBLOC ENGINE-GEARBOX CONNECTING FLANGE

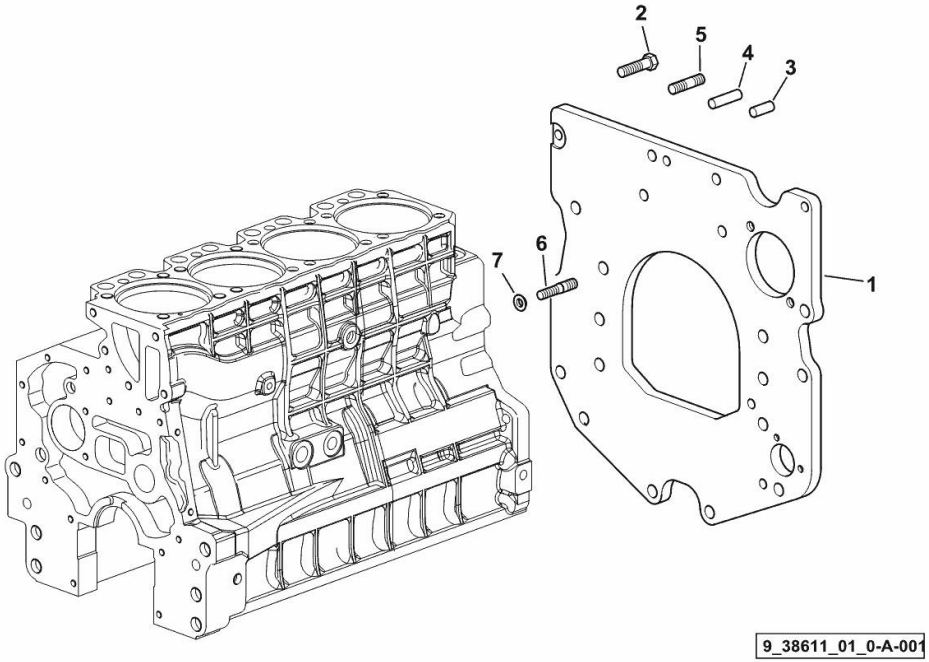

Fig.	P/n	QTY	Name

Notes:
[RS.70 (24"-28") -> 5001]

1	0.007.1882.0/50	1	flange
2	2.0112.511.2	8	screw m 14 p.2 x 30
3	2.1651.912.0	2	cylindrical plug 12x28
4	2.1651.917.0	1	cylindrical plug 12x40
5	2.0432.257.7	1	stud bolt m 12 p.1.75 - 1.25 x 30
6	2.0439.250.7	1	stud bolt m 12 / m 10 x 30
7	0.011.9294.0/10	1	bush

Section: B0 - ENGINE

Ref: B0.02.0 (1)

CRANKSHAFT

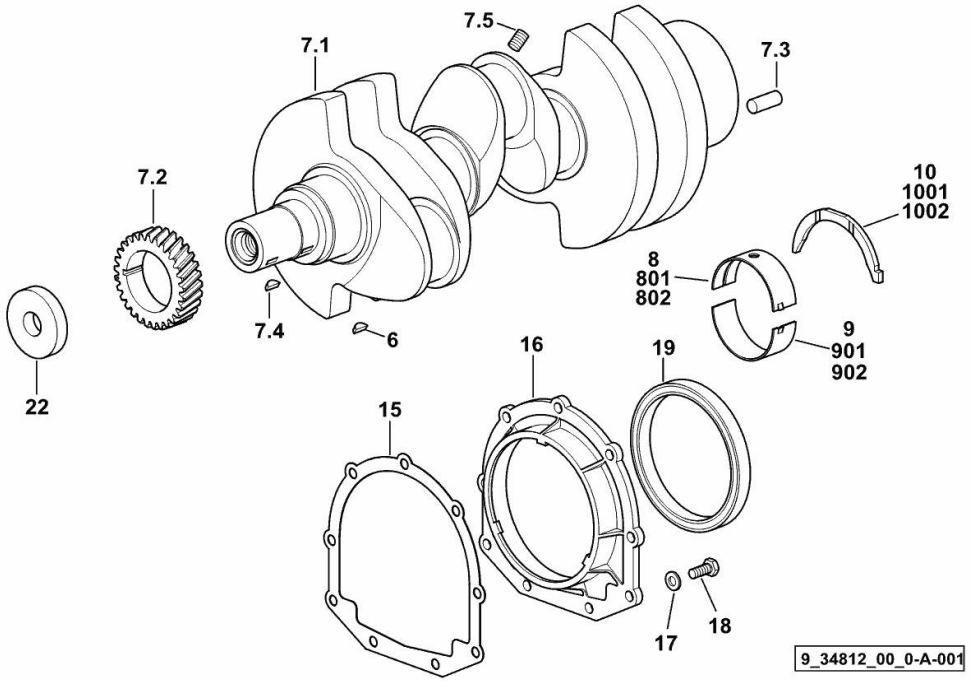

Fig.	P/n	QTY	Name

Notes:
[RS.70 (24"-28") -> 5001]

6	2.1720.006.0	1	key 4x6.5
7.1	0.007.1554.0/20	1	crankshaft
7.2	0.065.1323.0/30	1	gear Z = 29
7.3	2.1651.915.0	1	pin 12x35
7.4	2.1720.006.0	1	key 4x6.5
7.5	2.3130.001.1	3	plug 1/8" gas
8	0.065.1215.0/10	4	main half bushing STANDARD
9	0.065.1216.0/10	4	main half bushing STANDARD
10	0.065.1218.0	4	shim STANDARD
15	0.065.1254.0/20	1	gasket
16	0.007.1711.0/10	1	cover
17	2.1475.002.2	9	conical washer 8
18	2.0112.207.2	9	screw m 8 p 1.25 x 20
19	2.1529.073.0	1	special oil seal 110x130x13
22	2.1599.524.7	1	washer 21x60x12
801	0.065.1215.7		main half bushing - mm 0.25
802	0.065.1215.8		main half bushing - mm 0.50
901	0.065.1216.7		main half bushing - mm 0.25
902	0.065.1216.8		main half bushing - mm 0.50
1001	0.065.1218.7		shim + mm 0.10
1002	0.065.1218.8		shim + mm 0.15

Section: B0 - ENGINE

Ref: B0.02.3 (1)

CRANKSHAFT PULLEY

Fig.	P/n	QTY	Name

Notes:
[RS.70 (24"-28") -> 5001]

1	0.013.6349.0/10	1	pulley
2	0.011.3515.0/20	1	hub Z = 48
3	0.065.1256.0	2	ring 45x52
4	2.1579.865.0	1	spacer 45.2x51.8x10
5	2.0439.195.7	1	stud bolt m 20 p.1.5x80
6	2.1019.094.7	1	nut m 20 p.1.5
7	2.0112.320.2	6	screw m 10 p.1.5 x 55
8	2.1470.006.2	6	lock washer 10

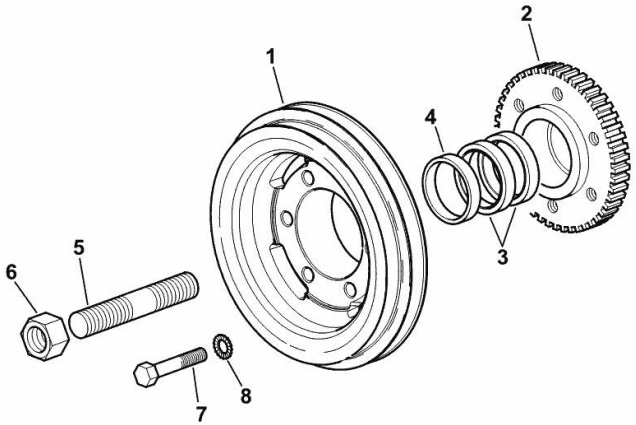

9_N1412_03_0-A-001

Section: B0 - ENGINE

Ref: B0.02.4 (1)

ENGINE FLYWHEEL

Fig.	P/n	QTY	Name

Notes:
[RS.70 (24"-28") -> 5001]

1	0.014.2774.3	1	flywheel
1.2	0.069.1242.0	1	crown wheel Z = 121
2	2.0139.036.2	6	screw m 12 p.1.25 x 35

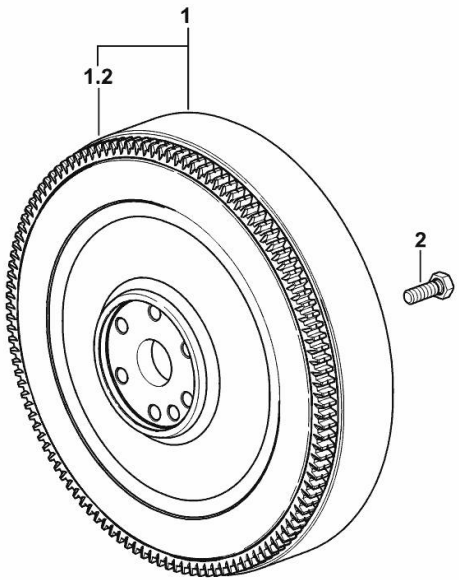

9_N1112_02_0-A-001

Section: B0 - ENGINE

Ref: B0.02.7 (1)

COOLANT PUMP AND ALTERNATOR DRIVEBELT

Fig.	P/n	QTY	Name

Notes:
- FOR TRACTORS WITHOUT AIR CONDITIONING [RS.70 (24"-28") -> 5001]

1	2.4119.190.0/10	1	belt AV 12.7x1240 mm

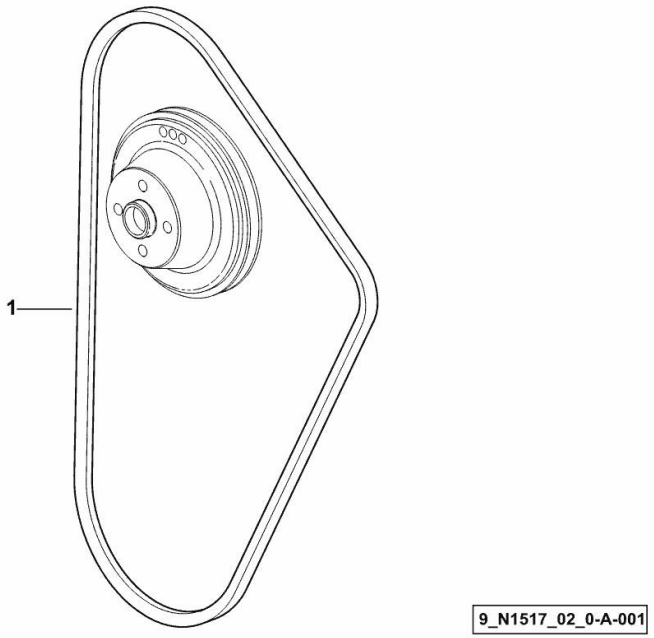

Buy Now

Our support email:

ebooklibonline@outlook.com