CATERPILLAR®

Service Repair Manual

Models

140K 2 MOTOR GRADER

Product: MOTOR GRADER
Model: 140K 2 MOTOR GRADER SZW
Configuration: 140K Series 2 Motor Grader SZW00001-UP (MACHINE) POWERED BY C7 Engine

Disassembly and Assembly
12K, 140K and 160K Motor Graders Power Train
Media Number -KENR8443-04 **Publication Date -01/03/2017** **Date Updated -28/03/2017**

i02186165

Final Drive - Disassemble

SMCS - 4050-015

Disassembly Procedure

Table 1

Required Tools			
Tool	**Part Number**	**Part Description**	**Qty**
A	439-3938	Link Brackets	2
B	5P-4204	Wrench Assembly	1

Start By:

a. Remove the final drives. Refer to Disassembly and Assembly, "Final Drive - Remove"for the correct procedure.

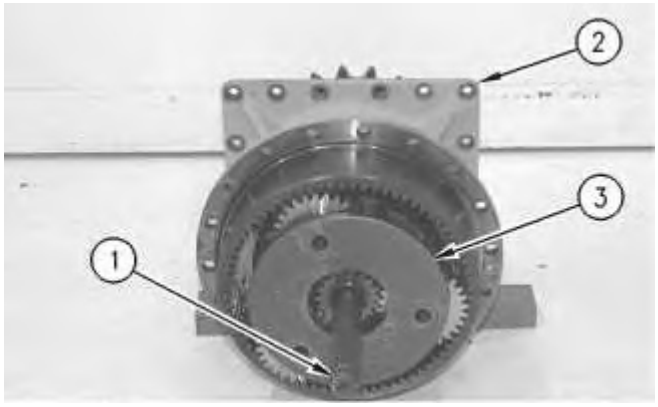

Illustration 1 g00621106

1. Remove sun gear shaft (1) from housing (2).
2. Remove planetary carrier (3) from housing (2).

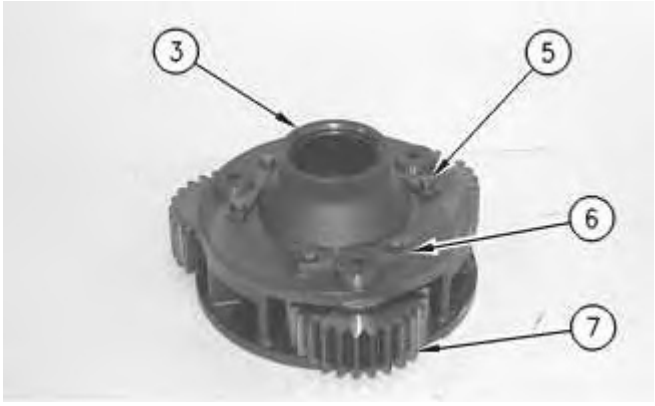

Illustration 2 g00621108

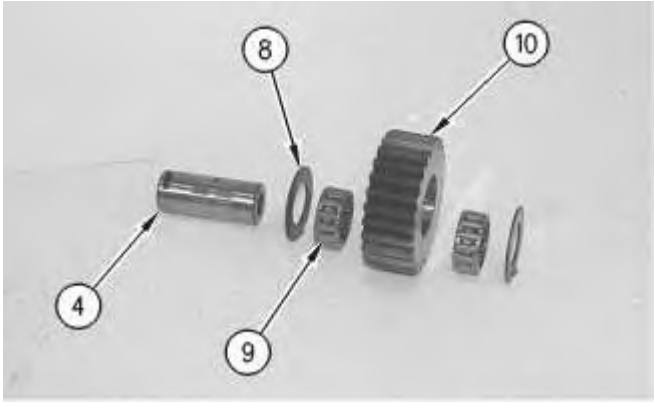

Illustration 3 g00621109

3. Remove locking bolts (5), the washers, and retainers (6) from planetary carrier (3).
4. Remove planetary shafts (4) to remove gear assemblies (7) from planetary carrier (3).

   Note: Each gear assembly (7) consists of two washers (8), two roller assemblies (9), gear (10) and planetary shaft (4).

   Note: Mark the location of the components of the gear assemblies for assembly purposes.

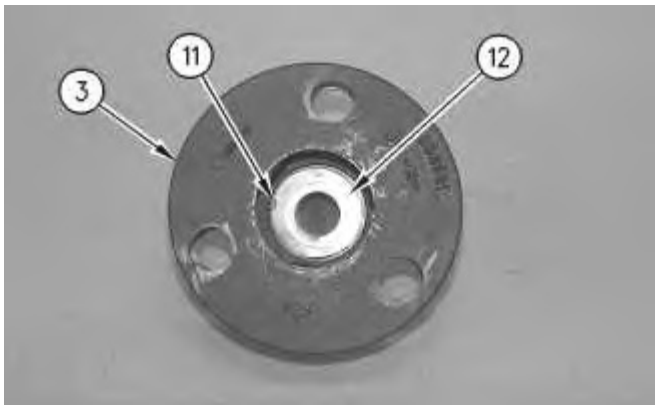

Illustration 4 g00621111

5. Remove retaining ring (11) and washer (12) from planetary carrier (3).

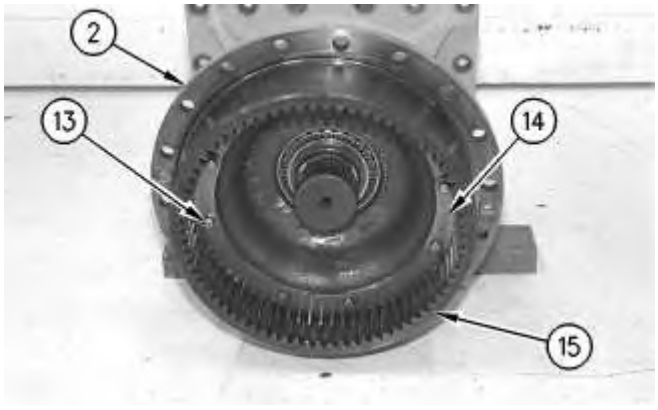

Illustration 5 g00621112

6. Remove locking bolts (13), the washers, and plates (14) to remove ring gear (15).
7. Remove ring gear (15) from the housing (2).

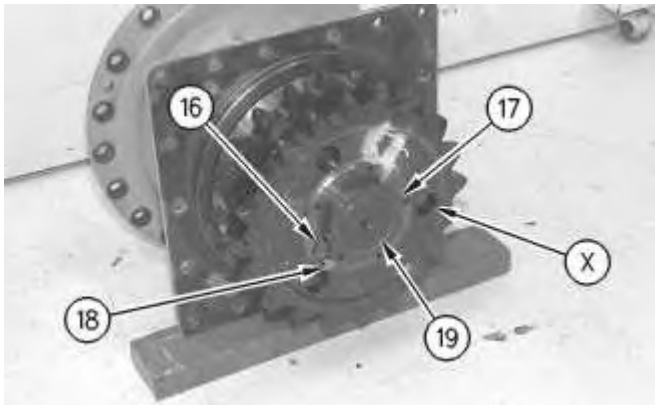

Illustration 6 g00621113

8. Remove locking bolt (18), the washer, and lock (16) which holds nut (17) to drive shaft (19).

Note: Notice that the lubrication holes (X) in sprockets (20) are in alignment. This will help in assembly procedures.

9. Use Tooling (B) (not shown) to remove nut (17) from the drive shaft (19).

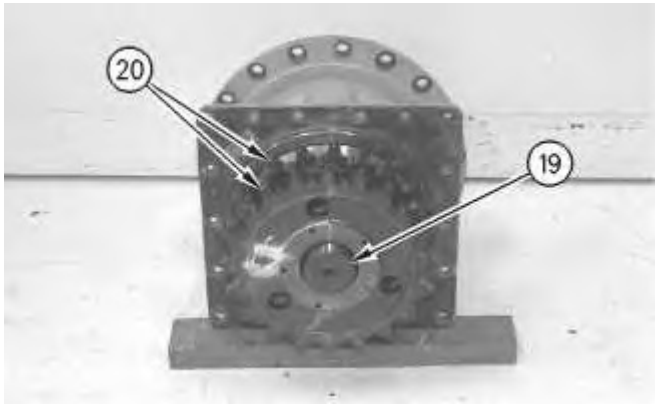

Illustration 7 g00621114

10. Remove two sprockets (20) from drive shaft (19).

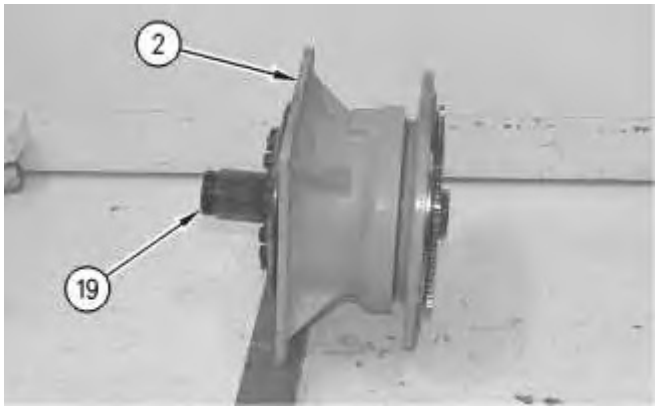

Illustration 8 g00621116

11. Remove drive shaft (19) and two roller bearing cones from housing (2). One of the roller bearing cones will be removed with drive shaft (19). The remaining roller bearing cone must be removed from the other end of housing (2). This will be completed during Step 12.

Thank you so much for reading.

Please click the “Buy Now!” button below to download the complete manual.

After you pay.

You can download the most perfect and complete manual in the world immediately.

Our support email:

ebooklibonline@outlook.com