Service Manual

JS130W, JS145W, JS160W, JS175W

Publication No.

9803/6590-4

World Class
Customer Support

Notes:

Contents **Page No.**

Contents **Page No.**

Introduction

About this Manual

Machine Model and Serial Number

This manual provides information for the following model(s) in the JCB machine range:

JCB JS130W from serial number 01060300 to 01060999.

JCB JS145W from serial number 01314300 to 01314599.

JCB JS145W from serial number 01458000 to 01458999.

JCB JS145W from serial number 01613000 to 1613999.

JCB JS160W from serial number 01421600 to 01421799.

JCB JS160W from serial number 01451000 to 01451999.

JCB JS175W from serial number 01505100 to 01505284.

JCB JS175W from serial number 01505286 to 01505499.

Using the Service Manual

T11-004

This publication is designed for the benefit of JCB Distributor Service Engineers who are receiving, or have received, training by JCB Technical Training Department.

These personnel should have a sound knowledge of workshop practice, safety procedures, and general techniques associated with the maintenance and repair of hydraulic earthmoving equipment.

The illustrations in this publication are for guidance only. Where the machines differ, the text and/or the illustration will specify.

General warnings in Section 2 are repeated throughout the manual, as well as specific warnings. Read all safety statements regularly, so you do not forget them.

Renewal of oil seals, gaskets, etc., and any component showing obvious signs of wear or damage is expected as a matter of course. It is expected that components will be cleaned and lubricated where appropriate, and that any opened hose or pipe connections will be blanked to prevent excessive loss of hydraulic fluid and ingress of dirt.

Where a torque setting is given as a single figure it may be varied by plus or minus 3%. Torque figures indicated are for dry threads, hence for lubricated threads may be reduced by one third.

The manufacturer's policy is one of continuous improvement. The right to change the specification of the machine without notice is reserved. No responsibility will be accepted for discrepancies which may occur between specifications of the machine and the descriptions contained in this publication.

Finally, please remember above all else safety must come first!

Section Numbering

T11-005

The manual is compiled in sections, the first three are numbered and contain information as follows:

1 General Information - includes torque settings and service tools.

2 Care and Safety - includes warnings and cautions pertinent to aspects of workshop procedures etc.

3 Maintenance - includes service schedules and recommended lubricants for all the machine.

The remaining sections are alphabetically coded and deal with Dismantling, Overhaul etc. of specific components, for example:

A Attachments

B Body and Framework, etc.

Section contents, technical data, circuit descriptions, operation descriptions etc. are inserted at the beginning of each alphabetically coded section.

Left Side, Right Side

In this manual, 'left' **A** and 'right' **B** mean your left and right when you are seated correctly in the machine.

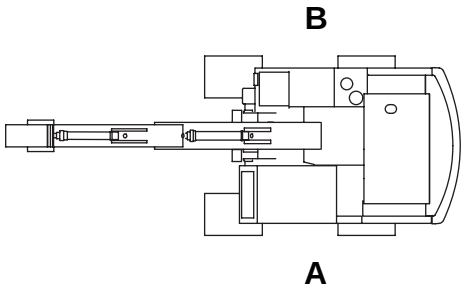

Cross References

T1-004_2

In this publication, page cross references are made by presenting the subject title printed in bold, italic and underlined. It is preceeded by the 'go to' symbol. The number of the page upon which the subject begins, is indicated within the brackets. For example: ***Cross References (1-2)***.

Identifing Your Machine

Machine Identification Plate

Your machine has a data plate located on the outside the cab as shown at **A**. The machine serial number is inscribed at **B** which is the base plate of the rear frame.

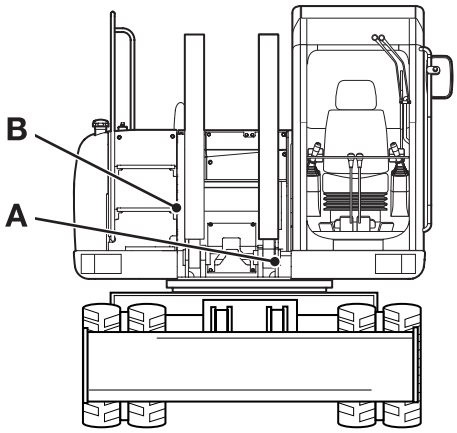

Fig 1.

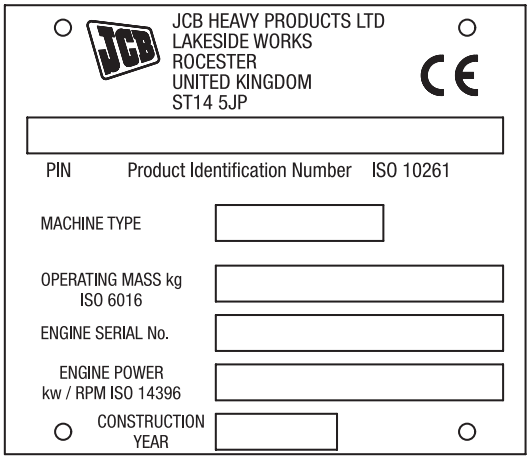

Fig 2.

Typical Product Identification Number (PIN)

1	2	3	4
JCB	JW175	C	01018354

1 World Manufacturer Identification (JCB)

2 Machine Type and Model (JW175 = JS175 Wheeled)

3 Randomly generated check letter.

4 Machine Serial Number (01018354)

Component Identification Plates

Typical Engine Identification Number

If the engine is replaced by a new one, the data plate serial number will be wrong. Either stamp the new number on the plate or stamp out the old one. This will prevent the wrong number being quoted when you order replacement parts.

The engine number is stamped at **A**.

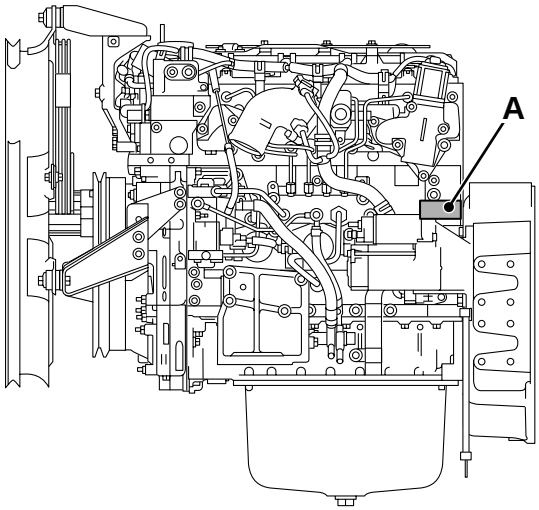

Fig 3. 4JJ

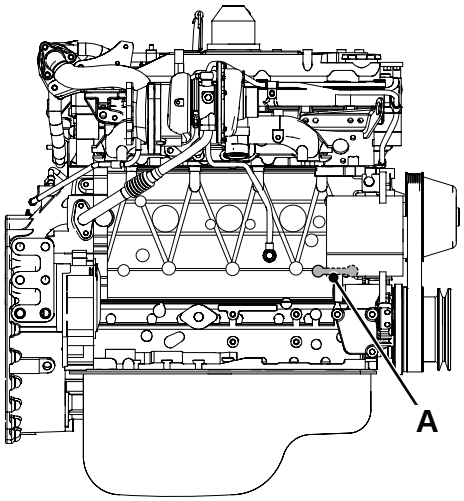

Fig 4. 4HK

Axle Serial Plate

The axle serial number is stamped on a plate **D** mounted to the rear face of the axle.

When replacement parts are required, always ensure that the correct parts are obtained, e.g. in the case of gear replacements, always check the part number stamped on the gear, and the number of teeth.

When ordering replacement parts, quote the details on the serial plate as shown.

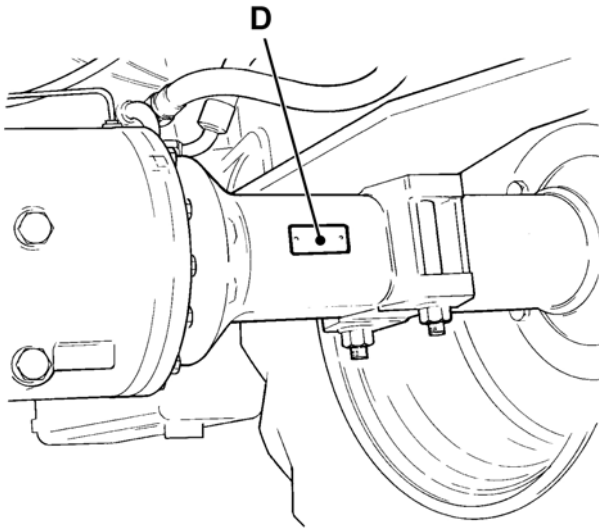

Fig 5.

Torque Settings

Zinc Plated Fasteners and Dacromet Fasteners

T11-002

Introduction

Some external fasteners on JCB machines are manufactured using an improved type of corrosion resistant finish. This type of finish is called Dacromet and replaces the original Zinc and Yellow Plating used on earlier machines.

The two types of fasteners can be readily identified by colour and part number suffix. ⇒ ***Table 1. Fastener Types (🗋 1-5)***.

Table 1. Fastener Types

Fastener Type	Colour	Part No. Suffix
Zinc and Yellow	Golden finish	'Z' (e.g. 1315/3712Z)
Dacromet	Mottled silver finish	'D' (e.g. 1315/3712D)

Note: *As the Dacromet fasteners have a lower torque setting than the Zinc and Yellow fasteners, the torque figures used must be relevant to the type of fastener.*

Note: *A Dacromet bolt should not be used in conjunction with a Zinc or Yellow plated nut, as this could change the torque characteristics of the torque setting further. For the same reason, a Dacromet nut should not be used with a Zinc or Yellow plated bolt.*

Note: *All bolts used on JCB machines are high tensile and must not be replaced by bolts of a lesser tensile specification.*

Note: *Dacromet bolts, due to their high corrosion resistance are used in areas where rust could occur. Dacromet bolts are only used for external applications. They are not used in applications such as gearbox or engine joint seams or internal applications.*

Bolts and Screws

Use the following torque setting tables only where no torque setting is specified in the text.

Note: *Dacromet fasteners are lubricated as part of the plating process, do not lubricate.*

Torque settings are given for the following conditions:

Condition 1

- Un-lubricated fasteners
- Zinc fasteners
- Yellow plated fasteners

Condition 2

- Zinc flake (Dacromet) fasteners
- Lubricated zinc and yellow plated fasteners
- Where there is a natural lubrication. For example, cast iron components

Verbus Ripp Bolts

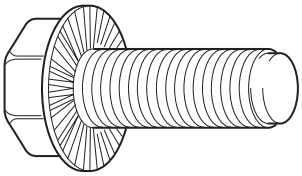

Fig 1.

Torque settings for these bolts are determined by the application. Refer to the relevant procedure for the required settings.

Zinc Plated Fasteners and Dacromet Fasteners

Table 2. Torque Settings - UNF Grade 'S' Fasteners

Bolt Size		Hexagon (A/F)	Condition 1			Condition 2		
in.	mm	in.	Nm	kgf m	lbf ft	Nm	kgf m	lbf ft
1/4	6.3	7/16	11.2	1.1	8.3	10.0	1.0	7.4
5/16	7.9	1/2	22.3	2.3	16.4	20.0	2.0	14.7
3/8	9.5	9/16	40.0	4.1	29.5	36.0	3.7	26.5
7/16	11.1	5/8	64.0	6.5	47.2	57.0	5.8	42.0
1/2	12.7	3/4	98.00	10.0	72.3	88.0	9.0	64.9
9/16	14.3	13/16	140.0	14.3	103.2	126.0	12.8	92.9
5/8	15.9	15/16	196.0	20.0	144.6	177.0	18.0	130.5
3/4	19.0	1 1/8	343.0	35.0	253.0	309.0	31.5	227.9
7/8	22.2	1 15/16	547.0	55.8	403.4	492.0	50.2	362.9
1	25.4	1 1/2	814.0	83.0	600.4	732.0	74.6	539.9
1 1/8	31.7	1 7/8	1181.0	120.4	871.1	1063.0	108.4	784.0
1 1/4	38.1	2 1/4	1646.0	167.8	1214.0	1481.0	151.0	1092.3

Table 3. Torque Settings - Metric Grade 8.8 Fasteners

Bolt Size		Hexagon (A/F)	Condition 1			Condition 2		
ISO Metric Thread	mm	mm	Nm	kgf m	lbf ft	Nm	kgf m	lbf ft
M5	5	8	5.8	0.6	4.3	5.2	0.5	3.8
M6	6	10	9.9	1.0	7.3	9.0	0.9	6.6
M8	8	13	24.0	2.4	17.7	22.0	2.2	16.2
M10	10	17	47.0	4.8	34.7	43.0	4.4	31.7
M12	12	19	83.0	8.5	61.2	74.0	7.5	54.6
M16	16	24	205.0	20.9	151.2	184.0	18.8	135.7
M20	20	30	400.0	40.8	295.0	360.0	36.7	265.5
M24	24	36	690.0	70.4	508.9	621.0	63.3	458.0
M30	30	46	1372.0	139.9	1011.9	1235.0	125.9	910.9
M36	36	55	2399.0	244.6	1769.4	2159.0	220.0	1592.4

Zinc Plated Fasteners and Dacromet Fasteners

Table 4. Metric Grade 10.9 Fasteners

Bolt Size		Hexagon (A/F)	Condition 1			Condition 2		
ISO Metric Thread	mm	mm	Nm	kgf m	lbf ft	Nm	kgf m	lbf ft
M5	5	8	8.1	0.8	6.0	7.3	0.7	5.4
M6	6	10	13.9	1.4	10.2	12.5	1.3	9.2
M8	8	13	34.0	3.5	25.0	30.0	3.0	22.1
M10	10	17	67.0	6.8	49.4	60.0	6.1	44.2
M12	12	19	116.0	11.8	85.5	104.0	10.6	76.7
M16	16	24	288.0	29.4	212.4	259.0	26.4	191.0
M20	20	30	562.0	57.3	414.5	506.0	51.6	373.2
M24	24	36	971.0	99.0	716.9	874.0	89.1	644.6
M30	30	46	1930.0	196.8	1423.5	1737.0	177.1	1281.1
M36	36	55	3374.0	344.0	2488.5	3036.0	309.6	2239.2

Table 5. Metric Grade 12.9 Fasteners

Bolt Size		Hexagon (A/F)	Condition 1			Condition 2		
ISO Metric Thread	mm	mm	Nm	kgf m	lbf ft	Nm	kgf m	lbf ft
M5	5	8	9.8	1.0	7.2	8.8	0.9	6.5
M6	6	10	16.6	1.7	12.2	15.0	1.5	11.1
M8	8	13	40.0	4.1	29.5	36.0	3.7	26.5
M10	10	17	80.0	8.1	59.0	72.0	7.3	53.1
M12	12	19	139.0	14.2	102.5	125.0	12.7	92.2
M16	16	24	345.0	35.2	254.4	311.0	31.7	229.4
M20	20	30	674.0	68.7	497.1	607.0	61.9	447.7
M24	24	36	1165.0	118.8	859.2	1048.0	106.9	773.0
M30	30	46	2316.0	236.2	1708.2	2084.0	212.5	1537.1
M36	36	55	4049.0	412.9	2986.4	3644.0	371.6	2687.7

Table 6. Torque Settings - Rivet Nut Bolts/Screws

Bolt Size				
ISO Metric Thread	mm	Nm	kgf m	lbf ft
M3	3	1.2	0.1	0.9
M4	4	3.0	0.3	2.0
M5	5	6.0	0.6	4.5
M6	6	10.0	1.0	7.5
M8	8	24.0	2.5	18.0
M10	10	48.0	4.9	35.5
M12	12	82.0	8.4	60.5

Table 7. Torque Settings - Internal Hexagon Headed Cap Screws (Zinc)

Bolt Size			
ISO Metric Thread	Nm	kgf m	lbf ft
M3	2.0	0.2	1.5
M4	6.0	0.6	4.5
M5	11.0	1.1	8.0
M6	19.0	1.9	14.0
M8	46.0	4.7	34.0
M10	91.0	9.3	67.0
M12	159.0	16.2	117.0
M16	395.0	40.0	292.0
M18	550.0	56.0	406.0
M20	770.0	79.0	568.0
M24	1332.0	136.0	983.0

Hydraulic Connections

T11-003

'O' Ring Face Seal System

Adaptors Screwed into Valve Blocks

Adaptor screwed into valve blocks, seal onto an 'O' ring which is compressed into a 45° seat machined into the face of the tapped port.

Table 8. Torque Settings - BSP Adaptors

BSP Adaptor Size	Hexagon (A/F)			
in.	mm	Nm	kgf m	lbf ft
1/4	19.0	18.0	1.8	13.0
3/8	22.0	31.0	3.2	23.0
1/2	27.0	49.0	5.0	36.0
5/8	30.0	60.0	6.1	44.0
3/4	32.0	81.0	8.2	60.0
1	38.0	129.0	13.1	95.0
1 1/4	50.0	206.0	21.0	152.0

Table 9. Torque Settings - SAE Connections

SAE Tube Size	SAE Port Thread Size	Hexagon (A/F)			
		mm	Nm	kgf m	lbf ft
4	7/16 - 20	15.9	20.0 - 28.0	2.0 - 2.8	16.5 - 18.5
6	9/16 - 18	19.1	46.0 - 54.0	4.7 - 5.5	34.0 - 40.0
8	3/4 - 16	22.2	95.0 - 105.0	9.7 - 10.7	69.0 - 77.0
10	7/8 - 14	27.0	130.0 - 140.0	13.2 - 14.3	96.0 - 104.0
12	1 1/16 - 12	31.8	190.0 - 210.0	19.4 - 21.4	141.0 - 155.0
16	1 5/16 - 12	38.1	290.0 - 310.0	29.6 - 31.6	216.0 - 230.0
20	1 5/8	47.6	280.0 - 380.0	28.5 - 38.7	210.0 - 280.0

Hoses Screwed into Adaptors

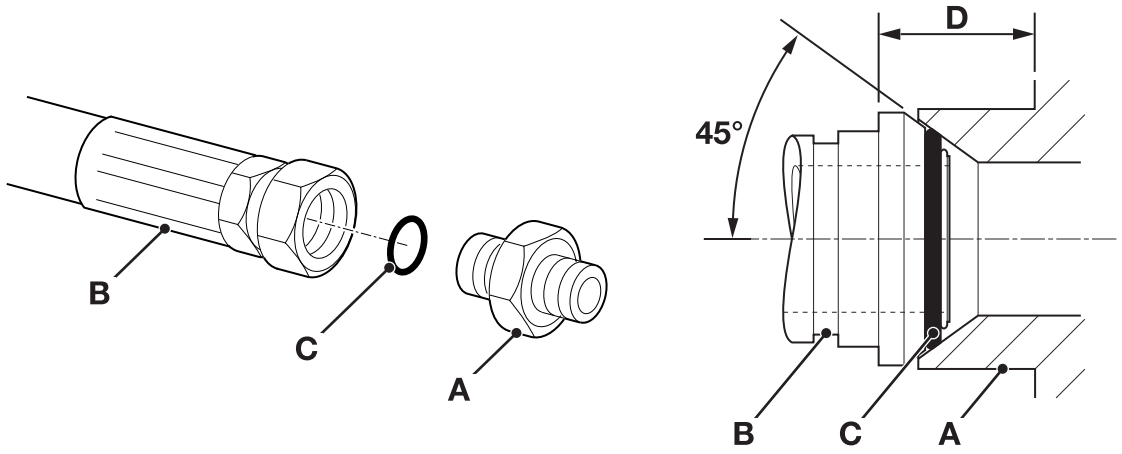

Fig 2.

Hoses **2-B** screwed into adaptors **2-A** seal onto an `O' ring **2-C** which is compressed into a 45° seat machined into the face of the adaptor port.

Note: *Dimension **2-D** will vary depending upon the torque applied.*

Table 10. BSP Hose - Torque Settings

BSP Hose Size	Hexagon (A/F)			
in.	mm	Nm	kgf m	lbf ft
1/8	14.0	14.0 - 16.00	1.4 - 1.6	10.3 - 11.8
1/4	19.0	24.0 - 27.0	2.4 - 2.7	17.7 - 19.9
3/8	22.0	33.0 - 40.0	3.4 - 4.1	24.3 - 29.5
1/2	27.0	44.0 - 50.0	4.5 - 5.1	32.4 - 36.9
5/8	30.0	58.0 - 65.0	5.9 - 6.6	42.8 - 47.9
3/4	32.0	84.0 - 92.0	8.6 - 9.4	61.9 - 67.8
1	38.0	115.0 - 126.0	11.7 - 12.8	84.8 - 92.9
1 1/4	50.0	189.0 - 200.0	19.3 - 20.4	139.4 - 147.5
1 1/2	55.0	244.0 - 260.0	24.9 - 26.5	180.0 - 191.8

Buy Now

Our support email:

ebooklibonline@outlook.com