Service Manual

LK1 Personnel Platform (Supplement)

Publication No.

9803/3700-3

World Class
Customer Support

Notes:

Contents **Page No.**

Contents **Page No.**

Hydraulics

Contents **Page No.**

Introduction

General Information

Machine Model and Serial Number

This manual supplement provides information for the LK1 Work Platform, compatible with the following models in the JCB machine range:

3-Stage Boom Machines

- 532-120
- 535-125
- 535-140
- 537-135 (550)
- 540-140 (550-140)

4-Stage Boom Machines

- 540-170 (550-170, 5508)

About this Supplement

This manual is a supplement to the JCB Loadall Service Manual. The information covers JCB Loadall machines fitted with the LK1 Personnel Platform.

Note: *Only those areas of the machine which are different from the standard Loadall are dealt with here. For all other information refer to the appropriate Loadall Service Manual.*

Unless specified otherwise, all references to 'Service Manual' in this supplement are to be taken as meaning the Service Manual specific to the standard machine.

Read the standard Service Manual and this supplement completely to familiarise yourself with the machine before carrying out any servicing procedures.

Safety Check List

⚠ DANGER

Overhead Electrical Power Lines

You can be electrocuted if you get your machine too close to live electrical power lines. Before starting work, find out if there are electrical power lines on the jobsite. If there are, contact the local electricity supplier and ask what safety precautions you must take. Also find out if there are any local laws and regulations concerned with work near electrical power lines.

When you have found out what safety precautions, laws and regulations apply to the jobsite, make sure they are all obeyed.

5-1-5-6

⚠ DANGER

The machine must only be operated on firm ground within the limits of inclination as stated inside the cab.

0157

⚠ WARNING

Control lever/switch action may vary on machines, decals near the levers/switches show by symbols, which levers/switches cause what actions. Before operating control levers/switches check the decal to make sure you select the desired action.

5-2-2-9

⚠ WARNING

Controls

You or others can be killed or seriously injured if you operate the control levers from outside the cab. Operate the control levers only when you are correctly seated inside the cab.

INT-2-1-3

⚠ WARNING

Boom/Travelling

Operating the boom while travelling can cause accidents. You will not have total control of the machine. Never operate the boom while travelling.

5-1-5-2

⚠ WARNING

Make sure it is clear overhead before raising the boom. Keep an adequate safe distance from all electrical power lines. Contact your local power company for safety procedures.

5-2-1-5_1

⚠ WARNING

The fitting of notice boards to the platform will increase wind resistance and is prohibited.

0158

⚠ DANGER

Do not enter or exit platform with the boom in the raised position.

0159

⚠ DANGER

Machine must be in remote mode when using the platform. Do not use platform when machine is in cab mode.

0160

⚠ WARNING

Make sure that all tyres are inflated to the correct pressures as given in the relevant Manual.

0161

⚠ WARNING

Do not use the platform as a crane.

0162

⚠ WARNING

Do not extend the reach or height of the platform by the use of ladders or other equipment.

0163

⚠ WARNING

Do not use the platform when wind speed exceeds 12.5 m/s (41 ft/s).

0164_2

WARNING

Do not allow the machine into contact with fixed objects, buildings, etc.

0165

WARNING

Do not allow the machine into contact with moving objects, vehicles, cranes, etc.

0166

WARNING

Do not exceed the maximum rated load stated on the platform.

0167

WARNING

All operators must be adequately trained and authorised to use the machine.

0168

WARNING

All operators must enforce a restricted work area under the platform to safeguard against falling objects injuring bystanders.

0169

WARNING

All operators must use appropriate safety harnesses when operating from the platform. Hard hats with chin straps must also be worn.

0170

WARNING

Do not lower a slewed platform to a height below 2 metres (80 inches) from the ground as the platform could hit the front of the machine.

5-2-7-4

CAUTION

Before carrying out arc welding on the machine, disconnect the battery and alternator to protect the circuits and components.

The battery must still be disconnected even if a battery isolator is fitted.

The machine is equipped with electronic control units (E.C.U.s) and a radio receiver. Disconnect them before welding. Failure to disconnect these components could result in irreparable damage.

Make sure that the welding earth return path is kept as short as possible. This prevents high currents being induced in the machine chassis or wiring harnesses.

5-5-1-10

System Overview

⇨ *Fig 1. (🗋 6)*

Introduction

The LK1 personnel platform fits to the machine using the JCB Q-Fit design attachment. Loadalls become classed as MEWPs (Mobile Elevating Work Platforms) when this type of system is installed.

The system enables safe access to elevated positions during building/maintenance work.

Important: *It is not permitted for persons to enter or exit the platform once it has been raised above 500 mm (20 in) from the ground.*

Controls

Control of the boom is via a servo control lever **1** in the cab or a remote control unit **8** (RCU) from the LK1 platform **12**. Both control systems operate the same servo control valve **15** (pilot valve **16** on machines with 4-stage booms).

A safety key system prevents operation of the boom by the cab control lever **1** and RCU **8** at the same time. When the machine is operated from the cab it is in **Cabin Mode**. When the machine is operated from the RCU it is in **Remote Mode**.

All the control signals are processed by the LK1 ECU **9** located under the operator's seat.

Remote Servo Control

The LK1 work platform system enables remote control of the boom lift, lower, extend / retract and engine speed functions by an operator located in the platform **12**. The control of these functions is achieved through a remote control unit (RCU) radio transmitter **8** and radio receiver **3**. Before remote operation is enabled, there are safety interlocks which require the machine's park brake to be on and the stabilizer legs to be down. Switches **18** and **13** indicate the status of the park brake and stabilizers.

Inputs from boom angle proximity switches **7** limit the maximum boom angle when the boom is operated by the RCU. Proximity switches also isolate stabilizer and sway operation above pre-set boom angles.

The LMI transducer **5** measures the load exerted on the rear axle and sends a signal to the LK1 electronic control unit (ECU) **9**. When the machine is near its maximum working limit (when it could tip forward), the LK1 ECU prevents forward reach of the platform (extending and lowering).

Note: *When the system is operated in remote mode a safety system monitors operation of the remote control unit (RCU). If the unit is not operated during a 10 minute period the engine automatically stops. If necessary the engine can be re-started by use of the RCU.*

Emergency Operation

In case of emergency, (engine failure for example) an independent electrically driven hydraulic pump **4** is provided. The pump allows the platform to be safely lowered to the ground from the platform or the cab.

Pressing the machine isolation push button **10** stops the engine and hydraulic system in an emergency. The RCU also has an emergency stop (isolation) button.

Motion Cut Out (MC) (if fitted)

Machines fitted with MC have a load control mode selector switch **19** in the cab.

MC is always active when the LK1 personnel platform is operated by the remote control unit (RCU).

The MC system automatically reduces the speed of the boom hydraulic services. When the machine is nearing its maximum working limit (when it could tip forward) an intermittent audible alarm sounds. When the machine is at its maximum working limit forward reach of the platform is prevented. A continuous audible alarm sounds.

For information about the MC system refer to the applicable service manual supplement.

Component Location and Identification

⇨ Fig 1. (🗋 6). The LK1 work platform system comprises several separate components. The illustration is intended as a guide to identifying the components.

Component Key:			
Item:	**Description:**	**Remarks:**	**Related Topic**(1)
1	Control lever		*⇨ Joystick (🗋 149)*
2	Battery charger	For RCU battery	
3	Radio receiver		*⇨ Radio Receiver (🗋 156)*
4	Emergency pump		*⇨ Emergency Pump (🗋 203)*
5	Load moment transducer		*⇨ LMI Transducers (🗋 150)*
6	Load moment electronic processor	4-Stage boom only	*⇨ LMI Transducers (🗋 150)*
7	Boom angle proximity sensors		*⇨ Proximity Switches (🗋 154)*
8	Remote control unit (RCU)		
9	LK1 Electronic control unit (ECU)		*⇨ Electronic Control Unit (LK1 ECU) (🗋 151)*
10	Machine isolation pushbutton		
11	Slew controls	Optional. Utilises machine auxiliary hydraulics	
12	Personnel platform		
13	Stabilizer pressure switches		*⇨ Stabilizer Pressure Switches (🗋 153)*
14	Engine throttle actuator	There are two types depending on the engine type	*⇨ Engine Speed Actuator (🗋 158)*
15	Main control valve	There are two types depending on the machine model	*⇨ Control Valve (3-Stage Boom Machines) (🗋 178)* and *⇨ Control Valve (4-Stage Boom Machines) (🗋 195)*
16	Pilot valve (NEM)	4-Stage boom machines only	*⇨ Pilot Control Valves (4-Stage Boom Machines) (🗋 198)*
17	Slew valve (auxiliary pilot control valve)	4-Stage boom machines only	
18	Park brake switch		Refer to machine service manual
19	Load control mode selector switch	Machines with motion cut out (MC) only	Refer to machine operator manual

(1) Where applicable, the table contains cross-references to information related to the component.

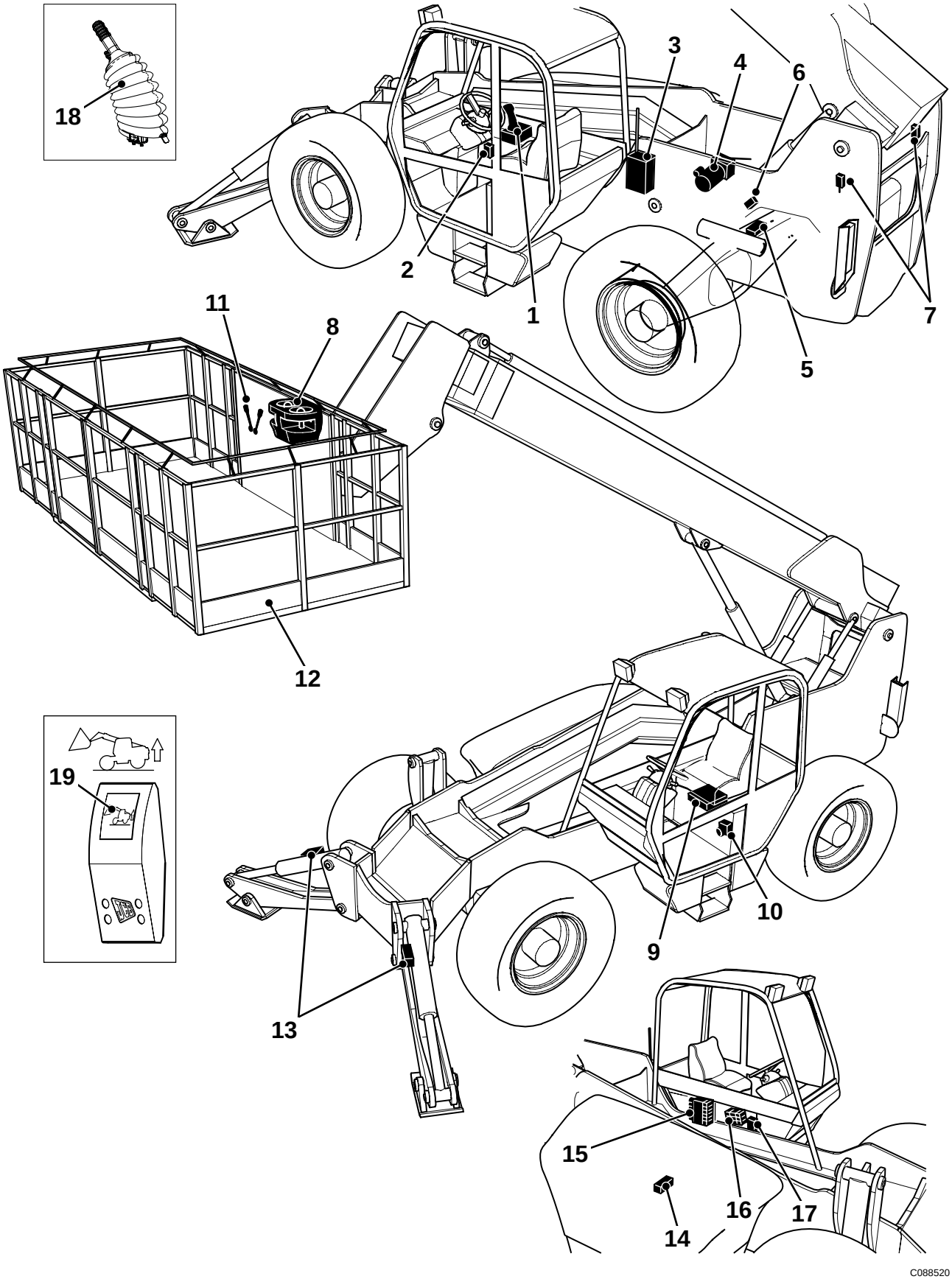

Fig 1. Component Location

System Operation

Interlocks are fitted to ensure cabin mode and remote mode operation is safe as possible. The table explains the operating logic.

Table 1.

Function	Cabin Mode	Remote Mode
Engine start	●	● (1)
Stabilizers	●	(2)
Sway	●	(3)
Boom raise	●	● (4)
Boom lower	●	●
Boom extend	●	●
Boom retract	●	●
Tilt	●	
Auxiliary hydraulics	●	
Platform slew (if fitted)		●
LCS/motion cut out	●	● (5)
LCS/motion cut out - ground mode	●	
Engine speed control	●	●
Automatic engine speed control		●
Engine stop	●	● (6)
Engine stop (after safety time period)		● (7)
Emergency stop (cab isolation button)	●	
Emergency stop (RCU isolation button)		●
Emergency boom operation	● (8)	● (8)

(1) Stabilizers must be down and the park brake must be on before engine will start.
(2) Stabilizer service is isolated. Control must be switched back to cabin mode to re-activate stabiliser service.
(3) Sway service is isolated. Control must be switched back to cabin mode to re-activate sway service.
(4) On machines with 4 stage booms the maximum boom angle is limited to 65°.
(5) The boom service speed control feature operates at the slowest speed at all times.
(6) If the engine is running when remote mode is selected, the engine will stop. The engine must be re-started by use of the remote control unit (RCU).
(7) If the remote control unit (RCU) is not operated during a 10 minute period the engine automatically stops. If necessary the engine can be re-started by use of the RCU.
(8) Enables the emergency electric hydraulic pump. Only boom lower and retract services operate. The system will not enable boom operation in the event of control valve failure.

Page left intentionally blank

Service Procedures

RCU Engine Start Procedure

When in remote mode and the RCU is left on with the engine running, the RCU will switch itself off if it is not operated within 10 minutes. This will cause the engine to stop. To re-start, turn the RCU switch **2** anti-clockwise (off) and then clockwise (on). Wait for 5 seconds, then press and hold the system enable button **8**. Press the engine start button **6**.

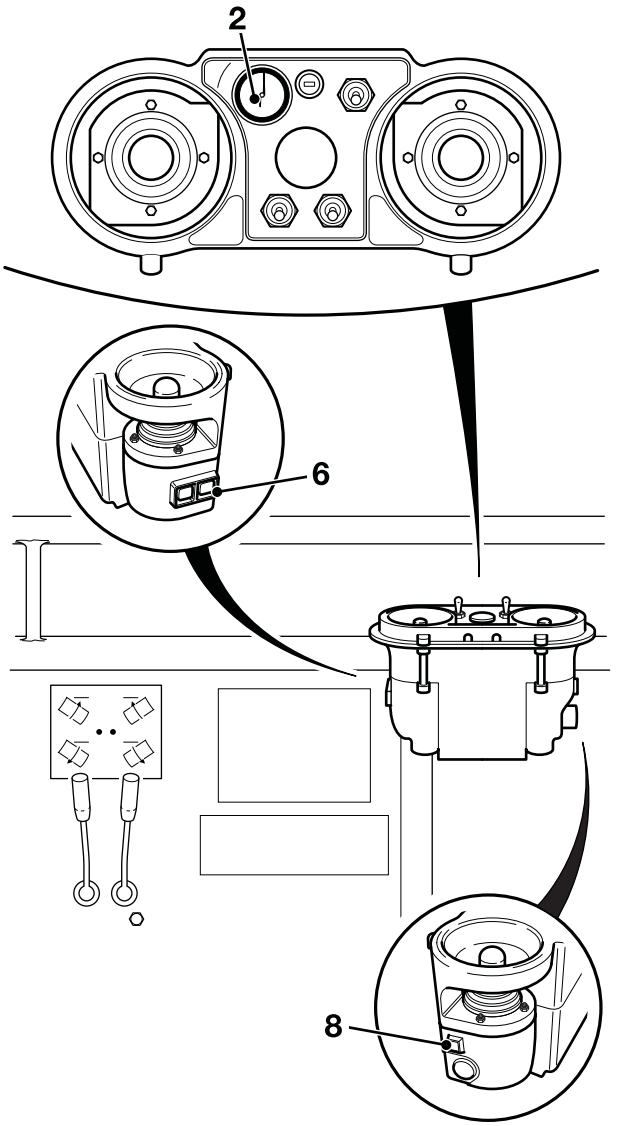

C088690

Fig 2.