Document Title: **Engine, description**	Function Group: **200**	Information Type: **Service Information**	Date: **2014/4/2 0**
Profile: **CEX, ECR88 [GB]**			

Go back to Index Page

Engine, description

- The engine is a 4–cycle, 4–cylinder, direct injected, water cooled diesel engine.
- The engine produces powerful performance using direct injection type combustion chamber.

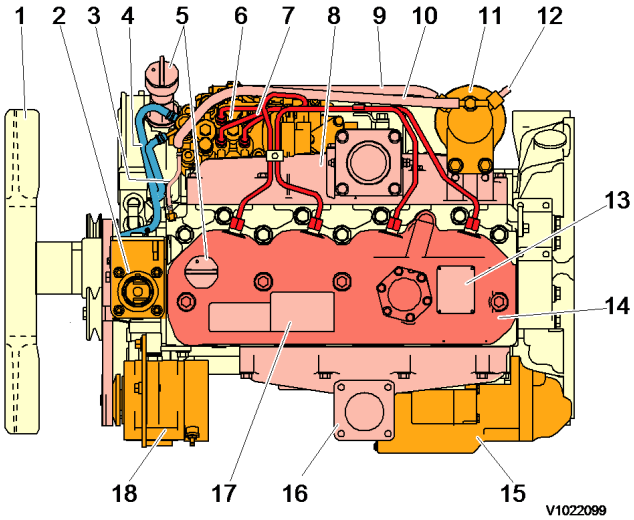

Figure 1
Engine, top side view

1	Cooling fan	7	Fuel pipe	13	Engine data plate
2	Thermostat housing	8	Intake manifold	14	Rocker arm cover
3	Fuel return line Flywheel	9	Fuel supply line to fuel injection pump	15	Start motor
4	Hose for thermostat element	10	Fuel return line	16	Exhaust manifold
5	Oil filler port	11	Fuel filter	17	Engine data plate
6	Fuel injection pump	12	Fuel supply line to fuel filter	18	Alternator

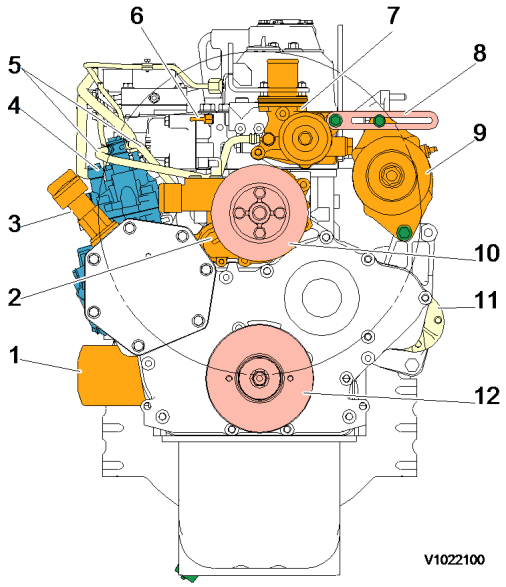

Figure 2
Engine, front side view

1	Engine oil filter	5	Hose for thermostat element	9	Alternator
2	Cooling water pump	6	Fuel return line	10	Fan pulley
3	Engine oil filler port	7	Thermostat housing	11	Starter motor
4	Fuel injection pump	8	Adjuster	12	Crankshaft V-pulley

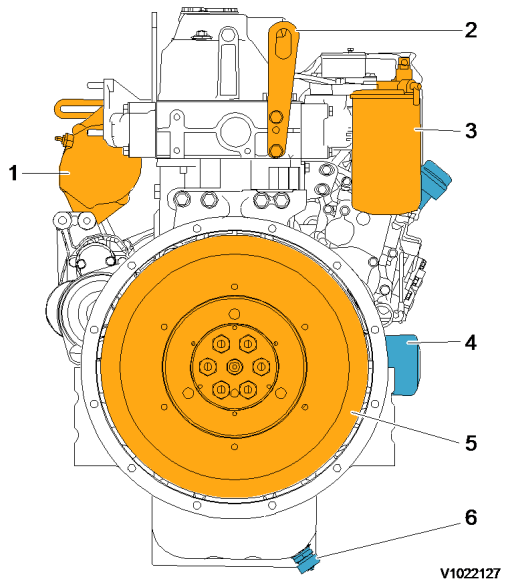

Figure 3
Engine, rear side view

1. Alternator
2. Lifting bracket
3. Fuel filler
4. Engine oil filter
5. Flywheel
6. Oil drain valve (M22 x 1.5P)

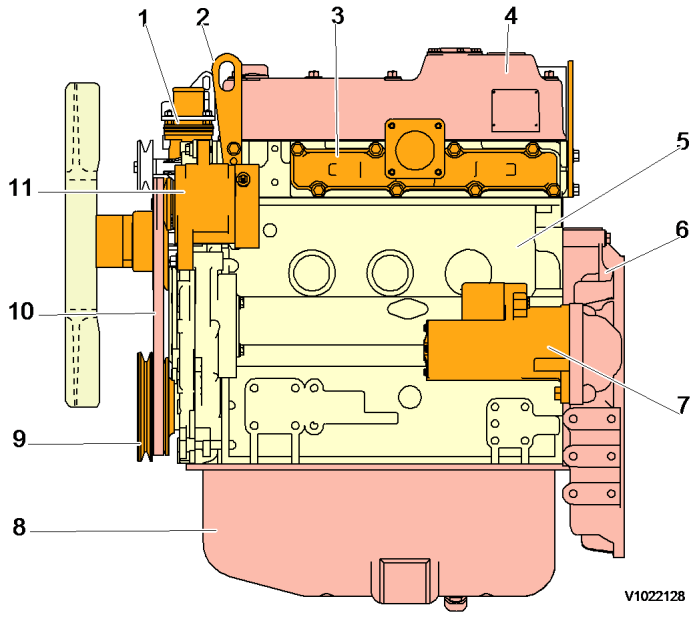

Figure 4
Engine, starter motor side view

1	Thermostat housing	7	Starter motor
2	Lifting eye	8	Engine oil pan
3	Exhaust manifold	9	Crankshaft V-pully
4	Rocker arm cover	10	V-belt
5	Cylinder block	11	Alternator
6	Flywheel housing		

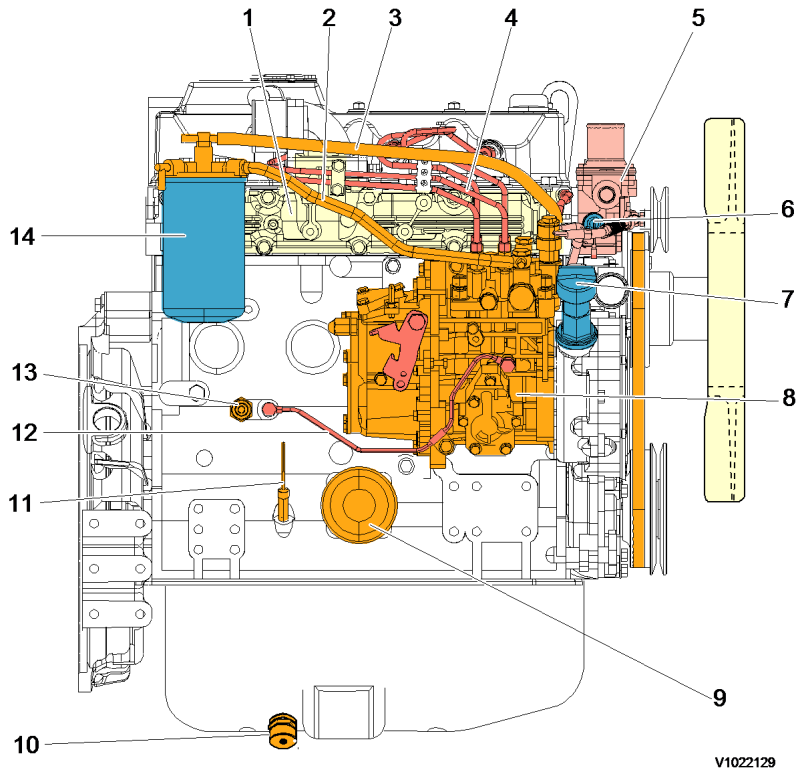

Figure 5
Engine, fuel filter side view

1	Intake manifold	6	C. W. switch	11	Engine oil dipstick
2	Fuel supply line	7	Oil filler port	12	Injection pump lubricant pipe
3	Fuel return line	8	Fuel injection pump	13	Oil pressure switch
4	Fuel injection pipe	9	Engine oil filter	14	Fuel filter
5	Thermostat housing	10	Engine oil drain valve		

Document Title:	Function Group:	Information Type:	Date:
Engine, description	**200**	**Service Information**	**2014/4/2 0**
Profile: **CEX, ECR88 [GB]**			

Go back to Index Page

Engine, description

D3.4D Engine

The D3.4D configuration is a four stroke, straight four cylinder, direct injected, water cooled diesel engine.

The engine produces powerful performance using direct injection type combustion chamber.

The valve mechanism receives its movement from the camshaft via rods and rocker arms. Turning direction is counter-clockwise seen from the flywheel. Firing order is 1-3-4-2 and the first cylinder is on the flywheel side.

The lubrication system consists of forced lubrication with trochoid pump.
The cooling of the engine is performed by a high capacity radiator and a hydraulic oil cooler.

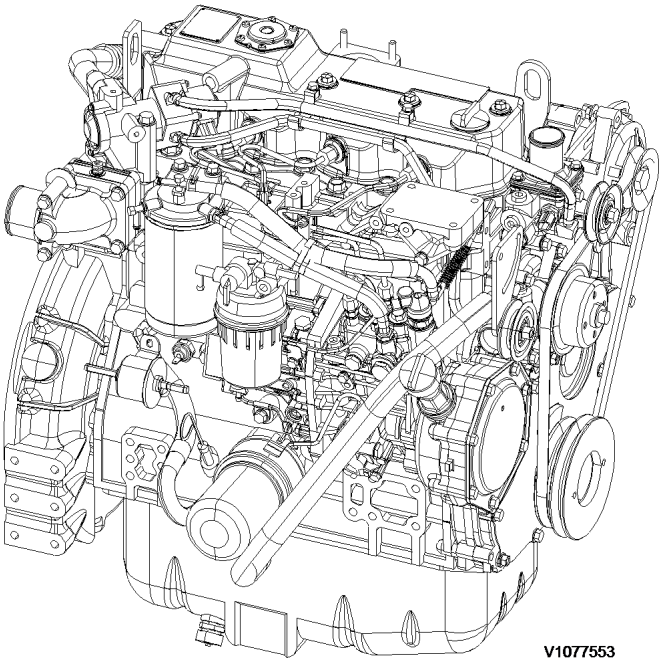

Figure 1
Engine, D3.4D

Document Title:	Function Group:	Information Type:	Date:
Engine, identification	**200**	**Service Information**	**2014/4/2 0**
Profile: **CEX, ECR88 [GB]**			

Engine, identification

Identification plate

The engine model, serial number and performance data are stamped on an identification plate which is attached on the cylinder head cover. The engine model designation and serial number must be indicated when ordering spare parts.

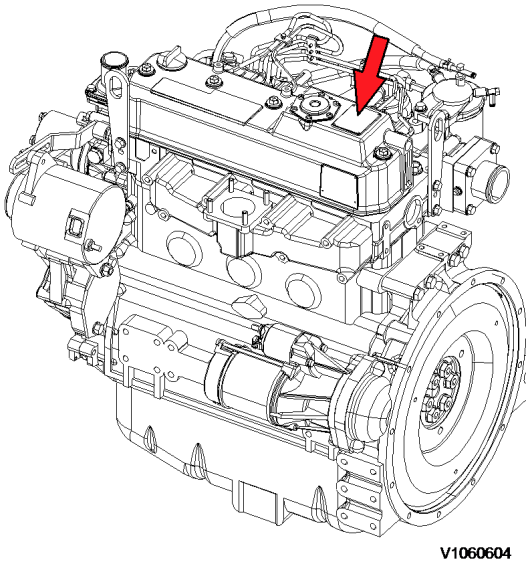

Figure 1
Engine identification

Document Title: **Engine, tightening torque**	Function Group: **200**	Information Type: **Service Information**	Date: **2014/4/2 0**
Profile: **CEX, ECR88 [GB]**			

Engine, tightening torque

Tightening torque, unit: Nm (lbf ft)

Item	**Nominal size**	**Tighten torque**	**Lubricating oil application (thread portion, and seat surface)**
Cylinder head screw	M 11 × 1.25	103.1 ~ 112.9 (76 ~ 83)	Applied
Connecting rod screw	M10 × 1.0	53.9 ~ 58.8 (40 ~ 43)	Applied
Flywheel set screw	M14 × 1.5	186.2 ~ 205.8 (137 ~ 152)	Applied
Bearing cap set screw	M 11 × 1.25	108.1 ~ 117.9 (80 ~ 87)	Applied
Crankshaft pulley set screw	M14 × 1.5	107.9 ~ 127.5 (80 ~ 94)	Applied
Fuel injection nozzle set screw	M 8 × 1.25	22.6 ~ 28.4 (17 ~ 21)	Not applied
Fuel feed pump drive gear set nut	M 18 × 1.5	113 ~ 123 (83 ~ 90)	Not applied
High-pressure fuel lines screw	M 12 × 1.5	19.6 ~ 24.5 (174 ~ 217)	Not applied
Fuel return pipe joint screw	M 6 × 1.0	7.8 ~ 9.8 (70 ~ 86)	Not applied

Tightening torque for standard screws and nuts, unit: Nm (lbf ft)

Item	**Nominal size**	**Tighten torque**	**Lubricating oil application (thread portion, and seat surface)**
Screw (7T) and nut	M 6 × 1.0	9.8 ~ 11.8 (7 ~ 9)	• Use 80% of the value at left when the tightening part is aluminium. • Use 60% of the value at left for 4T screws and lock nuts.
	M 8 × 1.25	22.6 ~ 28.4 (17 ~ 21)	
	M 10 × 1.5	44.1 ~ 53.9 (33 ~ 40)	
	M 12 × 1.75	78.4 ~ 98 (58 ~ 72)	
	M 14 × 1.5	127.5 ~ 147.1 (94 ~ 108)	
	M 16 × 1.5	215.7 ~ 235.4 (157 ~ 174)	
PT plug	1/8	9.8 (7)	
	1/4	19.6 (14)	
	3/8	29.4 (22)	
	1/2	58.5 (43)	
Pipe joint screw	M 8	12.7 ~ 16.7 (9 ~ 12)	
	M 10	19.6 ~ 25.5 (14 ~ 19)	
	M 12	24.5 ~ 34.3 (18 ~ 25)	
	M 14	39.2 ~ 49 (29 ~ 36)	
	M 16	49 ~ 58.8 (36 ~ 43)	

NOTE!
Lubricating oil is not applied to threaded portion and seat surface.

Document Title: **Precautions**	Function Group: **200**	Information Type: **Service Information**	Date: **2014/4/2 0**
Profile: **CEX, ECR88 [GB]**			

Precautions

Make preparation as follows before starting engine inspection and service.

WARNING

Risk of personal injury. Very heavy object.

Be sure to fix the engine securely to prevent injury or damage due to parts falling during the work.

WARNING

Risk of personal injury! Wear safety glasses and use protective gloves.

Always wear glasses or a protective face shield when using compressed air or steam to prevent any foreign matter from getting into the eyes.

- Fix the engine on a horizontal base.
- Remove the coolant hoses, fuel oil pipes, wire harness, control wires etc. connecting the driven machine and engine, and drain coolant, lubricating oil and fuel.
- Remove soil, oil, dust, etc. from the engine by washing with solvent, air, steam, etc. Carefully operate so as not to let any foreign matter enter the engine.
- Any part which is found defective as a result of inspection or any part whose measured value does not satisfy the standard or limit shall be replaced.
- Any part predicted to dissatisfy the standard or limit before the next service as estimated from the state of use should be replaced even when the measured value then satisfies the standard or limit.

Document Title:	Function Group:	Information Type:	Date:
Periodic inspection and maintenance procedure	**200**	**Service Information**	**2014/4/2 0**
Profile: **CEX, ECR88 [GB]**			

Periodic inspection and maintenance procedure

Check before daily operation

Be sure to check the following points before starting the engine every day.

If any problem is found, do not use the machine before the engine repairs have been completed.

- Oil leak from the lubrication system
- Fuel leak from the fuel system
- Coolant leak from the cooling system
- Damaged parts
- Loosened or lost screws
- Fuel, radiator rubber hoses cracked, loosened clamp

Thermostat and Thermal Switch Inspection

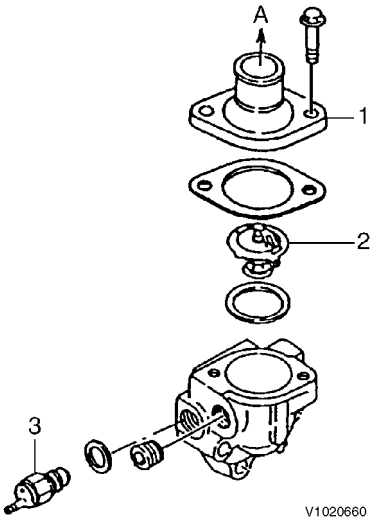

Figure 1
Thermostat

1. Cover
2. Thermostat
3. Thermostat switch

A. To radiator

1. Thermostat
   Place the thermostat in a container filled with water.
   Heat it while measuring the water temperature, and see that the thermostat is actuated at the temperature of following table.

Valve opening temperature, °C (°F)	Full open lift, mm (°C, °F)
69.5 ~ 72.5 (157.1 ~ 162.5)	8 mm or more (85 °C, 185 °F)

NOTE!
Valve opening temperature is scribed on the flange.

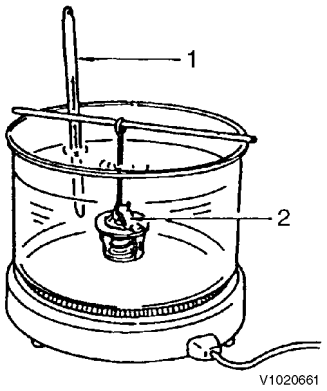

Figure 2
Thermostat inspection

1. Thermometer
2. Thermostat

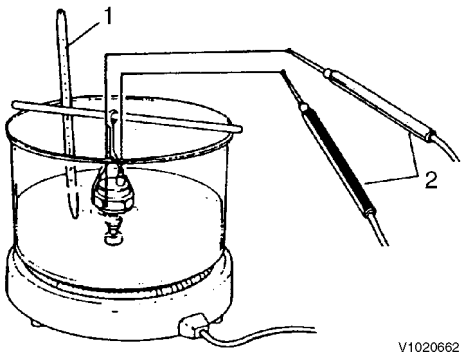

Figure 3
Thermostat switch inspection

1. Thermometer
2. Tester probes

2. Thermostat switch
   Place the thermostat switch in a container filled with antifreeze or oil. Heat it while measuring the fluid temperature. The switch is normal if the multi-meter shows continuity when the fluid temperature is 107 ~ 113 °C (225 ~ 235 °F).

- Inspection and replacement of fuel pipe and cooling pipes/hoses.
  - Regularly check the rubber hoses of the fuel system and cooling system. If cracked or degraded, replace them with new ones. Replace the rubber hoses at least every 2 years.
- Lapping the intake and exhaust valves
  - The adjustment is necessary to maintain proper contact of the valves and seats.
- Fuel injection timing inspection and adjustment

Sensor inspection

- Oil pressure switch
  Disconnect the connector from the oil pressure switch. Keep the multi-meter probes in contact with the switch terminal and cylinder block while operating the engine. If is abnormal if circuit is closed.
- Thermostat switch

Coolant leak check in cooling system

- Check coolant leakage from the cooling system visually. If any problem is found, Inspect as follows :

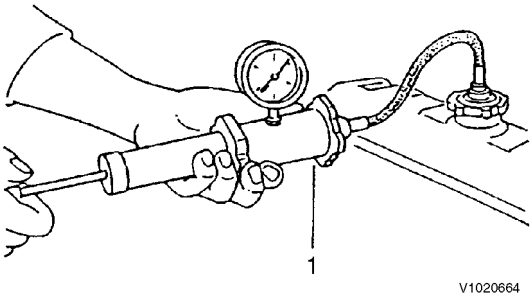

Figure 5
Water leak check in coolant system

1. Cap tester

- Fill coolant to the normal level in the radiator, and install the cap tester on the radiator.
- Operate the manual pump to set the pressure to 0.9 ± 0.15 kgf/cm2(12.8 ± 2.1 psi). If the cap tester pressure gage reading drops then, coolant is leaking from the cooling system. Check and repair the coolant leaking point.

Radiator cap inspection

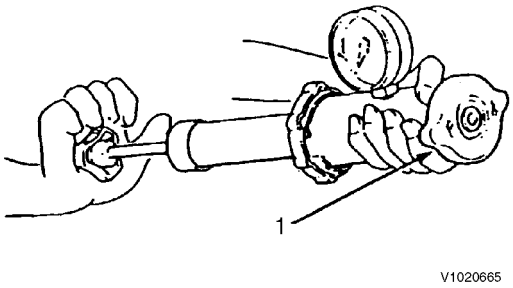

Figure 6
Radiator cap inspection

1. Radiator cap

- Install the radiator cap on the cap tester. Set the tester pressure to 0.9 ± 0.15 kgf/cm2(12.8 ± 2.1 psi) and check that the cap relief valve is opened. If the relief valve does not open, replace the cap since it is abnormal.

Document Title: **Component locations**	Function Group: **200**	Information Type: **Service Information**	Date: **2014/4/2 0**
Profile: **CEX, ECR88 [GB]**			

Component locations

Component position, engine D3.4D. The following figures show the position of a number of components on engine D3.4D.

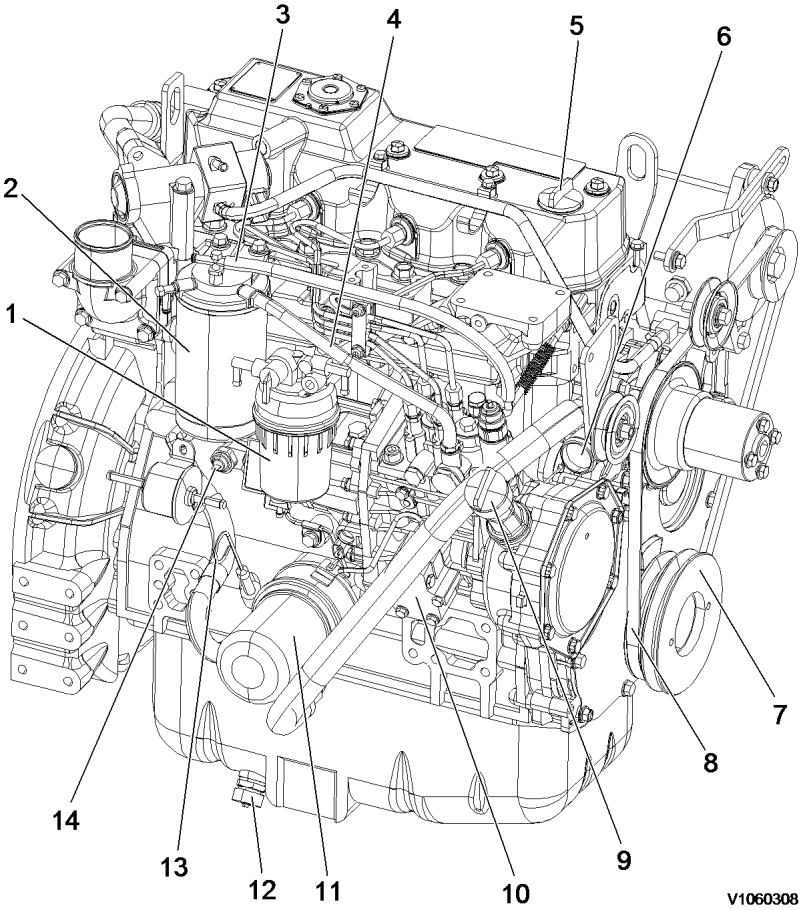

Figure 1
Component locations, front side

1	Water separator	8	V-belt
2	Fuel filter	9	Side filler port (engine oil)
3	Fuel return line	10	Fuel injection pump
4	Fuel supply line	11	Engine oil filter
5	Top filler port (engine oil)	12	Engine oil drain plug
6	Engine coolant pump	13	Engine oil dipstick
7	Crankshaft V-pulley	14	Oil pressure switch

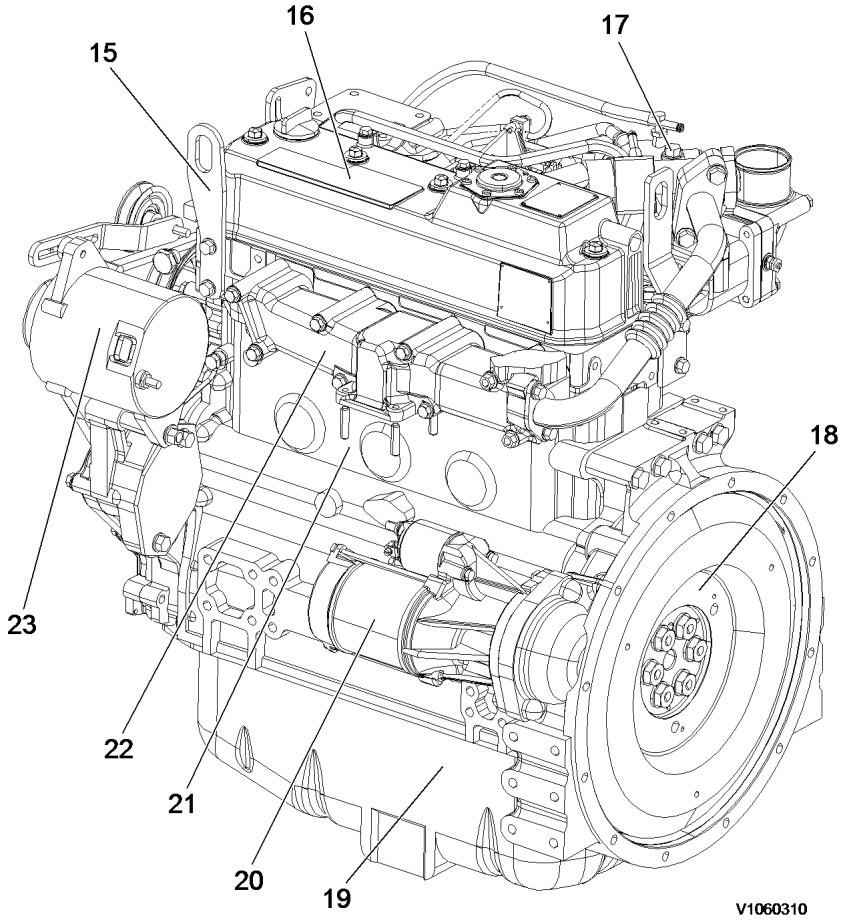

Figure 2
Component locations, flywheel side

15	Lifting bracket (engine cooling fan end	20	Starter motor
16	Rocker arm cover	21	Cylinder block
17	EGR vavle	22	Exhaust manifold
18	Flywheel	23	Alternator
19	Oil pan		

Document Title: **Compression pressure inspection**	Function Group: **210**	Information Type: **Service Information**	Date: **2014/4/2 0**
Profile: **CEX, ECR88 [GB]**			

Compression pressure inspection

Compression pressure drop is one of major causes of increasing blow-by gas (lubricating oil contamination or increased lubricating oil consumption as a resultant phenomenon) or starting failure. The compression pressure is affected by the following factors:

1. Degree of clearance between piston and cylinder
2. Degree of clearance at intake/exhaust valve seat
3. Gas leak from nozzle gasket or cylinder head gasket

In other words, the pressure drops due to increased parts wear and reduced durability resulting from long use of the engine. A pressure drop may also be caused by scratched cylinder or piston by dust entrance from the dirty air cleaner element or worn or broken piston ring. Measure the compression pressure to diagnose presence of any abnormality in the engine.

Compression pressure measurement method

1. After warming up the engine, remove the fuel injection nozzle from the cylinder to be measured.

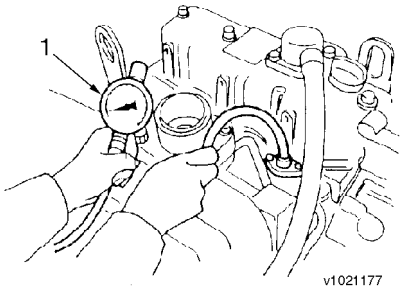

Figure 1
Measuring the compression pressure

1. Compression gauge

2. Crank the engine before installing the compression gauge adapter.
   - Perform cranking with the stop handle at the stop position (no injection state).
3. Install the compression gauge and compression gauge adapter at the cylinder to be measured.
   NOTE!
   Do not forget to install a gasket at the tip end of the adapter.
4. Crank the engine by the starting motor until the compression gage reading is stabilized.

Standard compression pressure

- Standard: 3.43 ±0.098 MPa (35 ±1 kgf/cm2) (498 ±14 psi) (34.32 ±0.98 bar)
- Limit: 2.74 MPa (28 kgf/cm2) (398 psi) (27.4 bar)
- Dispersion among cylinders: 0.19 ~ 0.29 MPa (2 ~ 3 kgf/cm2) (28 ~ 43 psi) (1.96 ~ 2.94 bar)

Engine speed and compression pressure

Buy Now

Our support email:

ebooklibonline@outlook.com