Document Title: **Engine, description**	Function Group: **200**	Information Type: **Service Information**	Date: **2014/3/10**
Profile: **CWL, L30B [GB]**			

Engine, description

Machines with **SN 1822001 – / – 1822999; SN 1832001 – / – 1832999 and SN 1852001 – / – 1852999** are equipped with the DEUTZ-BF4L 1011 FT engine.

Machines with **SN 1823000 – / – 1826000; SN 1833000 – / – 1836000 and SN 1853000 – / – 1856000** are equipped with the VOLVO D3D engine.
Both engines are four cylinder, four stroke, in-line direct-injected diesel engines, with exhaust turbo and oil/air cooling.

Machines **fromSN 1826001 – ; SN 1836001 – and SN 1856001 –** are equipped with the VOLVO D3.6D engine.
The engine is a four-cylinder, four-stroke, in-line diesel engine with direct injection, exhaust turbocharger, oil/air cooling and internal, unregulated exhaust gas recirculation (EGR).

In order to comply with emission limits, the turbo engine is equipped with an **internal, unregulated exhaust gas recirculation system IEGR (Internal Exhaust Gas Recirculation)**, which directs the exhaust gas within the cylinder head back into the combustion air. The oxygen content of this exhaust gas is low, which serves to lower the peak combustion temperature, thereby reducing generation of nitrogen oxides (NO_x).

The camshaft has an extra cam - the trailing cam. This causes the inlet valve to briefly open during the exhaust stroke so that exhaust gas also enters the engine intake system. In the subsequent induction stroke, this exhaust is sucked back in. There is no regulation of exhaust gas quantity.

Engine data plate

The engine data plate specifies model, engine number and power data. The engine number is also stamped into the crankcase. Model and engine number must be specified when ordering spare parts. The direction of rotation is found on the flywheel, anticlockwise. Firing order: 1-3-4-2 (cylinder no. 1 on the flywheel side).

IMPORTANT! Adjustments to the regulator may only be performed by trained staff in an authorized central repair workshop.

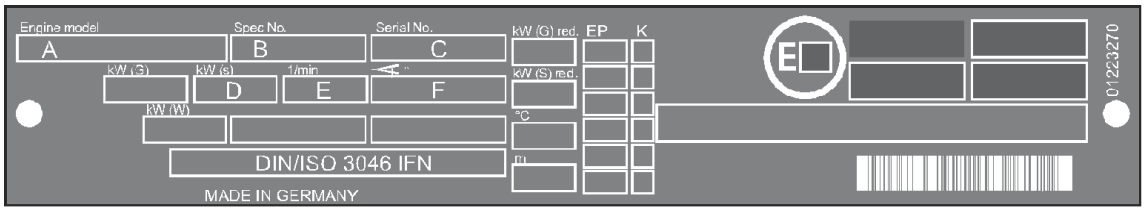

V1044195

Figure 1
Engine data plate up to SN

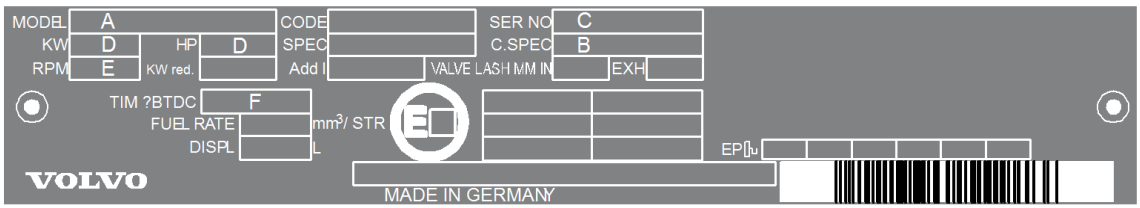

V1044234

Figure 2
Engine data plate from SN

A. Engine type
B. Spare part number

C. Engine number
D. Capacity
E. Rated speed
F. Timing setting

Components, servicing view

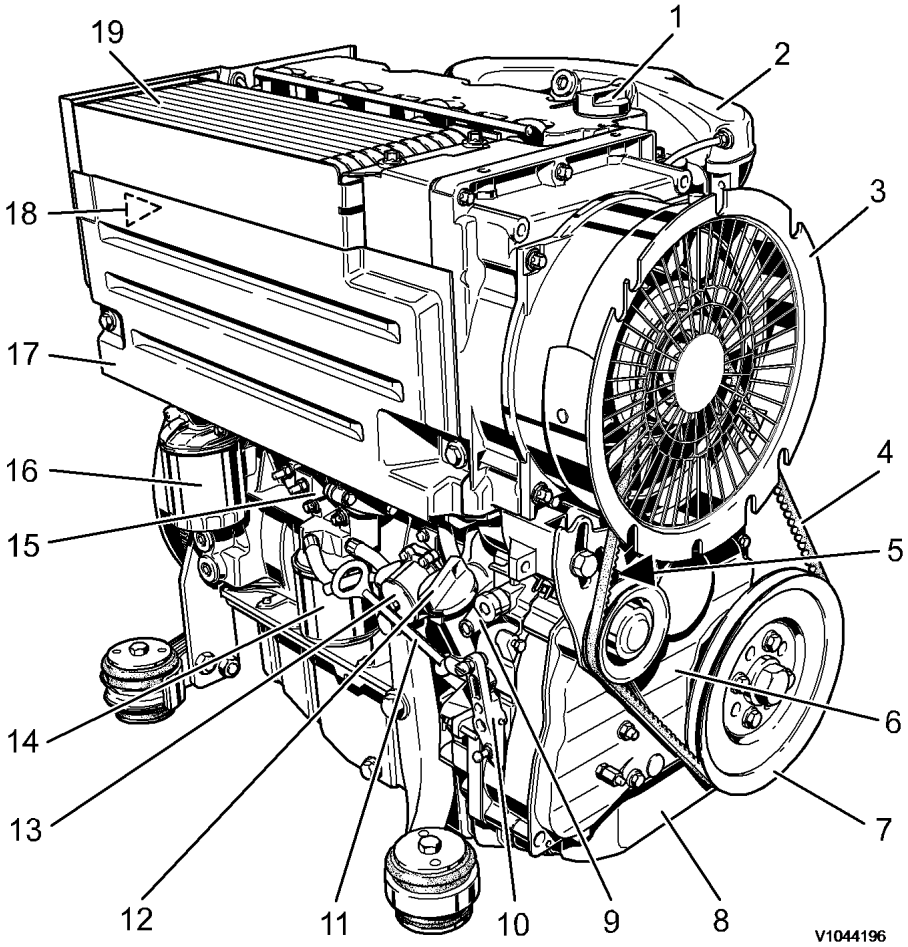

Figure 3
Components, servicing view

1. Oil filler port (valve cover)
2. Charge air line / Suction pipe
3. Fan with integrated alternator
4. V-rib belt
5. Engine stop solenoid
6. Gear housing cover, timing belt cover
7. V-belt roller, crankshaft
8. Oil sump
9. Start/stop lever
10. Engine speed adjustment
11. Oil dipstick
12. Oil filler pipe
13. Fuel pump
14. Fuel filter
15. Boost pressure full-load stop
16. Oil filter
17. Cooling air baffle
18. Injection pumps
19. Oil cooler

Components, exhaust view

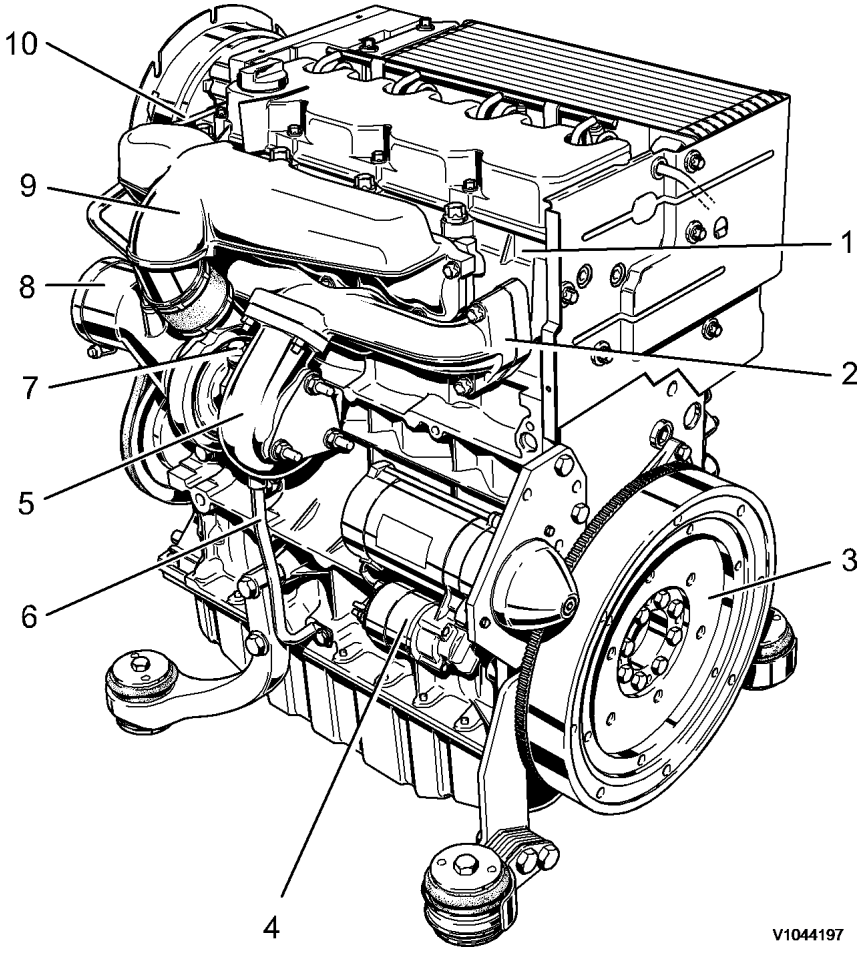

Figure 4
Components, exhaust view

1. Cylinder head
2. Exhaust manifold
3. Flywheel
4. Starter
5. Turbocharger
6. Lubrication oil line from exhaust turbocharger
7. Lubrication oil line to exhaust turbocharger
8. Inlet port
9. Induction manifold
10. Charge air measurement connection

Document Title: **Engine, removing**	Function Group: **210**	Information Type: **Service Information**	Date: **2014/3/10**
Profile: **CWL, L30B [GB]**			

Engine, removing

Op nbr 210-070

9998547 Lifting tool

Lifting eye, x2 M12

1. Place the machine in service position.
2. Switch off the battery connection switch.

WARNING

The work involves handling heavy components - failure to stay alert may result in severe crushing injuries.

Remove the engine hood.

3. Open the engine hood and unscrew the fixing bolts.
4. Lift off the engine hood and place it on a suitable surface.
5. Release clamp (1) on air filter intake hose and pull hose off air filter.

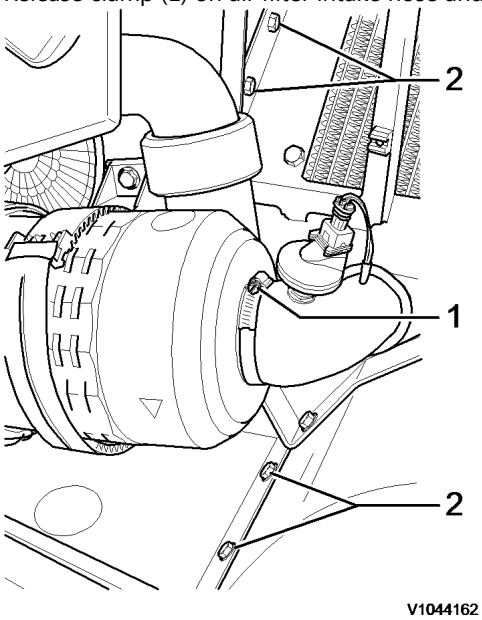

Figure 1

6. Remove screw (2) from side bulkhead and remove complete with air filter.

Remove rear counterweight.

7. Disconnect the pin plug connection of the tail lights.

8. Suspend the counterweight from a crane using suitable hoisting equipment.

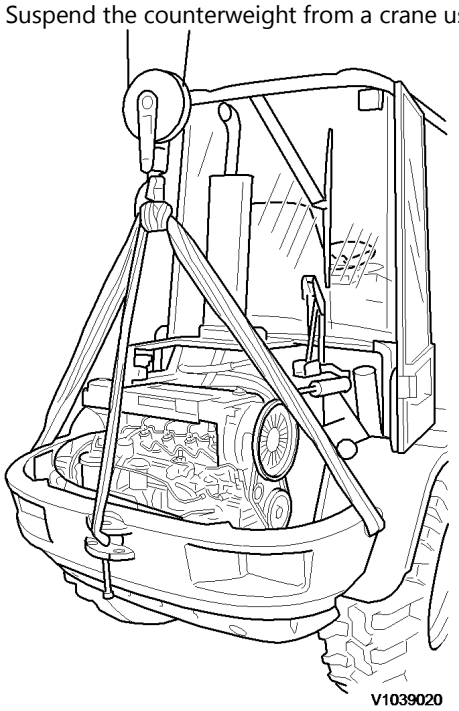

Figure 2

9. Remove the counterweight retaining bracket (arrows).

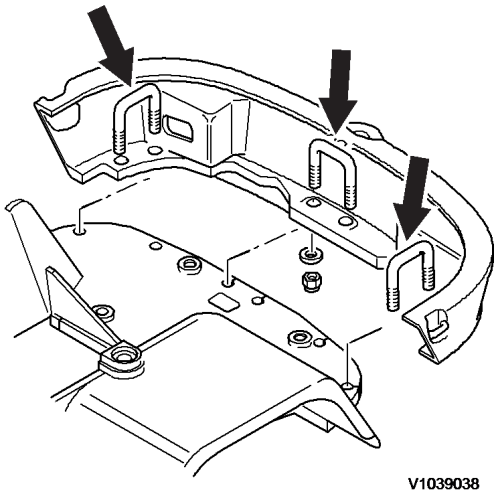

Figure 3

10. Slowly raise the counterweight and remove towards the rear.
    NOTE!
    Lower the counterweight onto a suitable surface.

11. Suspend the hydraulic variable displacement pump from a crane using suitable hoisting equipment.

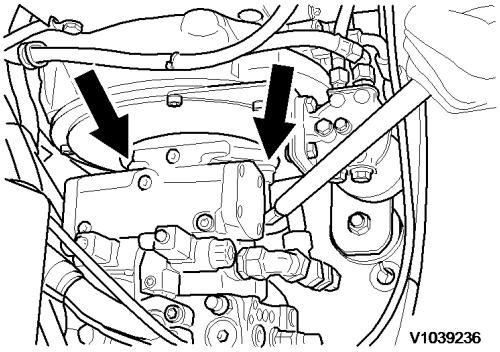

Figure 4

12. Unscrew the fixing bolts (arrows) of the hydraulic variable displacement pump. Pull the pump rearwards out of the connection flange and set it on the frame plate.

13. Remove air duct cover

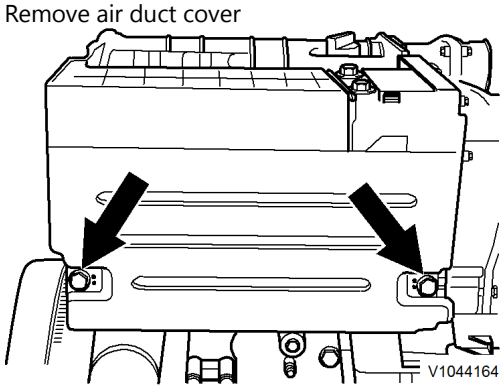

Figure 5

14. Undo the hose clamp with clamping tongs and detach the fuel return hose (1).

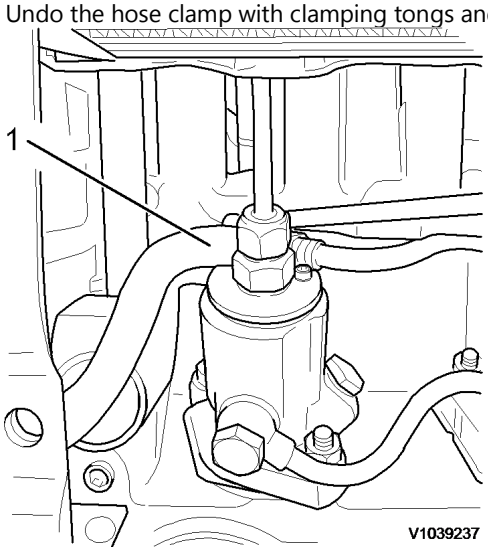

Figure 6

NOTICE

When a hose has been disconnected, plug both the hose and the connection immediately. The hoses should be marked for correct connection.

15. Detach the fuel lines (1) and (2) at the fuel filter/water separator.

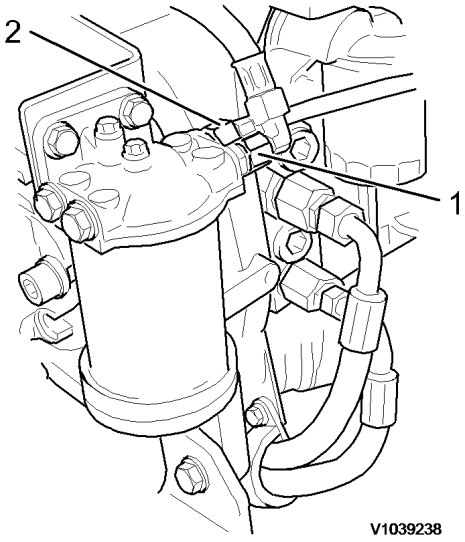

Figure 7

16. Remove heater connections (1) and (2) with clamp (3).

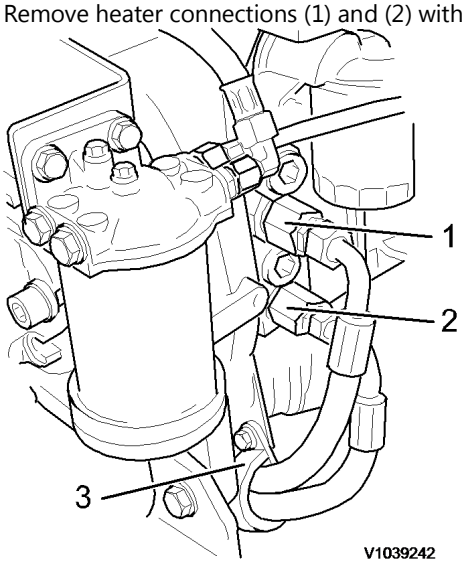

Figure 8

NOTE!
Mark supply and return.

17. Detach the throttle cable from the engine. Unscrew the bracket (1) and slacken the jam nuts (2).

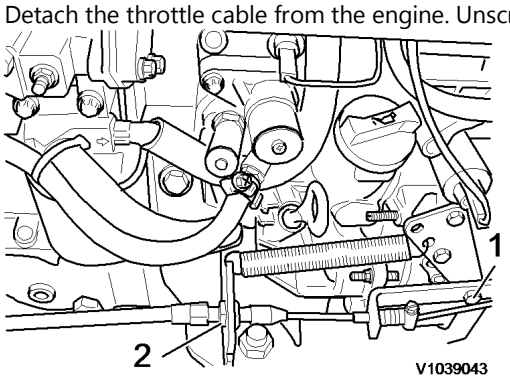

Figure 9

18. Remove ground connection at engine block.

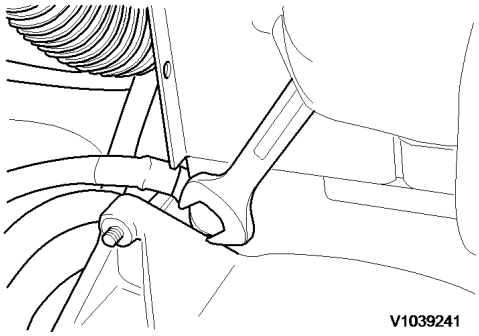

Figure 10

19. Detach preheating connection cable.

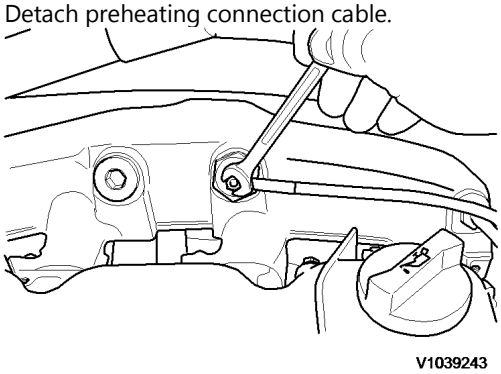

Figure 11

20. Disconnect charging current line (B+) to starter.

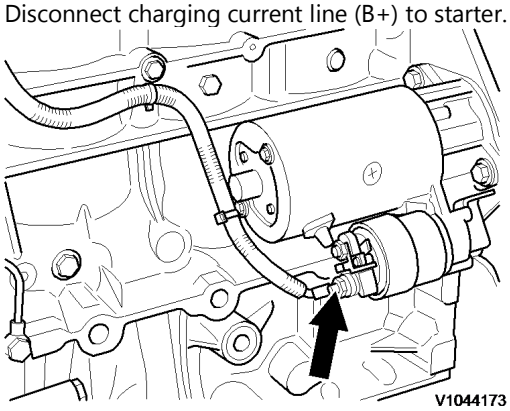

Figure 12

21. Disconnect the X26 electric pin plug connection.

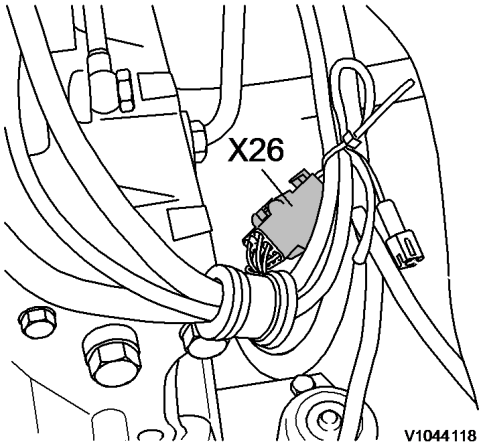

Figure 13

NOTE!
The engine plug X26 is on the starter side near the fan rotor

22. Remove the flexi exhaust pipe from the turbocharger at the silencer.

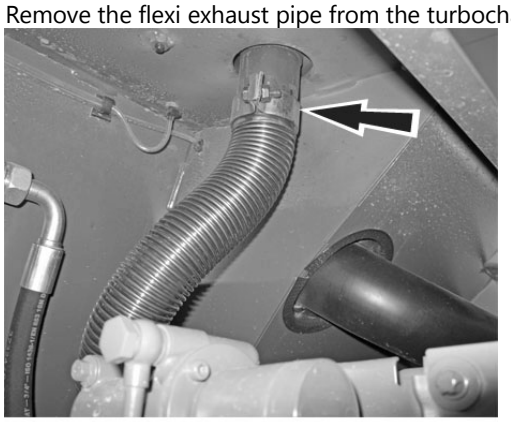

Figure 14

23. Screw in the lifting eyes and suspend the engine from the crane using the lifting yoke.

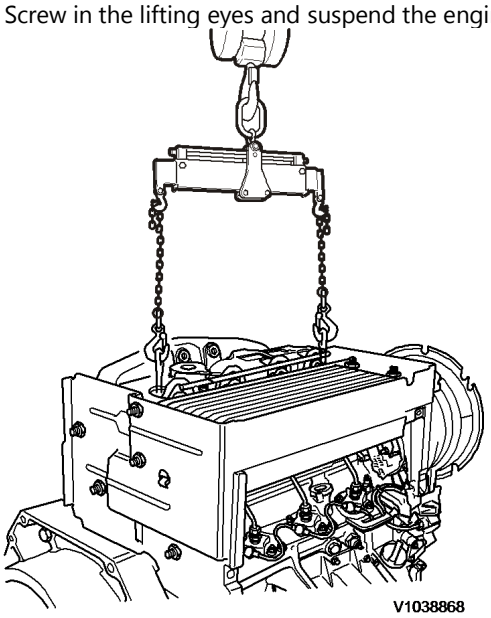

Figure 15

24. Remove engine bracket fixing bolts at frame.

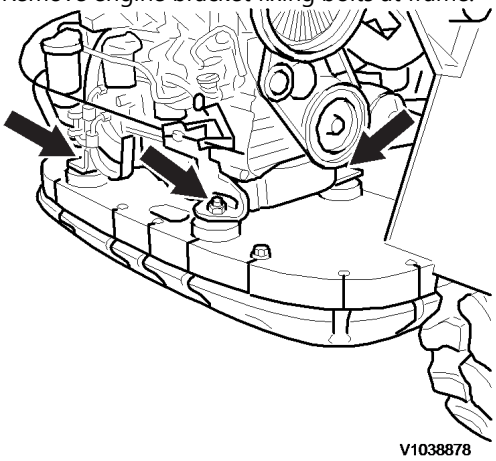

Figure 16

25. Slowly out the engine and place it on a suitable surface.

Document Title:	Function Group:	Information Type:	Date:
Engine, installing	**210**	**Service Information**	**2014/3/10**
Profile: **CWL, L30B [GB]**			

Engine, installing

Op nbr 210-072

9998547 Lifting tool

Lifting eye, x2 M12

WARNING

The work involves handling heavy components - failure to stay alert may result in severe crushing injuries.

1. Screw in the lifting eyes and suspend the engine from the crane using the lifting yoke.

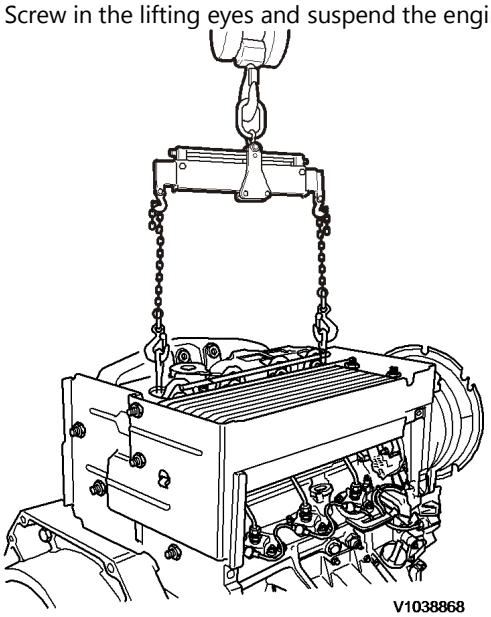

Figure 1

2. Slowly lower the engine into the engine bay and position on the engine mounts.

NOTICE

Make sure that no hoses or cables are trapped.

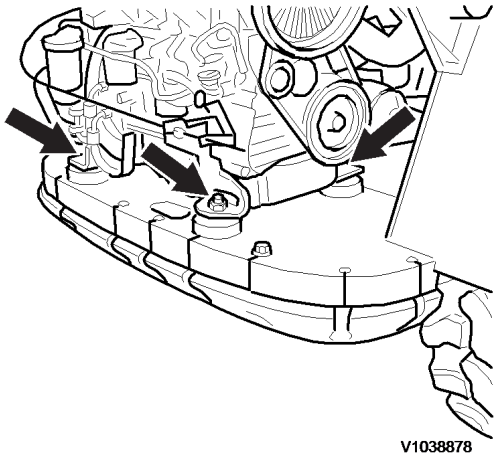

Figure 2

3. Tighten the engine bracket fixing bolts to the frame. Tightening torque **200 Nm (148 lbf ft)**.

4. Unhook the lifting yoke and unscrew the lifting eyes.

5. Fit the flexi exhaust pipe to the turbocharger at the silencer.

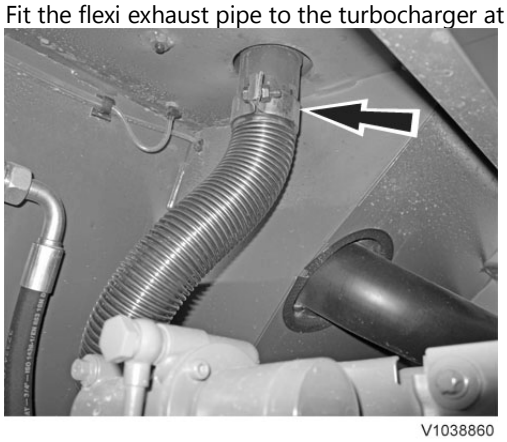

Figure 3

6. Connect the X26 electric pin plug connection.

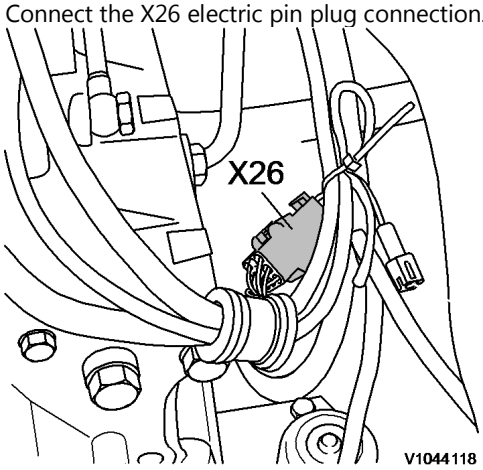

Figure 4

NOTE!
The engine plug X26 is on the starter side near the fan rotor

7. Connect the charging current line (B+) to the starter. Tightening torque **15 Nm (11 lbf ft)**.

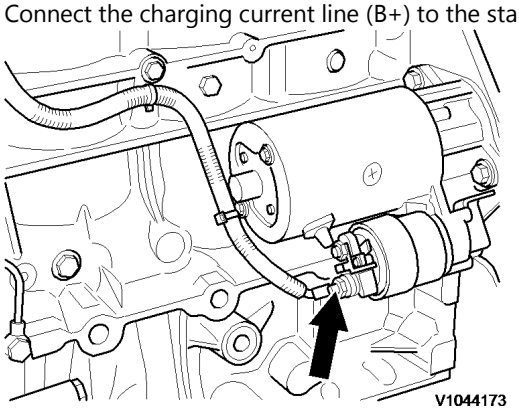

Figure 5

8. Attach preheating connection cable.

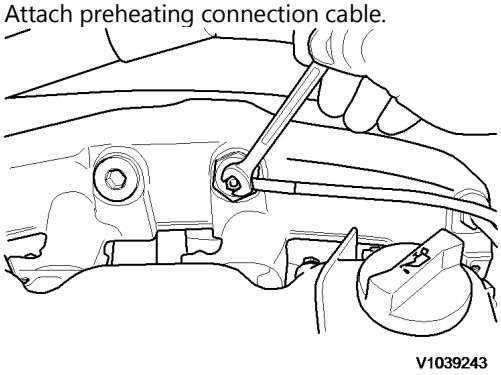

Figure 6

9. Install ground connection at engine block.

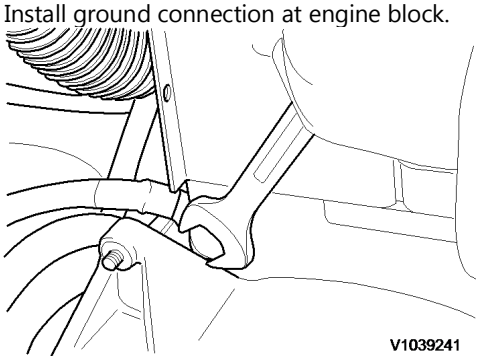

Figure 7

10. Attach throttle cable to the engine. Fasten the bracket (1) and slacken approximately one turn. Tighten the jam nuts (2).