Document Title:	Function Group:	Information Type:	Date:
Description	**200**	**Service Information**	**2014/5/22**
Profile:			

Description

L90C is equipped with an engine with the designation TD63KBE.
L120C is equipped with an engine with the designation TD73KDE.
Both engines are six-cylinder, four-stroke, direct injected, turbocharged diesel engines and both are of the low-emission version.

Document Title:	Function Group:	Information Type:	Date:
Engine, installing	**210**	**Service Information**	**2014/5/22**
Profile:			

Engine, installing

Op nbr 21072

Lifting sling, 3 m (10 ft)
Shackle 3/8"
Ratchet block, 750 kg (1653 lb)

1. Connect a lifting device to the engine according to [Invalid linktarget] .
   Weight: **approx. 750 kg (1653 lb)**

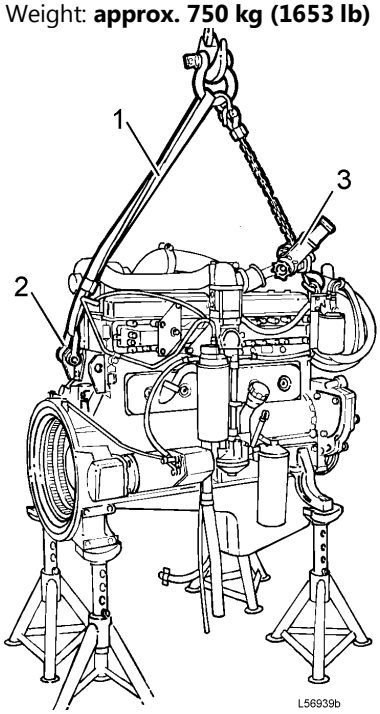

Figure 1
Connecting lifting device

1. Lifting sling, 3 m (10 ft)
2. Shackle 3/8"
3. Ratchet block 750 kg (1653 lb)

2. Lift the engine into the machine.
   NOTE!
   Make sure that the hoses for the air conditioning (if installed) are not damaged.

3. Align the engine against the transmission and install the bolts.
   Tightening torque: **85 ±8 N m (63 ±6 lbf ft)**
   Remove any supports from under the transmission.

4. Install the bolts between the engine mountings and the rubber elements.
   Tightening torque: **220 ±22 N m (162 ±16 lbf ft)**

5. Bolt the transmission oil cooler onto the bracket on the engine.

6. Install the hub for the fan belt pulley, bracket and tensioning pulley.

7. Bolt on the compressor (if installed) for the air conditioning and install its drive belt and the fan belts.

8. Install the stays between the engine and the air-guide ring.

9. Install the fan.

10. Install the coolant pipe between the coolant pump and the transmission oil cooler, replace the O-ring.
    Connect the expansion tank and the climate control system hose to the pipe and the coolant filter (if installed) hose.

11. Bolt the fuel system water trap onto the bracket on the frame. Connect the fuel lines to the feed pump and the injection pump.

12. Connect the cable harness to B+ on the alternator, connector BB to the stop solenoid and SE1 to the temperature sensor.
    Clamp the cable harness with the screw clips.

13. Connect the accelerator control to the injection pump.

14. Bolt the preheating element relay bracket and bracket for air conditioning receiver drier (if installed) onto the bracket on the engine inlet pipe. Connect the lead to the preheating element.

15. Connect the ground lead to the starter motor (black terminal).
    Connect the red leads of the cable harnesses to the starter motor (red terminal).

16. Connect the leads to the oil pressure sensor and to the air cleaner indicator and clamp the cable harness with the screw clips.

17. Install the upper radiator hose.

18. Install the breather filter and bolt on the pump for the secondary steering (if installed).

19. Lift the hood assembly into position, see [Invalid linktarget] .
    Weight: **approx. 100 kg (220 lb)**

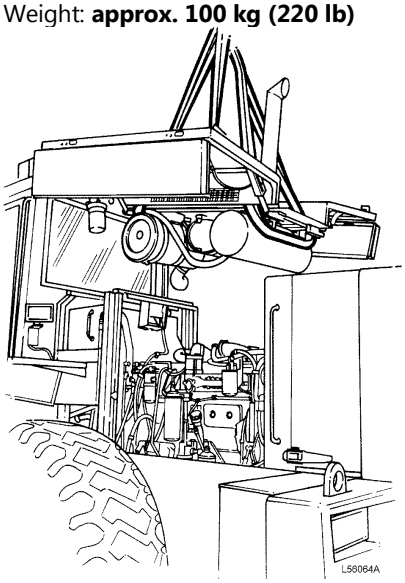

Figure 2
Installing hood assembly

20. Connect the following:

- The exhaust pipe to the silencer.
- The hoses, 3 pcs, to the expansion tank.
- The hose to the hydraulic tank breather filter.
- The inlet hose to the turbocharger.
- The hose to the air cleaner indicator.

21. Install the hood plates on both sides of the hydraulic tank and the cover on top.

22. Fill with coolant.
    Capacity: **53 litres (14 US gal)**
    Fill engine oil.
    Capacity: **16 litres (4.2 US gal)**

23. Remove the frame joint lock. Start the engine and check that there are no leaks.

Document Title:	Function Group:	Information Type:	Date:
Engine, removing	**210**	**Service Information**	**2014/5/22**
Profile:			

Engine, removing

Op nbr 21070

Lifting sling, 3 m (10 ft)
Shackle 3/8"
Ratchet block, 750 kg (1653 lb)

1. Secure the frame joint with the frame joint lock.

2. Turn off the battery disconnect switch.

3. **WARNING**
   There is a danger of scalding when removing the expansion tank cap (radiator cap), as the cooling system is pressurised when hot.

   Remove the cap for the expansion tank and drain the coolant.
   Capacity: **53 litres (14 US gal)**
   Drain the engine oil.
   Capacity: **16 litres (4.2 US gal)**

4. Remove the cover above the hydraulic tank and the hood plates on both sides of the tank.

5. Disconnect the following:

   - The exhaust pipe from the silencer.
   - The hoses from the expansion tank, 3 pcs.
   - The hose from the hydraulic tank breather filter.
   - The inlet hose from the turbocharger.
   - The hose from air cleaner indicator.

6. Lift away the hood plate above the engine and the side covers as one unit together with the silencer, the air cleaner and the expansion tank, see [Invalid linktarget] .
   Weight: **approx. 100 kg (220 lb)**

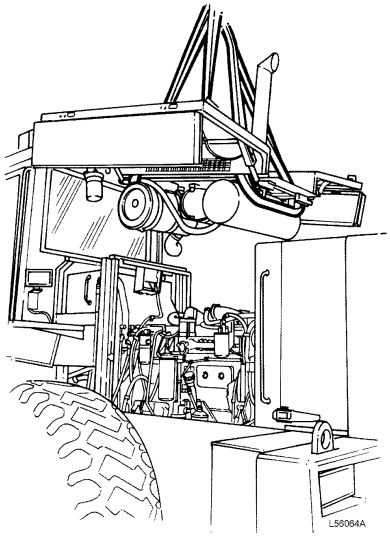

Figure 1
Removing hood plate

7. Open the side covers on both sides of the hydraulic tank and remove the lower cover plates.

8. Disconnect the accelerator control from the injection pump.

9. Disconnect the required electrical cables and clamps from:

   - the starter motor
   - the preheating element
   - the alternator
   - the temperature sensor
   - the oil pressure sensor and the stop solenoid.

10. Detach the preheating element relay bracket and the bracket for the air conditioning receiver drier, if applicable, from the bracket by the engine inlet manifold.
    Lay the receiver drier on the frame but without disconnecting the hoses.

11. **WARNING**
    Do not disconnect hoses for the air conditioning (if installed), as the gas will then leak out.

    Detach the air conditioning compressor (if installed) complete with bracket and hoses and place it on the fuel tank.

12. Detach the bracket for the engine oil and coolant draining hoses.
    Disconnect the fuel lines from the injection pump and the feed pump.
    Detach the water trap and place it on the frame.

13. Swing out the radiator and condenser (if installed). Remove the fan.
    Remove the attaching stays, 3 pcs, for the air-guide ring.
    Remove the fan belts.

14. Remove the fan belt pulley complete with hub, bracket and tensioning pulley, see [Invalid linktarget] .

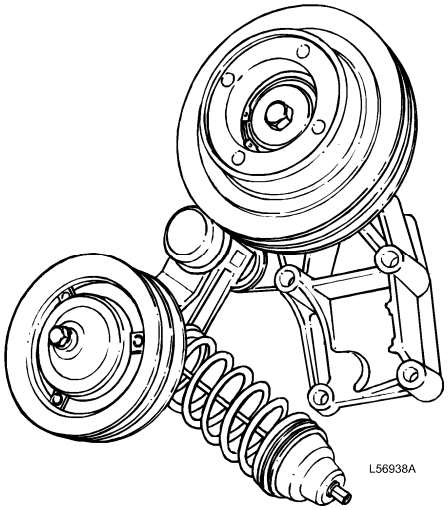

Figure 2
Fan belt pulley complete with hub, bracket and tensioning pulley

15. Remove the axle breather filter and detach the secondary steering pump (if installed).

16. Detach the electrical lead for the air cleaner indicator from the tank.

17. Connect a lifting device to the engine, see [Invalid linktarget] .
    Remove the bolts between the engine mountings and the rubber elements.
    Remove the bolts between the engine and the transmission.

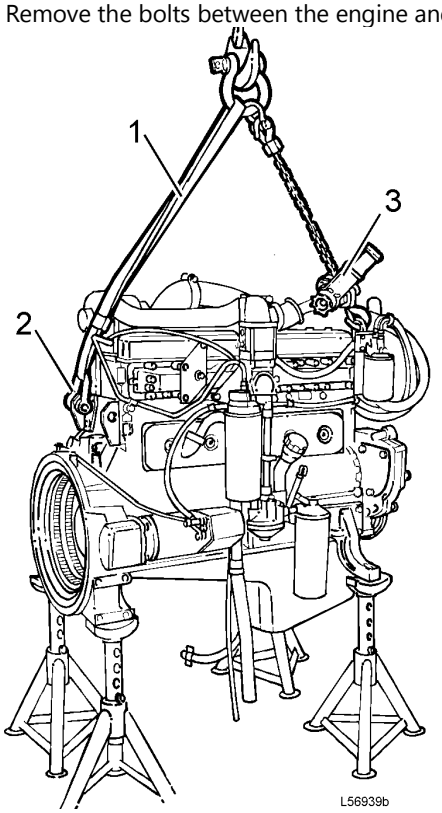

Figure 3
Connecting lifting device

1. Lifting sling, 3 m (10 ft)
2. Shackle 3/8"
3. Ratchet block 750 kg (1653 lb)

18. Block up the transmission against the front rear axle suspension, see [Invalid linktarget] .

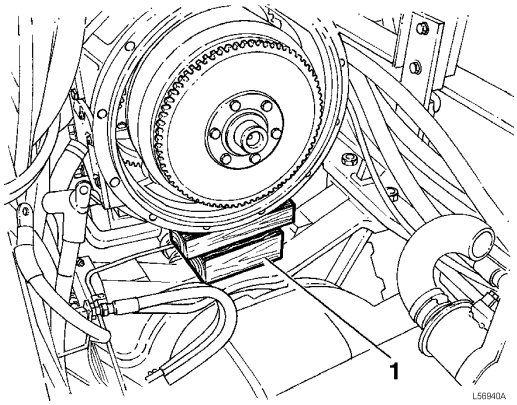

Figure 4
Blocking up transmission

1. Wooden blocks

19. Lift away the engine, see [Invalid linktarget] .
    Weight: **approx. 750 kg (1653 lb)**

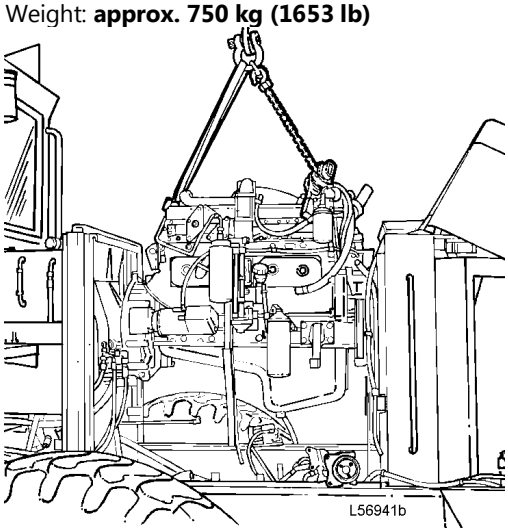

Figure 5
Lifting out engine

Document Title:	Function Group:	Information Type:	Date:
Specifications, capacities	**210**	**Service Information**	**2014/5/22**
Profile:			

Specifications, capacities

Engine, when changing oil incl. filter(s)	16 dm^3 (litres) (4.2 US gal)

Document Title:	Function Group:	Information Type:	Date:
Specifications, general	**210**	**Service Information**	**2014/5/22**
Profile:			

Specifications, general

Engine	
Type designation	TD63KBE, part No. 8188100
Flywheel output at 35 r/s (2100 rpm)	113 kW (154 hp) SAE J 1349 Net 113 kW (154 hp) DIN 70020
Output gross at 35 r/s (2100 rpm)	118 kW (162 hp) SAE J 1349 Gross
Torque max. at 18.3 r/s (1100 rpm)	690 N m (509 lbf ft) SAE J 1349 Net 695 N m (513 lbf ft) SAE J 1349 Gross 690 N m (509 lbf ft) DIN 70020
Number of cylinders	6
Cylinder bore	98.43 mm (3.937 in)
Stroke	120 mm (4.78 in)
Cylinder capacity, total	5.48 dm^3 (litres) (334 in3)
Compression ratio	18.3 : 1
Compression pressure at starter motor revolutions, 3.3 r/s (200 rpm)	2.4 MPa (24 bar) (348 psi)
Max. permissible pressure difference between the cylinders at starter motor revolutions	0.3 MPa (3 bar) (44 psi)
Order of injection	1-5-3-6-2-4
Idling speed, low (serial No. –14314)	11.2 ±0.5 r/s (670 ±30 rpm) (435 ±20 Hz)
Idling speed, low (serial No. 14315–)	11.2 ±0.8 r/s (670 ±50 rpm) (438 ±30 Hz)
Idling speed, high (serial No. –14314)	39.7 ±1.0 r/s (2380 ±60 rpm) (1546 ±40 Hz)
Idling speed, high (serial No. 14315–)	40.3 ±1.0 r/s (2420 ±60 rpm) (1574 ±40 Hz)
Stall speed with torque converter (serial No. –14314)	35 ±1.25 r/s (2100 ±75 rpm) (1365 ±50 Hz)
Stall speed with torque converter (serial No. 14315–)	36.5 ±1.3 r/s (2190 ±75 rpm) (1425 ±50 Hz)
Stall speed with torque converter + working hydraulics (serial No. –14314)	26.5 ±1.7 r/s (1600 ±100 rpm) (1040 ±65 Hz)
Stall speed with torque converter + working hydraulics (serial No. 14315–)	26.7 ±1.7 r/s (1600 ±100 rpm) (1043 ±65 Hz)

Document Title:	Function Group:	Information Type:	Date:
Valves, adjusting	**214**	**Service Information**	**2014/5/22**
Profile:			

Valves, adjusting

Op nbr

999 3590 Gear

NOTE!
Clean around valve covers before beginning the adjustment.

1. Remove valve covers.

2. Rotate the crankshaft with gear 999 3590, see [Invalid linktarget] .

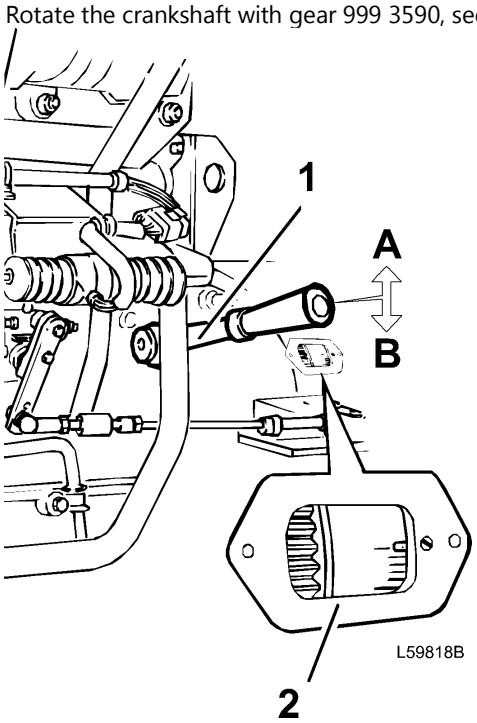

Figure 1

1	999 3590 (with ratchet handle)
2	Flywheel marking, L90C On L120C the flywheel marking can be found under the cover next to the flywheel ring gear.
A	Direction of rotation

3. Rotate the flywheel in the direction of rotation of the engine until the piston in the number 1 cylinder is at T.D.C. (0° on the flywheel and the valves of the number 6 cylinder “are rocking”).
   Adjust the valves 1, 2, 3, 6, 7 and 10, see [Invalid linktarget] and [Invalid linktarget] .

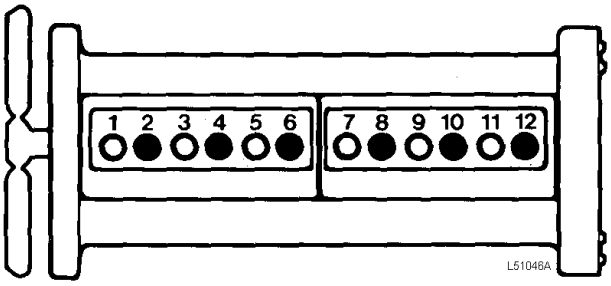

Figure 2
Valve clearance (warm and cold engine)

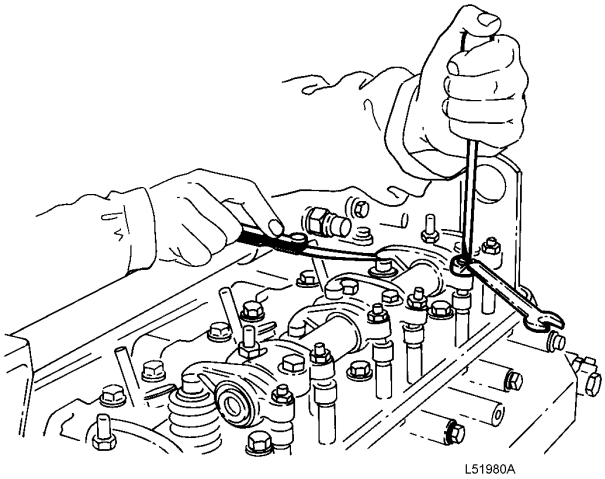

Figure 3
Valve adjustment

4. Rotate the flywheel one further turn in the direction of rotation of the engine (0° on the flywheel and the valves of the number 1 cylinder "are rocking").
   Adjust the valves 4, 5, 8, 9, 11 and 12, see [Invalid linktarget] and [Invalid linktarget] .

5. Install valve covers together with new seals.

Document Title:	Function Group:	Information Type:	Date:
Specifications, general	**220**	**Service Information**	**2014/5/22**
Profile:			

Specifications, general

L90C

Lubrication system	
Oil pressure	395 – 545 kPa (3.95 – 5.45 bar) (57 – 79 psi)
Oil pressure minimum, idling	130 kPa (1.3 bar) (19 psi)
Relief valve[1] ⓘ “blue”, opening pressure	470 kPa (4.7 bar) (68 psi)
Piston cooling valve[2] ⓘ “red”, opening pressure	240 kPa (2.4 bar) (35 psi)

[1]The valve is in one piece and cannot be taken apart. Valve marked “blue” is positioned nearest to the cylinder block.

[2]The valve is in one piece and cannot be taken apart.

Document Title:	Function Group:	Information Type:	Date:
Specifications, tightening torques	**220**	**Service Information**	**2014/5/22**
Profile:			

Specifications, tightening torques

	N m	kgf m	lbf ft
Oil sump	24	2.4	18

Buy Now

Our support email:

ebooklibonline@outlook.com