PA300 Series Planting Attachments

JOHN DEERE

OPERATORS MANUAL

PA300 Series Planting Attachments

OMA12360 F1 English

OMA12360 F1

LITHO IN U.S.A.
ENGLISH

DCY

OMA12360 F1

to the purchaser

Behind your new planting attachment is an organization that has designed and built farm implements for over 120 years. This planting attachment was built in a John Deere factory by experienced men, many who have worked in this large plant for from ten to forty-five years, thus assuring the utmost in good design, high-grade workmanship, and thorough inspection, so essential to the production of good implements.

High-quality materials, precision production methods, and accurately-controlled heat-treating assure maximum strength and long life for every part.

This manual has been carefully prepared and illustrated so you may make the necessary adjustments for adapting your planting attachment to work properly in practically all types of soil and field conditions. These adjustments, such as row spacings, proper penetration, etc., are fully covered in this manual.

Occasionally your planting attachment may need new parts to replace worn parts, or require emergency service not covered in this manual. If so, we suggest that you take advantage of the facilities offered by your John Deere dealer, which assure you of genuine John Deere Parts and prompt "know-how" service in the field or in the shop.

If you will furnish your dealer with the information which should be recorded at the bottom of this page, when the planting attachment is delivered, he can give you prompt and efficient service.

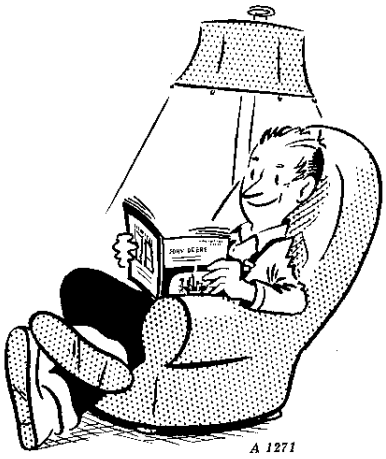

A 1271

Study this manual carefully. Keep it handy, in a safe place, for future reference.

Right- and left-hand sides referred to in this manual are determined from a position at the rear of the machine facing in the direction of travel.

JOHN DEERE PA300 SERIES PLANTING ATTACHMENTS

Planting Attachment No. . . . . .

Date Purchased . . . . . 19 . .

(To be filled in by Purchaser)

contents

	Page
IDENTIFICATION VIEWS	2-4
SPECIFICATIONS	5
OPERATION	6-28
General	6
Preparing the bedder or tool bar	6
Preparing and adjusting tractor	6-9
Preparing the planting attachment	10-12
Planting distances and quantities	13-15
Special seed can equipment	15-16
Adjusting row width	17
Leveling the bedder or tool bar	17
Raising and lowering	17
Depth of planting	17
Press wheels	18-19
Subsoilers and coverers	20-21
Loose ground openers	21
Hard ground openers	22
Lister openers	23-24
"V" wing attachments	24
Insecticide attachment	24-25
Fertilizer attachment	26-27
Causes for common planting difficulties	28
Safety rules	28
MAINTENANCE	29
LUBRICATION	30
ASSEMBLY	31-44
SHIPPING BUNDLES	31-32

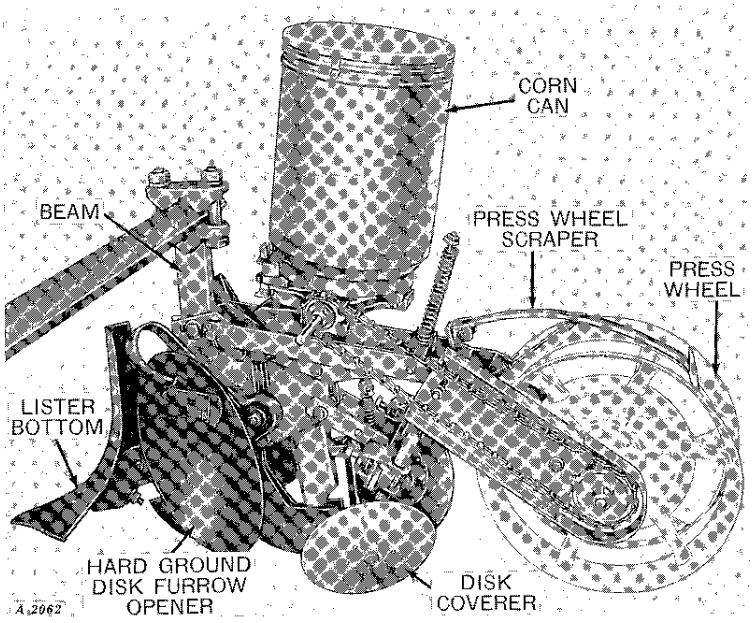

PA302 Press Wheel Drive Planting Attachment

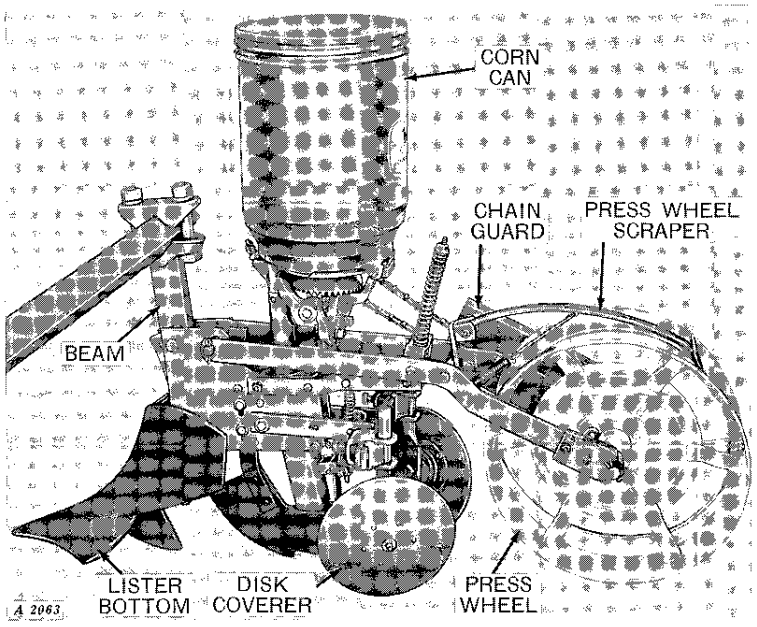

PA303 Press Wheel Drive Planting Attachment

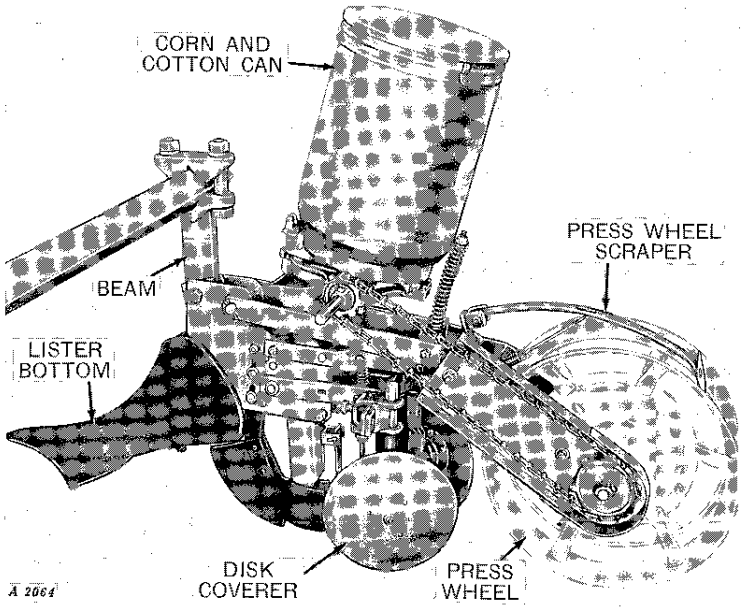

PA304 Press Wheel Drive Planting Attachment

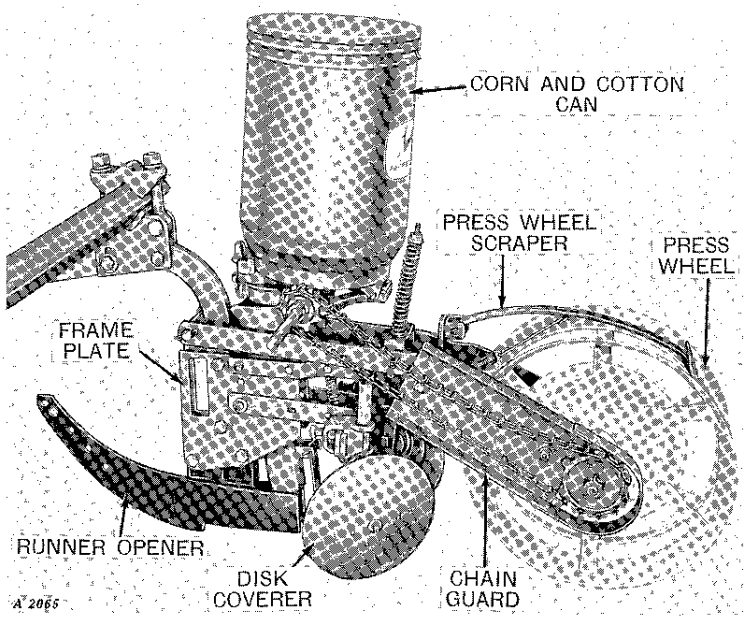

PA307 Press Wheel Drive Planting Attachment

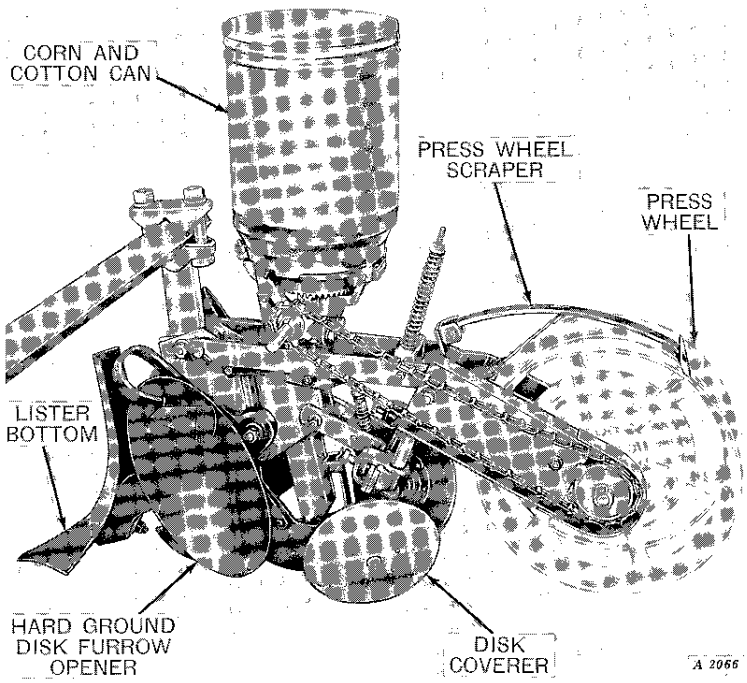

PA309 Press Wheel Drive Planting Attachment

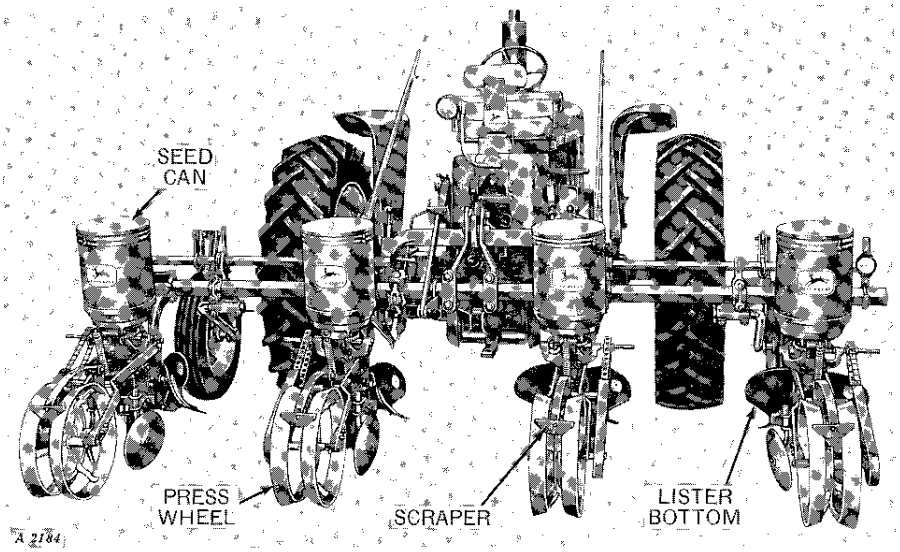

PA300 Series Planting Attachments on F310 Series Bedder

specifications

Types — PA300 Series Press Wheel Drive Planting Attachments:
- PA302—with Corn Cans, Disk Coverers, and Hard Ground Openers.
- PA303—with Corn Cans, Disk Coverers, and Lister Bottoms.
- PA304—with Corn and Cotton Cans, Disk Coverers, and Lister Bottoms.
- PA307—with Corn and Cotton Cans, Disk Coverers, and Long Runner Openers.
- PA309—with Corn and Cotton Cans, Disk Coverers, and Hard Ground Openers.

NOTE: One PA300 Series Planting Attachment provides for two-row planting, two PA300 Attachments for four-row, and three PA300 Attachments for six-row planting.

Row Spacing — Row spacing and number of rows depends on length and type of tool bar.
Type of Drive — Press Wheel Drive, Regular; Open Drive, Special.
Depth Control — Tool Bar Gauge Wheel or Tractor Hydraulic System.
Rubber Tire — Available on order in lieu of scrapers.
Insecticide Attachment — Available on order. Requires rubber tire press wheels.
Shovel Coverers — Available on order in lieu of disk coverers.
Knife Coverers — Available on order in lieu of disk coverers.
Offset Beams — Available on order in lieu or regular beams.
Runner Opener with Boot — Available on order for converting Hard Ground Opener into Loose Ground Opener.
Fertilizer Attachments — No. 62 Two-Row and No. 64 Four-Row available on order.
Safety-Trip Standards — Available on order in lieu of regular standards on PA303 and PA304.
Root Cutters — For PA303, regular; PA304, special.
Cotton Cell Drop Attachment — Available on order for Corn and Cotton Cans.
Unshelled Peanut Attachment — Available on order for Corn and Cotton Cans.
Pea and Bean Attachment — Available on order for Corn and Cotton Cans.
Rubber Cut Off and Baffle Plate — Available on order for Shelled Peanuts.
Brush Cut Off and Baffle Plate — Available on order for Castor Beans.
Vegetable and Grass Seed Cut Off — Available on order.
"V" Wing Attachments — 14- and 26-inch. Available on order.

(Specifications and design subject to change without notice)

operation

General

The John Deere PA300 Series Planting Attachments are self-contained planting units adaptable for use with the F310 and 870 Series Bedders and all 1-3/4 to 2-1/4-inch square tool bars.

Each planting unit is driven by its own press wheel assuring accurate planting regardless of tractor wheel slippage.

These planting attachments have short straight-drop seed tubes to prevent bunching of seed. All types of covering equipment available assure uniform depth of soil over the seed.

These planting attachments may be used for surface planting, bed planting, and furrow planting, depending on the type of planting units used.

The planting attachments and bedder or tool bar are fully tractor carried when lifted, but have ample flexibility to follow the contour of the ground when working.

Preparing the bedder or tool bar

Refer to the bedder or tool bar operator's manual for proper use of lift springs, centering bar, and gauge wheels.

Preparing and adjusting tractor

For complete operating instructions concerning the tractor refer to the tractor operator's manual.

Belt pulley

The belt pulley must be removed from the tractor, if the tractor is so equipped.

Tire pressure

Consult your tractor operator's manual for front and rear tire pressure.

Rear wheel tread

If two or four units are being used, set the tractor wheel tread as nearly as possible twice the distance of the row width. For example: for 40-inch row widths, set the tractor wheel tread at 80 inches.

1010, 430, 420, or 40 series tractors

Rockshaft lift arms

Adjust the tractor hydraulic system so integral cylinders are parallel and the lift arms operate together. See tractor operator's manual.

Load-and-depth control system

These planting attachments are used with the Load-and-Depth Control action of the tractor locked out. To lock out the load control action, turn the load control screw out against the yoke.

Lift links

Attach the lift links to the inner holes on the rockshaft lift arms.

Set the length of the left-hand lift link as recommended in the tractor operator's manual.

The right-hand lift link provides adjustment for leveling the tool bar.

Sway chains

Pin the sway stop chains to the outer holes on each side of the center hole in the drawbar bracket.

2010 series tractors

Sway blocks

When the planting attachments are used with the F310 or 870 Series Bedders, set the sway blocks in transport lock position. Side sway during field operation is controlled by the centering bar.

When the planting attachments are used on tool bars without a centering bar, sway blocks must be attached in the wide position to eliminate all side sway except for contour planting.

Rockshaft lift arms

Adjust tractor hydraulic system so integral cylinders are parallel and the lift arms operate together. See tractor operator's manual.

Setting the selector lever

Set the Load-and-Depth Control selector lever in the "D" position.

Lift links

Adjust the lift links for transport clearance and lateral float. See tractor operator's manual.

3010 and 4010 series tractors

Sway blocks

When the planting attachments are used with the F310 or 870 Series Bedders, set the sway blocks in transport lock position. Side sway during field operation is controlled by the centering bar.

When the planting attachments are used on tool bars without a centering bar, sway blocks must be attached in the wide position to eliminate all side sway except for contour planting.

Lift links

Adjust the lift links for transport clearance and lateral float. See tractor operator's manual.

Setting the selector lever

Set the selector lever in the "D" position.

Adjusting speed of rockshaft drop

Set the speed of the rockshaft drop on tractors on which the rockshaft and implement drop can be regulated. Adjust the valve to give a smooth slow drop of the planting attachments.

NOTE: The planting attachments should be lowered to working position slow enough so the seed tubes do not become plugged with dirt.

Front end weighting

Front end stability is necessary for efficient operation and safety. Therefore, it is important that weight be added to the front end of the tractor. The following table gives recommended front end weighting when PA300 Series Planting Attachments are used on F310 and 870 Series Bedders. No front end weighting is required when the PA300 Series Planting Attachments are used on the F310 Two-Row Bedder or on the F310 Two-Row Bedder with 62 Fertilizer Attachment.

	F310 Bedder Four-Row	870 Bedder with 62 Fertilizer Attachment Two-Row	870 Bedder with 64 Fertilizer Attachment Four-Row	870 Bedder Four-Row
2010R Tractors	425	Not Recommended	Not Recommended	Not Recommended
2010RU Tractors	425	Not Recommended	Not Recommended	Not Recommended
3010R Tractors:				
Single Front Wheel	550	200	Not Recommended	600
Dual Front Wheel with Roll-O-Matic	450	100	Not Recommended	500
Adjustable Front Axle	150	0	Not Recommended	200
3010RU Tractors:				
Adjustable Front Axle-Long Wheel Base	100	0	Not Recommended	50
Adjustable Front Axle-Short Wheel Base	250	0	Not Recommended	250
Fixed Front Axle-Long Wheel Base	50	0	Not Recommended	0
Fixed Front Axle-Short Wheel Base	200	0	Not Recommended	200
3010S Tractors:				
Adjustable Front Axle	400	0	Not Recommended	400
Fixed Front Axle	300	0	Not Recommended	350
4010R Tractors:				
Single Front Wheel	Not Recommended	0	250	250
Dual Front Wheel with Roll-O-Matic	Not Recommended	0	250	200
Adjustable Front Axle	Not Recommended	0	0	0

Front end weights - Continued

	870 Bedder with 62 Fertilizer Attachment Two-Row	870 Bedder Two-Row	870 Bedder Four-Row	870 Bedder with 64 Fertilizer Attachment Four-Row
530 and 520 Tractors:				
Single Front Wheel	870	520	Not Recommended	Not Recommended
Dual Front Wheel with Roll-O-Matic	820	470	Not Recommended	Not Recommended
Adjustable Front Axle	585	235	Not Recommended	Not Recommended
630 and 620 Tractors:				
Single Front Wheel	435	85	915	Not Recommended
Dual Front Wheels with Roll-O-Matic	345	0	825	Not Recommended
Adjustable Front Axle	155	0	635	Not Recommended
730 and 720 Gasoline Tractors:				
Single Front Wheel	310	0	790	880
Dual Front Wheel with Roll-O-Matic	210	0	690	780
Adjustable Front Axle	10	0	490	580
730 and 720 Diesel Tractors:				
Single Front Wheel	210	0	690	780
Dual Front Wheels with Roll-O-Matic	110	0	590	680
Adjustable Front Axle	0	0	390	480

Preparing the planting attachment

Planting cotton with picker wheel

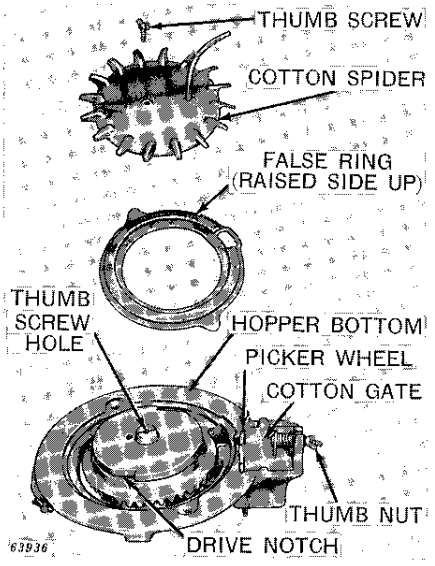

When using the PA304, PA307, or PA309 Planting Attachments to plant cotton, remove the corn cut-off from the hopper by unscrewing the thumb screw which holds it in place.

Place the false ring in hopper with the **raised side up.**

Install the cotton spider and hold it in place with the thumb screw. The hole in the cotton spider is off to one side of center and lines up with the thumb screw hole in the hopper bottom. The drive lugs on the cotton spider must engage the drive notches on the hopper bottom.

The quantity of cotton planted is regulated by the cotton gate. To increase the quantity of seed planted, turn the thumb nut to the right which will open the cotton gate. To decrease the quantity of seed planted, turn the thumb nut to the left.

For best results use the large sprocket on the press wheel shaft and the small sprocket on the hopper drill shaft. This will drive the picker wheel at its fastest speed.

Planting corn, acid-delinted cotton, and all other seeds

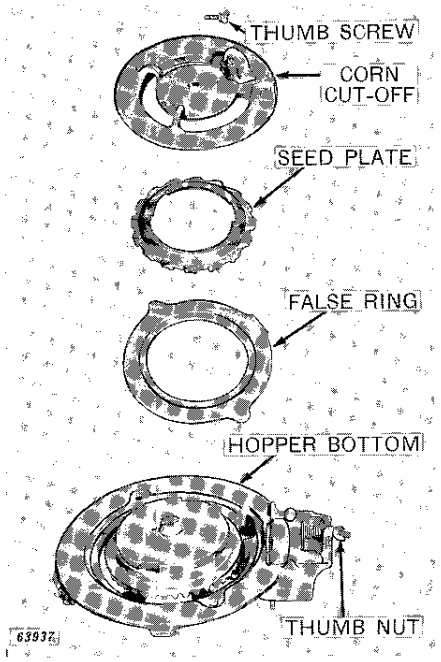

Remove the cotton spider.

Install false ring with **raised side up** when planting small seed such as: feterita, sorghum, etc. If corn, acid delinted cotton, or other large seeds are to be planted, install the false ring with **flat side up.**

NOTE: Some seed plates require special false rings. See seed plate chart on page 12.

Install seed plate.

Install corn cut-off and fasten in place with the thumb screw. The cut-off must fit tightly against the false ring.

Thank you so much for reading.

Please click the “Buy Now!” button below to download the complete manual.

After you pay.

You can download the most perfect and complete manual in the world immediately.

Our support email:

ebooklibonline@outlook.com