JOHN DEERE
WORLDWIDE COMMERCIAL & CONSUMER EQUIPMENT DIVISION

Garden Tractor
GX355

OMM152807 H4

OPERATOR'S MANUAL

JOHN DEERE

North American Version
Litho in U.S.A.

INTRODUCTION

Thank You for Purchasing a John Deere Product

We appreciate having you as a customer and wish you many years of safe and satisfied use of your machine.

Using Your Operator's Manual

This manual is an important part of your machine and should remain with the machine when you sell it.

Reading your operator's manual will help you and others avoid personal injury or damage to the machine. Information given in this manual will provide the operator with the safest and most effective use of the machine. Knowing how to operate this machine safely and correctly will allow you to train others who may operate this machine.

If you have an attachment, use the safety and operating information in the attachment operator's manual along with the machine operator's manual to operate the attachment safely and correctly.

This manual and safety signs on your machine may also be available in other languages (see your authorized dealer to order).

Sections in your operator's manual are placed in a specific order to help you understand all the safety messages and learn the controls so you can operate this machine safely. You can also use this manual to answer any specific operating or servicing questions. A convenient index located at the end of this book will help you to find needed information quickly.

The machine shown in this manual may differ slightly from your machine, but will be similar enough to help you understand our instructions.

RIGHT-HAND and LEFT-HAND sides are determined by facing in the direction the machine will travel when going forward. When you see a broken line (------), the item referred to is hidden from view.

Before delivering this machine, your dealer performed a predelivery inspection to ensure best performance.

Special Messages

Your manual contains special messages to bring attention to potential safety concerns, machine damage as well as helpful operating and servicing information. Please read all the information carefully to avoid injury and machine damage.

CAUTION: Avoid injury! This symbol and text highlight potential hazards or death to the operator or bystanders that may occur if the hazards or procedures are ignored.

IMPORTANT: Avoid damage! This text is used to tell the operator of actions or conditions that might result in damage to the machine.

NOTE: General information is given throughout the manual that may help the operator in the operation or service of the machine.

Attachments for Your Machine

There's a John Deere attachment or kit to make your new machine perform more tasks or be more versatile, whether your machine is a lawn tractor or compact utility tractor or a utility vehicle.

You can check out the entire line of attachments for your machine at JohnDeere.com or ask your John Deere dealer. From aerators to electric lift kits to tillers, there's a John Deere attachment or kit to fill every need.

PRODUCT IDENTIFICATION

Record Identification Numbers

Garden Tractor

GX355 PIN (120001 -)

If you need to contact an Authorized Service Center for information on servicing, always provide the product model and serial number.

You will need to locate the model and serial number for the machine and for the engine of your machine and record the information in the spaces provided below.

DATE OF PURCHASE:

_____

DEALER NAME:

_____

DEALER PHONE:

_____

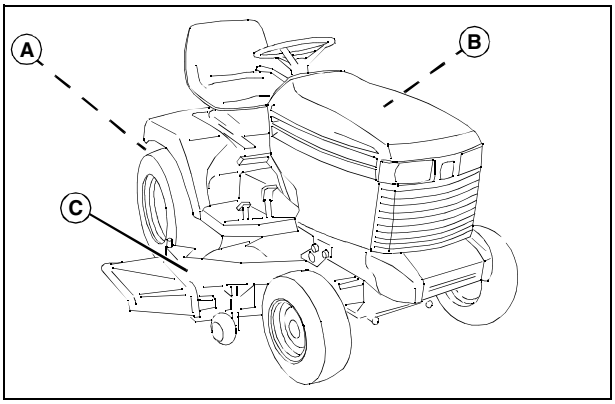

MIF

PRODUCT IDENTIFICATION NUMBER (A):

__ __ __ __ __ __ __ __ __ __ __ __ __ __ __ __ __

ENGINE SERIAL NUMBER (B):

__ __ __ __ __ __ __ __ __ __ __ __ __ __ __ __ __

MOWER DECK SERIAL NUMBER (C):

__ __ __ __ __ __ __ __ __ __ __ __ __ __ __ __ __

TABLE OF CONTENTS

Safety Labels 1
Safety 4
Operating 12
Replacement Parts 27
Service Intervals 28
Service Lubrication 29
Service Engine 31
Service Transmission 38
Service Mower 41
Service Electrical 48
Service Miscellaneous 52
Troubleshooting 59
Storage 63
Specifications 65
Warranty 67
Index 70

All information, illustrations and specifications in this manual are based on the latest information at the time of publication. The right is reserved to make changes at any time without notice.

OMM152807 H4 - English

SAFETY LABELS

Understanding The Machine Safety Labels

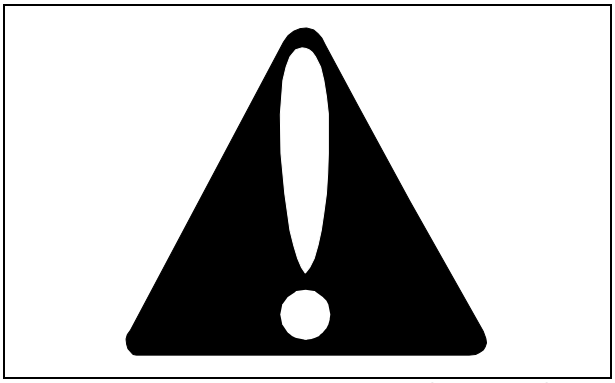

Safety-Alert Symbol

The machine safety labels shown in this section are placed in important areas on your machine to draw attention to potential safety hazards.

On your machine safety labels, the words DANGER, WARNING, and CAUTION are used with this safety-alert symbol. DANGER identifies the most serious hazards.

The operator's manual also explains any potential safety hazards whenever necessary in special safety messages that are identified with the word, CAUTION, and the safety-alert symbol.

WARNING AVOID SERIOUS INJURY OR DEATH

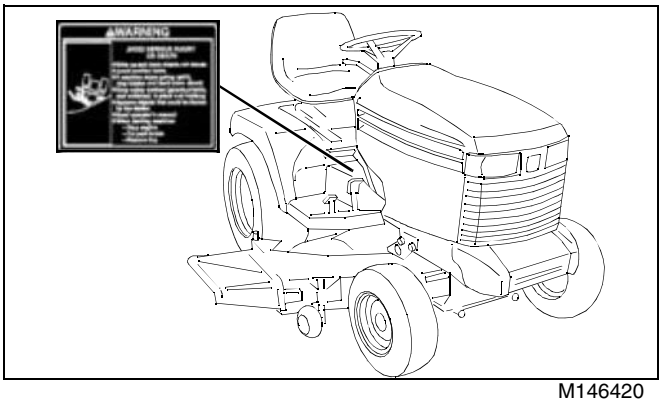

M146420

- Drive up and down slopes, not across
- Avoid sudden turns
- If machine stops going uphill, stop blade and back down slowly
- Keep safety devices (guards, shields, and switches) in place and working
- Read operator's manual
- When leaving machine:
  - Stop engine
  - Set park brake
  - Remove key

DANGER ROTATING BLADES CUT OFF ARMS AND LEGS

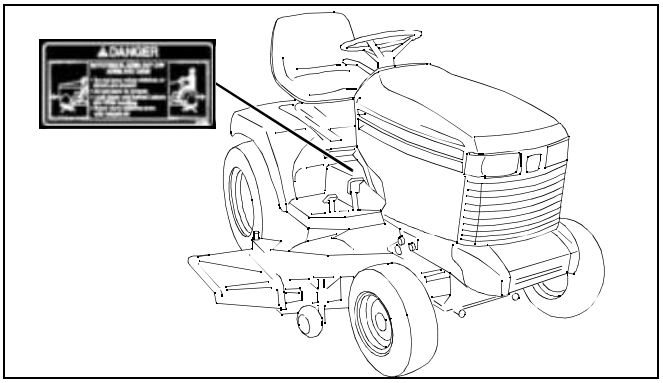

M146420

- Do not mow when children or others are around
- Do not mow in reverse
- Look down and behind before and while backing
- Never carry children even with blades off

WARNING HOT SURFACE

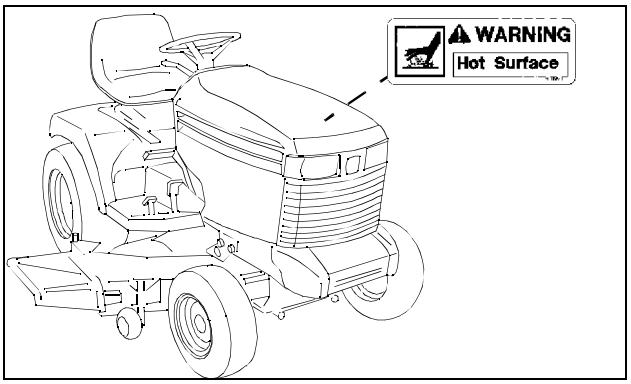

M118611

Thank you so much for reading.

Please click the “Buy Now!” button below to download the complete manual.

Buy Now

After you pay.

You can download the most perfect and complete manual in the world immediately.

Our support email:

ebooklibonline@outlook.com