8450-8650 Tractors

JOHN DEERE

TECHNICAL MANUAL

8450-8650
Tractors

TM1355 (01MAY86) English

TM1355 (01MAY86)

LITHO IN U.S.A.
ENGLISH

D C G
TM1355 01MAY86

8450 - 8650 TRACTORS TECHNICAL MANUAL TM-1355 (DEC-85)

CONTENTS—REPAIR SECTIONS

PUBLICATION NUMBER CHANGE

This technical manual was formerly TM-1255. The number was changed to TM-1355 when engine information was removed. Some pages still carry the old publication number. For engine information, refer to engine component technical manual, CTM-1, 6466 Engines. This machine technical manual covers removal and installation of the engine components. The component manual covers basic repair of the engine.

SECTION 10—GENERAL
- Group 00—Specification and Special Tools
- Group 05—Predelivery, Delivery and After-Sale Services
- Group 10—Tune-up
- Group 15—Lubrication

SECTION 15—SEPARATION
- Group 00—Specifications and Special Tools
- Group 05—Front Drive
- Group 10—Fuel Tanks and Fenders
- Group 15—Front End
- Group 20—Front End and Engine From Clutch Housing
- Group 25—Engine
- Group 30—SOUND-GARD® Body
- Group 35—Front Hinge From Rear Hinge
- Group 40—Front Hinge
- Group 45—Clutch Housing
- Group 50—Rear Hinge
- Group 55—Torque Divider
- Group 60—Transmission
- Group 65—Final Drives

SECTION 20—ENGINE REPAIR
- Group 01—6619A Specifications and Special Tools
- Group 05—Acquire Access to Cylinder Head, Valves and Camshaft
- Group 11—6619A Cylinder Head, Valves and Camshaft
- Group 15—Acquire Access to Cylinder Block, Liners, Pistons and Rods
- Group 21—6619A Cylinder Block, Liners, Pistons and Rods
- Group 25—Acquire Access to Crankshaft, Main Bearings and Flywheel
- Group 31—6619A Crankshaft, Main Bearings and Flywheel
- Group 35—Acquire Access to Lubrication System
- Group 41—6619A Lubrication System
- Group 45—Acquire Access to Cooling System
- Group 51—6619A Cooling System

SECTION 30—FUEL AND AIR SYSTEM REPAIR
- Group 00—Specifications and Special Tools
- Group 05—Acquire Access to Air Intake System
- Group 10—Air Intake System
- Group 15—Acquire Access to Diesel Fuel System
- Group 20—Diesel Fuel System
- Group 25—Speed Control Linkage

SECTION 40—ELECTRICAL REPAIR
- Group 00—Specifications and Special Tools
- Group 05—Harness Replacement
- Group 06—Connector Repair
- Group 10—John Deere Charging Circuit
- Group 15—Starter Circuit Repair
- Group 20—John Deere Starter Repair
- Group 21—DELCO-REMY Starter Repair
- Group 25—Lighting Circuit
- Group 30—INVESTIGATOR II™ Warning System and Digital Tach. Repair
- Group 35—Accessory Circuits

U10;010GEN AX1 281085

CONTENT—CONTINUED

SECTION 50—POWER TRAIN REPAIR
Group 00—Specifications and Special Tools
Group 05—Remove/Install Clutch Oil Pressure Valve Housing
Group 10—Clutch Oil Pressure Regulating Valve Housing
Group 15—Clutch Operating Piston Housing
Group 20—PERMA CLUTCH™
Group 25—QUAD-RANGE™ Planetary
Group 30—Independent PTO
Group 35—Torque Divider and Drive Shafts
Group 40—QUAD-RANGE™ Transmission
Group 45—Shift Lever Assembly
Group 50—Front Differential
Group 55—Rear Differential Housing
Group 60—Differential Lock Valves
Group 65—Final Drives
Group 70—Transmission Oil Filter Relief Valve Housing
Group 75—Transmission Oil Cooler and Thermal Relief Valve

SECTION 60—STEERING/BRAKES REPAIR
Group 00—Specifications and Special Tools
Group 05—Remove/Install Power Steering Components
Group 10—Steering Column
Group 15—Metering Pump
Group 20—Steering Valve
Group 25—Steering and Feedback Cylinders
Group 30—Remove/Install Brake Valve and Brake Accumulator
Group 35—Brake Valve
Group 40—Brake Accumulator
Group 45—Bleeding Brakes and Testing Brake Accumulator
Group 50—Brake Pistons, Plates, and Disks

SECTION 70—HYDRAULIC REPAIR
Group 00—Specifications and Special Tools
Group 05—Charge Pump Assembly
Group 10—Remove/Install Main Hydraulic Pump
Group 15—Main Hydraulic Pump
Group 20—Remove/Install Charge Circuit Valves and Attenuator
Group 25—Charge Pump Control Valve
Group 30—Hydraulic Filter Relief Valve Housing
Group 35—Remove/Install HYDRA-CUSHIONED™ Seat Valve Assembly and Accumulator
Group 40—Seat Valve Assembly
Group 45—Remove and Install Pressure Control Valve
Group 50—Pressure Control Valve
Group 55—Remove/Install Rockshaft Components
Group 60—Rockshaft Components
Group 65—Lift Assist Cylinders
Group 70—Draft Sensing Cylinders
Group 75—Hitch Components
Group 80—Remove/Install Selective Control Valves and Controls
Group 85—Selective Control Valve and Coupler
Group 90—Remote Cylinder
Group 95—Transmission-Hydraulic System Clean-up Procedure

SECTION 80—MISCELLANEOUS REPAIR
Group 00—Specifications and Special Tools
Group 05—Wheels
Group 10—Hinge Pins
Group 15—Front Weight

SECTION 90—OPERATOR STATION REPAIR
Group 00—Specifications and Special Tools
Group 05—Air Conditioning System
Group 06—Air Conditioning System Service
Group 10—Heating System
Group 15—HYDRACUSHIONED Seat
Group 20—Miscellaneous Components

SECTION 95—MISCELLANEOUS OPTIONS
Group 00—Specifications and Special Tools
Group 40—Auxiliary Lighting
Group 60—Auxiliary Steering System
Group 61—Auxiliary Brake System
Group 62—Auxiliary Trailer Brake
Group 63—Miscellaneous Options

U10;010GEN BX1 280283

SAFETY AND YOU

This is the safety-alert symbol. When you see this symbol on the machine or in this manual, be alert to the potential for personal injury .

AB6;T81389 053;TMSAFE 071085

IMPORTANT

The **IMPORTANT** message identifies potential problems which may cause consequential damage to tractor. Following recommended procedure will instruct technician how to avoid problem.

U10;010INT D 101281

NOTES

The word *NOTE* is followed by a statement that identifies a qualification or exception to a previous statement. A "NOTE" may also identify nice-to-know information pertinent to, but not directly related to previous statement.

U10;010INT E 101281

STAY CLEAR OF MOVING TRACTOR

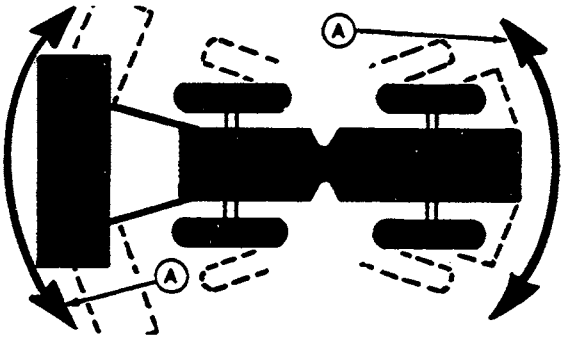

Always place transmission in PARK before dismounting. Leaving transmission in gear with engine stopped will NOT prevent the tractor from moving.

Be sure everyone is clear of tractor and attached equipment before starting engine or moving steering wheel. Tractor and equipment move (A), even with transmission in PARK. Some steering movement often occurs as engine starts.

Never try to get on or off a moving tractor.

When tractor is left unattended, lower implements to the ground, stop the engine, and remove the key.

AJ7;RW8078 U01;STAY CLEAR1 281085

SHIFT TO LOW GEAR ON HILLS

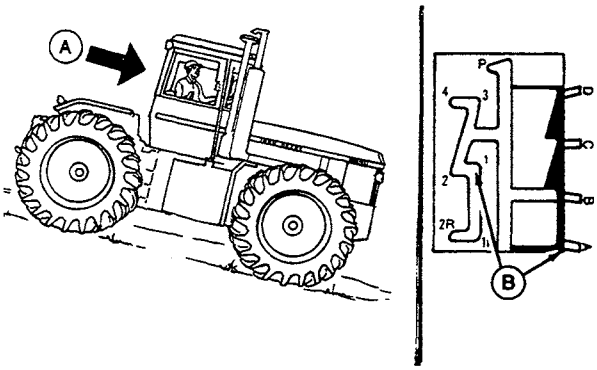

Shift to a low gear (B) before descending a steep hill (A), to improve your control of the tractor with little or no braking. Never coast downhill.

When driving on icy or graveled surfaces, reduce speed and be sure tractor is properly ballasted to avoid skidding and loss of steering control.

Additional ballast may be needed for transporting heavy integral implements. When implement is raised, drive slowly over rough ground, regardless of how much ballast is used.

AJ7;RW4421 U01;DRIVE SAFE 281085

KEEP RIDERS OFF MACHINE

Only allow the operator on the machine. Keep riders off.

Riders on machine are subject to injury such as being struck by foreign objects and being thrown off of the machine. Riders also obstruct the operator's view resulting in the machine being operated in an unsafe manner.

AB6;TS173 053;RIDER 261184

USE SEAT BELT PROPERLY

Use a seat belt when you operate with a roll-over protective structure (ROPS) to minimize chance of injury from an accident such as an overturn.

Do not use a seat belt if operating without a ROPS.

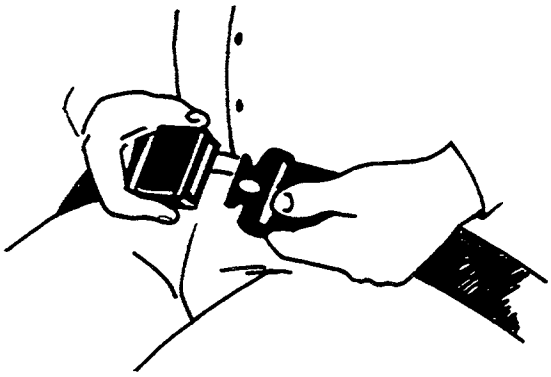

AB6;TS175 053;ROPS1 261184

KEEP ROPS INSTALLED PROPERLY

Make certain all parts are reinstalled correctly if the roll-over protective structure (ROPS) is loosened or removed for any reason. Tighten mounting bolts to proper torque.

The protection offered by ROPS will be impaired if ROPS is subjected to structural damage, is involved in an overturn incident, or is in any way altered. A damaged ROPS should be replaced, not reused.

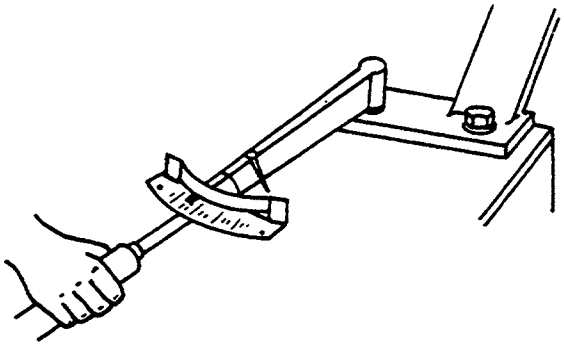

AB6;TS176 053;ROPS3 261184

PREVENT MACHINE RUNAWAY

Avoid possible injury or death from machinery runaway.

Do not start engine by shorting across starter terminals. Machine will start in gear if normal circuitry is by passed.

NEVER start engine while standing on ground. Start engine only from operator's seat, with transmission in neutral or park.

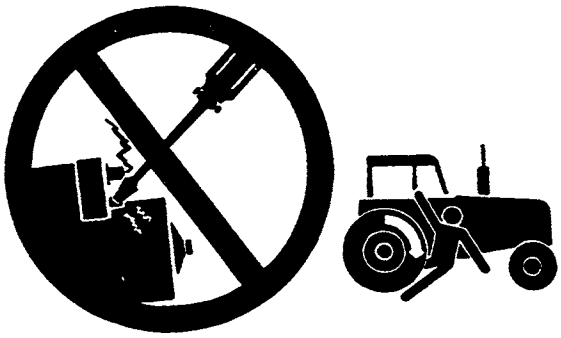

AB6;TS177 053;BYPAS1 210585

Thank you so much for reading.

Please click the “Buy Now!” button below to download the complete manual.

Buy Now

After you pay.

You can download the most perfect and complete manual in the world immediately.

Our support email:

ebooklibonline@outlook.com